VOLUME 1 OF 2
TECHNICAL SPECIFICATIONS

WASTEWATER TREATMENT PLANT 2 SOLIDS HANDLING IMPROVEMENTS RIO RANCHO, NM

Prepared for:
The City of Rio Rancho

THE CITY OF VISION

May 2020

Prepared by

AECOM
One Park Square, 6501 Americas Pkwy NE, Suite 900
Albuquerque, NM 87110

Project No. WW2030

RIPAN K. SAHA
NEW MEXICO
24260
PROFESSIONAL ENGINEER
5/22/2020

Table of Contents

DIVISION 08 – OPENINGS

08 11 00	METAL DOORS & FRAMES
08 33 23	OVERHEAD COILING DOORS
08 51 13	ALUMINUM WINDOWS
08 71 00	FINISH HARDWARE
08 91 00	LOUVERS AND VENTS

DIVISION 09 – FINISHES

09 29 00	DRYWALL CONSTRUCTION
09 51 13	ACCOUSTICAL PANEL CEILINGS
09 65 19	RESILIENT FLOORING-BASE ACCESSORIES
09 90 00	PROCESS PAINTING AND COATING
09 90 10	BUILDING PAINTING AND COATING

DIVISION 22 – PLUMBING

22 05 23	GENERAL-DUTY VALVES FOR PLUMBING PIPING
22 05 29	HANGERS AND SUPPORTS FOR PLUMBING PIPING AND EQUIPMENT
22 07 00	PLUMBING INSULATION
22 11 16	DOMESTIC WATER PIPING
22 13 16	SANITARY WASTE AND VENT PIPING
22 45 00	EMERGENCY PLUMBING FIXTURES

DIVISION 23 – HEATING, VENTILATING, AND AIR CONDITIONING (HVAC)

23 05 13	COMMON MOTOR REQUIREMENTS FOR HVAC EQUIPMENT
23 05 29	HANGERS AND SUPPORTS FOR HVAC PIPING AND EQUIPMENT
23 05 48	VIBRATION CONTROLS FOR HVAC PIPING AND EQUIPMENT
23 05 93	PRESSURE TESTING OF DUCTED SYSTEM
23 09 10	HVAC INSTRUMENTATION AND CONTROLS
23 11 23	FACILITY NATURAL GAS PIPING
23 23 00	REFRIGERANT PIPING
23 31 13	METAL DUCTS
23 33 00	AIR DUCT ACCESSORIES
23 34 13	AXIAL HVAC FANS
23 37 13	DIFFUSERS, REGISTERS, AND GRILLES
23 55 33	GAS-FIRED UNIT HEATERS
23 81 26	VRF AND HEAT PUMP SYSTEMS

DIVISION 26 - ELECTRICAL

26 05 10	ELECTRICAL WORK – GENERAL
26 05 20	ELECTRIC WIRES AND CABLES
26 05 26	GROUNDING AND BONDING FOR ELECTRICAL SYSTEMS
26 05 29	HANGERS AND SUPPORTS FOR ELECTRICAL SYSTEM
26 05 33	RACEWAY AND BOXES FOR ELECTRICAL SYSTEMS
26 05 53	ELECTRICAL IDENTIFICATION
26 08 13	FIELD INSPECTION AND ACCEPTANCE TESTS
26 22 14	DRY-TYPE TRANSFORMERS
26 24 16	PANELBOARDS
26 27 26	WIRING DEVICES

SECTION 01 11 00

SUMMARY OF WORK

PART 1 - GENERAL

1.01 SUMMARY:

A. Section Includes:

1. Project information.
2. Work covered by Contract Documents.
3. Access to site.
4. Coordination with Plant Operators.
5. Specification and drawing conventions.

1.02 PROJECT INFORMATION:

A. Owner's Representative: Arnell Friedt, phone: 505-896-8242

B. Engineer: Ripan Saha, phone: 505-855-7425

C. Project Location: City of Rio Rancho Wastewater Treatment Plant #2
100 Industrial Park Loop NE,
Rio Rancho, NM 87124.

1.03 WORK COVERED BY CONTRACT DOCUMENTS:

A. The Work of Project is defined by the Contract Documents and consists of the following:

1. Rehabilitate wastewater treatment plant dewatering system by replacing existing belt filter press, polymer mixing system and tanks (Totes), DIP sludge feed pipe, flow splitting method and control panels.
2. Remove and replace existing Heating, Ventilating, and Air Conditioning (HVAC) system.
3. Remove and replace existing exterior metal wall panels to 7’-4” above finished floor level, and replace with CMU wall.
4. Remove and replace existing windows and doors as indicated on the drawing.
5. Rehabilitate existing office building both on first and second floor.

6. Replace existing lighting and receptacles throughout the facility.

7. Install new lighting and recepatacles in new office fitout.

8. Upgrade existing electrical system to facilitate the installation of new HVAC and office area.

1.04 ACCESS TO SITE:

A. General: Contractor shall have limited use of Project site for construction operations as indicated on Drawings by the Contract limits and as indicated by requirements of this Section.

B. Use of Site: Limit use of Project site to work in areas indicated in drawings. Do not disturb portions of Project site beyond areas in which the Work is indicated.

1. Driveways, Walkways and Entrances: Keep driveways, truck loading bay, and entrances serving premises clear and available to Owner, Owner's employees, and emergency vehicles at all times. Do not use these areas for parking or storage of materials.

a. Schedule deliveries to minimize use of driveways and entrances by construction operations.

b. Schedule deliveries to minimize space and time requirements for storage of materials and equipment on-site.

1.05 COORDINATION WITH PLANT OPERATORS:

A. Full Owner Occupancy: Owner will occupy site and existing buildings during entire construction period. Cooperate with Owner during construction operations to minimize conflicts and facilitate Owner usage. Perform the Work so as not to interfere with Owner’s day-to-day operations. Maintain existing exits unless otherwise indicated.

1. Maintain access to existing walkways, corridors, and other adjacent occupied or used facilities. Do not close or obstruct walkways, corridors, or other occupied or used facilities without written permission from Owner and approval of authorities having jurisdiction.

2. Notify Owner not less than 72 hours in advance of activities that will affect Owner's operations.

B. Partial Owner Occupancy: Owner will occupy the premises during entire construction period, with the exception of areas under construction. Cooperate with Owner during construction operations to minimize conflicts and facilitate Owner usage. Perform the Work so as not to interfere with Owner's operations. Maintain existing exits unless otherwise indicated.

1. Maintain access to existing walkways, corridors, and other adjacent occupied or used facilities. Do not close or obstruct walkways, corridors, or other occupied or used facilities without written permission from Owner and authorities having jurisdiction.

2. Notify Owner not less than 72 hours in advance of activities that will affect Owner's operations.

1.06 SPECIFICATION AND DRAWING CONVENTIONS:

A. Specification Content: The Specifications use certain conventions for the style of language and the intended meaning of certain terms, words, and phrases when used in particular situations. These conventions are as follows:

1. Imperative mood and streamlined language are generally used in the Specifications. The words "shall," "shall be," or "shall comply with," depending on the context, are implied where a colon (:) is used within a sentence or phrase.

2. Specification requirements are to be performed by Contractor unless specifically stated otherwise.

B. Division 01 General Requirements: Requirements of Sections in Division 01 apply to the Work of all Sections in the Specifications.

C. Drawing Coordination: Requirements for materials and products identified on Drawings are described in detail in the Specifications. One or more of the following are used on Drawings to identify materials and products:

1. Terminology: Materials and products are identified by the typical generic terms used in the individual Specifications Sections.

2. Abbreviations: Materials and products are identified by abbreviations published as part of the U.S. National CAD Standard and scheduled on Drawings.

3. Keynoting: Materials and products are identified by reference keynotes referencing Specification Section numbers found in the Contract Documents.

1.07 CONSTRUCTION SQUENCE

Below is a suggested construction sequence for one belt press replacement. Contractor shall submit construction sequence plan to the owner and engineer for review and approval in the pre-construction meeting.

1. Office building and polymer room rehab (Structural, HVAC, Electrical and finishing).

2. Remove and replace existing dewatering building wall up to 7’ from grade, remove concrete curb and exixting tool room.

3. Install new sludge feed pipe up to flow splitter and connect to new polymer system.

4. Install temporary dewatering system with sludge feed pump and polymer system.

5. Demolish existing belt filter press #1 control panel, existing platform and existing belt filter press #1.

6. Remove existing polymer system and sludge feed pipe, and switch to new one.

7. Relocation of existing control panel and Electrical works for BFP #2 and Install new control panel and electrical works for BFP #1.

8. Remove floor coating, Remove concrete and existing drains, Install new trench drains and concrete, Install new grout to slope floor, Install new floor coating, (suggest removing and replacing concrete pedestals at this time).

9. Install new belt filter press #1.

10. Install new platform.

Maximum dewatering building shutdown shall be 45 days.

PART 2 - PRODUCTS

(Not Used)

PART 3 - EXECUTION

(Not Used)

END OF SECTION

SECTION 01 29 00

PAYMENT PROCEDURES

PART 1 - GENERAL

1.01 SUMMARY

A. Section includes administrative and procedural requirements necessary to prepare and process Applications for Payment.

1.02 DEFINITIONS

A. Schedule of Values: A statement furnished by Contractor allocating portions of the Contract Sum to various portions of the Work and used as the basis for reviewing Contractor's Applications for Payment.

1.03 SCHEDULE OF VALUES

A. Coordination: Coordinate preparation of the schedule of values with preparation of Contractor's construction schedule.
   1. Coordinate line items in the schedule of values with other required administrative forms and schedules, including the following:
      a. Application for Payment forms with continuation sheets.
      b. Submittal schedule.
      c. Items required to be indicated as separate activities in Contractor's construction schedule.
   2. Submit the schedule of values to the Owner and Engineer at earliest possible date, but no later than seven days before the date scheduled for submittal of initial Applications for Payment.

B. Format and Content: Use Project Manual table of contents as a guide to establish line items for the schedule of values. Provide at least one-line item for each Specification Section.
   1. Identification: Include the following Project identification on the schedule of values:
      a. Project name and location.
      b. Name of Engineer.
      c. Engineer's project number.
      d. Contractor's name and address.
      e. Date of submittal.
   2. Arrange the schedule of values in tabular form with separate columns to indicate the following for each item listed:
      a. Related Specification Section or Division.

b. Description of the Work.
c. Name of subcontractor.
d. Name of manufacturer or fabricator.
e. Name of supplier.
f. Change Orders (numbers) that affect value.
g. Dollar value of the following, as a percentage of the Contract Sum to nearest one-hundredth percent, adjusted to total 100 percent.
    1) Labor.
    2) Materials.
    3) Equipment.

3. Provide a breakdown of the Contract Sum in enough detail to facilitate continued evaluation of Applications for Payment and progress reports. Coordinate with Project Manual table of contents. Provide multiple line items for principal subcontract amounts in excess of five percent of the Contract Sum.
4. Round amounts to nearest whole dollar; total shall equal the Contract Sum.
5. Provide a separate line item in the schedule of values for each part of the Work where Applications for Payment may include materials or equipment purchased or fabricated and stored, but not yet installed.
6. Provide separate line items in the schedule of values for initial cost of materials, for each subsequent stage of completion, and for total installed value of that part of the Work.
7. Each item in the schedule of values and Applications for Payment shall be complete. Include total cost and proportionate share of general overhead and profit for each item.
8. Schedule Updating: Update and resubmit the schedule of values before the next Applications for Payment when Change Orders or Construction Change Directives result in a change in the Contract Sum.

1.04 APPLICATIONS FOR PAYMENT

A. Each Application for Payment following the initial Application for Payment shall be consistent with previous applications and payments as certified by Engineer and paid for by Owner.
    1. Initial Application for Payment, Application for Payment at time of Substantial Completion, and final Application for Payment involve additional requirements.

B. Payment Application Times: The date for each progress payment is indicated in the Agreement between Owner and Contractor. The period of construction work covered by each Application for Payment is the period indicated in the Agreement.

C. Application for Payment Forms: Use AIA Document G702 and AIA Document G703 as form for Applications for Payment.

D. Application Preparation: Complete every entry on form. Notarize and execute by a person authorized to sign legal documents on behalf of Contractor. Engineer/Owner will return incomplete applications without action.

1. Entries shall match data on the schedule of values and Contractor's construction schedule. Use updated schedules if revisions were made.
2. Include amounts for work completed following previous Application for Payment, whether or not payment has been received. Include only amounts for work completed at time of Application for Payment.
3. Include amounts of Change Orders and Construction Change Directives issued before last day of construction period covered by application.
4. Indicate separate amounts for work being carried out under Owner-requested project acceleration.

E. Stored Materials: Payment will not be provided for Stored Materials.

F. Transmittal: Submit three signed and notarized original copies of each Application for Payment to Engineer by a method ensuring receipt within 24 hours. One copy shall include waivers of lien and similar attachments if required.
1. Transmit each copy with a transmittal form listing attachments and recording appropriate information about application.

G. Initial Application for Payment: Administrative actions and submittals that must precede or coincide with submittal of first Application for Payment include the following:
1. List of subcontractors.
2. Schedule of values.
3. Contractor's construction schedule (preliminary if not final).
4. Combined Contractor's construction schedule (preliminary if not final) incorporating Work of multiple contracts, with indication of acceptance of schedule by each Contractor.
5. Products list (preliminary if not final).
6. Schedule of unit prices, if applicable.
7. Submittal schedule (preliminary if not final).
8. List of Contractor's staff assignments.
9. List of Contractor's principal consultants.
10. Copies of building permits.
11. Copies of authorizations and licenses from authorities having jurisdiction for performance of the Work.
12. Initial progress report.
13. Report of preconstruction conference.
14. Certificates of insurance and insurance policies.
15. Performance and payment bonds.
16. Data needed to acquire Owner's insurance.

H. Application for Payment at Substantial Completion: After Engineer issues the Certificate of Substantial Completion, submit an Application for Payment showing 100 percent completion for portion of the Work claimed as substantially complete.
1. Include documentation supporting claim that the Work is substantially complete and a statement showing an accounting of changes to the Contract Sum.

2. This application shall reflect Certificate(s) of Substantial Completion issued previously for Owner occupancy of designated portions of the Work.

I. Final Payment Application: After completing Project closeout requirements, submit final Application for Payment with releases and supporting documentation not previously submitted and accepted, including, but not limited, to the following:
   1. Evidence of completion of Project closeout requirements.
   2. Insurance certificates for products and completed operations where required and proof that taxes, fees, and similar obligations were paid.
   3. Updated final statement, accounting for final changes to the Contract Sum.
   4. Evidence that claims have been settled.
   5. Final meter readings for utilities, a measured record of stored fuel, and similar data as of date of Substantial Completion or when Owner took possession of and assumed responsibility for corresponding elements of the Work.
   6. Final liquidated damages settlement statement.

PART 2 - PRODUCTS (Not Used)

PART 3 - EXECUTION (Not Used)

END OF SECTION

SECTION 01 31 00

PROJECT MANAGEMENT AND COORDINATION

PART 1 - GENERAL

1.01 SUMMARY

A. Section includes administrative provisions for coordinating construction operations on Project including, but not limited to, the following:
   1. General coordination procedures.
   2. Coordination drawings.
   3. Requests for Information (RFIs).
   4. Project meetings.
   5. Document Control and Security.

1.02 INFORMATIONAL SUBMITTALS

A. Subcontract List: Prepare a written summary identifying individuals or firms proposed for each portion of the Work, including those who are to furnish products or equipment fabricated to a special design. Include the following information in tabular form:
   1. Name, address, and telephone number of entities performing subcontract or supplying products.
   2. Number and title of related Specification Section(s) covered by subcontract.
   3. Drawing number and detail references, as appropriate, covered by subcontract.

B. Key Personnel Names: No later than preconstruction meeting, submit a list of key personnel assignments, including superintendent and other personnel in attendance at Project site. Identify individuals and their duties and responsibilities; list addresses and telephone numbers, including home, office, and cellular telephone numbers and e-mail addresses. Provide names, addresses, and telephone numbers of individuals assigned as alternates in the absence of individuals assigned to Project.
   1. Post copies of list in project meeting room, in temporary field office, and by each temporary telephone. Keep list current at all times.

1.03 GENERAL COORDINATION PROCEDURES

A. Coordination: Coordinate construction operations included in different Sections of the Specifications to ensure efficient and orderly installation of each part of the Work. Coordinate construction operations, included in different Sections, that depend on each other for proper installation, connection, and operation.
   1. Schedule construction operations in sequence required to obtain the best results where installation of one part of the Work depends on installation of other components, before or after its own installation.

2. Coordinate installation of different components to ensure maximum performance and accessibility for required maintenance, service, and repair.
3. Make adequate provisions to accommodate items scheduled for later installation.

B. Prepare memoranda for distribution to each party involved, outlining special procedures required for coordination. Include such items as required notices, reports, and list of attendees at meetings.
1. Prepare similar memoranda for Owner and separate contractors if coordination of their Work is required.

C. Administrative Procedures: Coordinate scheduling and timing of required administrative procedures with other construction activities to avoid conflicts and to ensure orderly progress of the Work. Such administrative activities include, but are not limited to, the following:
1. Preparation of Contractor's construction schedule.
2. Preparation of the schedule of values.
3. Installation and removal of temporary facilities and controls.
4. Delivery and processing of submittals.
5. Progress meetings.
6. Preinstallation conferences.
7. Project closeout activities.
8. Startup and adjustment of systems.

1.04 REQUESTS FOR INFORMATION (RFIs)

A. General: Immediately on discovery of the need for additional information or interpretation of the Contract Documents, contact the Engineer by telephone or meeting to determine if issues should be formalized by RFI. If RFI is determined to be necessary, Contractor shall prepare and submit an RFI in the form specified.
1. Engineer will return RFIs submitted to Engineer by other entities controlled by Contractor with no response.
2. Coordinate and submit RFIs in a prompt manner so as to avoid delays in Contractor's work or work of subcontractors.

B. Content of the RFI: Include a detailed, legible description of item needing information or interpretation and the following:
1. Project name.
2. Project number.
3. Date.
4. Name of Contractor.
5. Name of Engineer.
6. RFI number, numbered sequentially.
7. RFI subject.
8. Specification Section number and title and related paragraphs, as appropriate.
9. Drawing number and detail references, as appropriate.
10. Field dimensions and conditions, as appropriate.

11. Contractor's suggested resolution. If Contractor's suggested resolution impacts the Contract Time or the Contract Sum, Contractor shall state impact in the RFI.
12. Contractor's signature.
13. Attachments: Include sketches, descriptions, measurements, photos, Product Data, Shop Drawings, coordination drawings, and other information necessary to fully describe items needing interpretation.
    a. Include dimensions, thicknesses, structural grid references, and details of affected materials, assemblies, and attachments on attached sketches.

C. RFI Forms: Use form acceptable to Engineer.

D. Engineer's Action: Engineer will review each RFI, determine action required, and respond. Allow seven working days for Engineer's response for each RFI. RFIs received by Engineer after 1:00 p.m. will be considered as received the following working day.
1. The following Contractor-generated RFIs will be returned without action:
    a. Requests for approval of submittals.
    b. Requests for approval of substitutions.
    c. Requests for approval of Contractor's means and methods.
    d. Requests for coordination information already indicated in the Contract Documents.
    e. Requests for adjustments in the Contract Time or the Contract Sum.
    f. Requests for interpretation of Engineer's actions on submittals.
    g. Incomplete RFIs or inaccurately prepared RFIs.
2. Engineer's action may include a request for additional information, in which case Engineer's time for response will date from time of receipt of additional information.
3. Engineer's action on RFIs that may result in a change to the Contract Time or the Contract Sum may be eligible for Contractor to submit Change Proposal according to - Contract Modification Procedures.
    a. If Contractor believes the RFI response warrants change in the Contract Time or the Contract Sum, notify Engineer in writing within 10 days of receipt of the RFI response.

E. RFI Log: Prepare, maintain, and submit a tabular log of RFIs organized by the RFI number. Submit log weekly.
1. Project name.
2. Name and address of Contractor.
3. Name and address of Engineer.
4. RFI number including RFIs that were returned without action or withdrawn.
5. RFI description.
6. Date the RFI was submitted.
7. Date Engineer's response was received.

F. On receipt of Engineer's action, update the RFI log and immediately distribute the RFI response to affected parties. Review response and notify Engineer within seven days if Contractor disagrees with response.
1. Identification of related Minor Change in the Work, Construction Change Directive, and Proposal Request, as appropriate.

2. Identification of related Field Order, Work Change Directive, and Proposal Request, as appropriate.

1.05 PROJECT MEETINGS

A. General: Schedule and conduct meetings and conferences at Project site unless otherwise indicated.
   1. Attendees: Inform participants and others involved, and individuals whose presence is required, of date and time of each meeting. Notify Owner and Engineer of scheduled meeting dates and times.
   2. Agenda: Prepare the meeting agenda. Distribute the agenda to all invited attendees.
   3. Minutes: Entity responsible for conducting meeting will record significant discussions and agreements achieved. Distribute the meeting minutes to everyone concerned, including Owner and Engineer, within three days of the meeting.

B. Preconstruction Conference: Schedule and conduct a preconstruction conference before starting construction, at a time convenient to Owner and Engineer, but no later than 15 days after execution of the Agreement.
   1. Conduct the conference to review responsibilities and personnel assignments.
   2. Attendees: Authorized representatives of Owner, Engineer, and their consultants; Contractor and its superintendent; major subcontractors; suppliers; and other concerned parties shall attend the conference. Participants at the conference shall be familiar with Project and authorized to conclude matters relating to the Work.
   3. Agenda: Discuss items of significance that could affect progress, including the following:
      a. Tentative construction schedule.
      b. Critical work sequencing and long-lead items.
      c. Designation of key personnel and their duties.
      d. Lines of communications.
      e. Procedures for processing field decisions and Change Orders.
      f. Procedures for RFIs.
      g. Procedures for testing and inspecting.
      h. Procedures for processing Applications for Payment.
      i. Distribution of the Contract Documents.
      j. Submittal procedures.
      k. Preparation of record documents.
      l. Use of the premises.
      m. Work restrictions.
      n. Working hours.
      o. Owner's occupancy requirements.
      p. Responsibility for temporary facilities and controls.
      q. Procedures for moisture and mold control.
      r. Procedures for disruptions and shutdowns.
      s. Construction waste management and recycling.
      t. Parking availability.
      u. Office, work, and storage areas.
      v. Equipment deliveries and priorities.

w. First aid.
x. Security.
y. Progress cleaning.

4. Minutes: Entity responsible for conducting meeting will record and distribute meeting minutes.

C. Preinstallation Conferences: Conduct a preinstallation conference at Project site before each construction activity that requires coordination with other construction.
1. Attendees: Installer and representatives of manufacturers and fabricators involved in or affected by the installation and its coordination or integration with other materials and installations that have preceded or will follow, shall attend the meeting. Advise Engineer of scheduled meeting dates.
2. Agenda: Review progress of other construction activities and preparations for the particular activity under consideration, including requirements for the following:
a. Contract Documents.
b. Options.
c. Related RFIs.
d. Related Change Orders.
e. Purchases.
f. Deliveries.
g. Submittals.
h. Review of mockups.
i. Possible conflicts.
j. Compatibility requirements.
k. Time schedules.
l. Weather limitations.
m. Manufacturer's written instructions.
n. Warranty requirements.
o. Compatibility of materials.
p. Acceptability of substrates.
q. Temporary facilities and controls.
r. Space and access limitations.
s. Regulations of authorities having jurisdiction.
t. Testing and inspecting requirements.
u. Installation procedures.
v. Coordination with other work.
w. Required performance results.
x. Protection of adjacent work.
y. Protection of construction and personnel.
3. Record significant conference discussions, agreements, and disagreements, including required corrective measures and actions.
4. Reporting: Distribute minutes of the meeting to each party present and to other parties requiring information.
5. Do not proceed with installation if the conference cannot be successfully concluded. Initiate whatever actions are necessary to resolve impediments to performance of the Work and reconvene the conference at earliest feasible date.

D. Project Closeout Conference: Schedule and conduct a project closeout conference, at a time convenient to Owner and Engineer, but no later than 90 days prior to the scheduled date of Substantial Completion.
   1. Conduct the conference to review requirements and responsibilities related to Project closeout.
   2. Attendees: Authorized representatives of Owner, Engineer, and their consultants; Contractor and its superintendent; major subcontractors; suppliers; and other concerned parties shall attend the meeting. Participants at the meeting shall be familiar with Project and authorized to conclude matters relating to the Work.
   3. Agenda: Discuss items of significance that could affect or delay Project closeout, including the following:
      a. Preparation of record documents.
      b. Procedures required prior to inspection for Substantial Completion and for final inspection for acceptance.
      c. Submittal of written warranties.
      d. Requirements for preparing operations and maintenance data.
      e. Requirements for delivery of material samples, attic stock, and spare parts.
      f. Requirements for demonstration and training.
      g. Preparation of Contractor's punch list.
      h. Procedures for processing Applications for Payment at Substantial Completion and for final payment.
      i. Submittal procedures.
      j. Coordination of separate contracts.
      k. Owner's partial occupancy requirements.
      l. Installation of Owner's furniture, fixtures, and equipment.
      m. Responsibility for removing temporary facilities and controls.
   4. Minutes: Entity conducting meeting will record and distribute meeting minutes.

E. Progress Meetings: Conduct progress meetings at weekly intervals.
   1. Coordinate dates of meetings with preparation of payment requests.
   2. Attendees: In addition to representatives of Owner and Engineer, each contractor, subcontractor, supplier, and other entity concerned with current progress or involved in planning, coordination, or performance of future activities shall be represented at these meetings. All participants at the meeting shall be familiar with Project and authorized to conclude matters relating to the Work.
   3. Agenda: Review and correct or approve minutes of previous progress meeting. Review other items of significance that could affect progress. Include topics for discussion as appropriate to status of Project.
      a. Contractor's Construction Schedule: Review progress since the last meeting. Determine whether each activity is on time, ahead of schedule, or behind schedule, in relation to Contractor's construction schedule. Determine how construction behind schedule will be expedited; secure commitments from parties involved to do so. Discuss whether schedule revisions are required to ensure that current and subsequent activities will be completed within the Contract Time.
         1) Review schedule for next period.
      b. Review present and future needs of each entity present, including the following:
         1) Interface requirements.

2) Sequence of operations.
3) Status of submittals.
4) Deliveries.
5) Off-site fabrication.
6) Access.
7) Site utilization.
8) Temporary facilities and controls.
9) Progress cleaning.
10) Quality and work standards.
11) Status of correction of deficient items.
12) Field observations.
13) Status of RFIs.
14) Status of proposal requests.
15) Pending changes.
16) Status of Change Orders.
17) Pending claims and disputes.
18) Documentation of information for payment requests.

4. Minutes: Entity responsible for conducting the meeting will record and distribute the meeting minutes to each party present and to parties requiring information.

   a. Schedule Updating: Revise Contractor's construction schedule after each progress meeting where revisions to the schedule have been made or recognized. Issue revised schedule concurrently with the report of each meeting.

F. Document Control and Security:

1. Documentation shall be maintained in a secure and controlled manner. Upon receipt of revised Construction Documents, the contractor shall have in place appropriate means of controlling the documents to assure the latest versions are being utilized for construction. Further, superseded documentation shall be disposed of in a controlled manner to avoid compromising the information.

PART 2 - PRODUCTS (Not Used)

PART 3 - EXECUTION (Not Used)

END OF SECTION

SECTION 01 32 00

CONSTRUCTION PROGRESS DOCUMENTATION

PART 1 - GENERAL

1.01 SUMMARY

A. Section includes administrative and procedural requirements for documenting the progress of construction during performance of the Work, including the following:

1. Startup construction schedule.
2. Contractor’s construction schedule.
3. Construction schedule updating report.
4. Special report.

1.02 QUALITY ASSURANCE

A. Scheduling Consultant Qualifications: An experienced specialist in CPM scheduling and reporting, with capability of producing CPM reports and diagrams within 24 hours of Architect's request.

1.03 COORDINATION

A. Coordinate preparation and processing of schedules and reports with performance of construction activities and with scheduling and reporting of separate contractors.

B. Coordinate Contractor's construction schedule with the schedule of values, list of subcontracts, submittal schedule, progress reports, payment requests, and other required schedules and reports.

PART 2 - PRODUCTS

2.01 CONTRACTOR'S CONSTRUCTION SCHEDULE (CPM SCHEDULE)

A. General: Prepare network diagrams using AON (activity-on-node) format.

B. CPM Schedule: Prepare Contractor's construction schedule using a time-scaled CPM network analysis diagram for the Work.

1. Develop network diagram in sufficient time to submit CPM schedule so it can be accepted for use no later than 15 days after date established for the Notice to Proceed.

    a. Failure to include any work item required for performance of this Contract shall not excuse Contractor from completing all work within applicable completion dates, regardless of Architect's approval of the schedule.

C. CPM Schedule Preparation: Prepare a list of all activities required to complete the Work. Using the startup network diagram, prepare a skeleton network to identify probable critical paths. Schedule shall incorporate Owner's construction sequencing plan requirements.

1. Activities: Indicate the estimated time duration, sequence requirements, and relationship of each activity in relation to other activities. Include estimated time frames for the following activities:

    a. Preparation and processing of submittals.
    b. Mobilization and demobilization.
    c. Purchase of materials.
    d. Delivery.
    e. Fabrication.
    f. Utility interruptions.
    g. Installation.
    h. Work by Owner that may affect or be affected by Contractor's activities.
    i. Punch list and final completion.
    j. Activities occurring following final completion.

2. Critical Path Activities: Identify critical path activities, including those for interim completion dates. Scheduled start and completion dates shall be consistent with Contract milestone dates.
3. Processing: Process data to produce output data on a computer-drawn, time-scaled network. Revise data, reorganize activity sequences, and reproduce as often as necessary to produce the CPM schedule within the limitations of the Contract Time.
4. Format: Mark the critical path. Locate the critical path near center of network; locate paths with most float near the edges.

D. Contract Modifications: For each proposed contract modification and concurrent with its submission, prepare a time-impact analysis using a network fragment to demonstrate the effect of the proposed change on the overall project schedule.

2.02 SPECIAL REPORTS

A. General: Submit special reports directly to Owner within one day of an occurrence. Distribute copies of report to parties affected by the occurrence.

B. Reporting Unusual Events: When an event of an unusual and significant nature occurs at Project site, whether or not related directly to the Work, prepare and submit a special report. List chain of events, persons participating, response by Contractor's personnel,

evaluation of results or effects, and similar pertinent information. Advise Owner in advance when these events are known or predictable.

PART 3 - EXECUTION

3.01 CONTRACTOR'S CONSTRUCTION SCHEDULE

A. Contractor's Construction Schedule Updating: At weekly construction meetings, provide updated schedule to reflect actual construction progress and activities.

1. Revise schedule immediately after each meeting or other activity where revisions have been recognized or made. Issue updated schedule concurrently with the report of each such meeting.
2. Include a report with updated schedule that indicates every change, including, but not limited to, changes in logic, durations, actual starts and finishes, and activity durations.
3. As the Work progresses, indicate final completion percentage for each activity.

B. Distribution: Distribute copies of approved schedule to Architect Owner, separate contractors, testing and inspecting agencies, and other parties identified by Contractor with a need-to-know schedule responsibility.

1. Post copies in Project meeting rooms and temporary field offices.
2. When revisions are made, distribute updated schedules to the same parties and post in the same locations. Delete parties from distribution when they have completed their assigned portion of the Work and are no longer involved in performance of construction activities.

END OF SECTION

SECTION 01 32 33

PHOTOGRAPHIC DOCUMENTATION

1.01 RELATED DOCUMENTS

A. Drawings and general provisions of the Contract, including General Conditions and other Division 01 Specification Sections, apply to this Section.

1.02 SUMMARY

A. Section includes administrative and procedural requirements for the following:

1. Preconstruction photographs.
2. Periodic construction photographs.
3. Final completion construction photographs.
4. Preconstruction video recordings.

B. Related Requirements:

1. Section 013300 "Submittal" for submitting photographic documentation.
2. Section 017700 "Closeout Procedures" for submitting photographic documentation as project record documents at Project closeout.

1.03 ALLOWANCES

A. No allowance for photographic documentation.

1.04 UNIT PRICES

Not Used

1.05 INFORMATIONAL SUBMITTALS

A. Key Plan: Submit key plan of Project site and building with notation of vantage points marked for location and direction of each photograph. Indicate elevation or story of construction. Include same information as corresponding photographic documentation.

B. Digital Photographs: Submit image files monthly at progress meetings.

1. Digital Camera: Minimum sensor resolution of 4 megapixels.
2. Format: Minimum 1600 by 1200 pixels, in unaltered original files, with same aspect ratio as the sensor, uncropped, date and time stamped, in folder named by date of photograph, accompanied by key plan file.

3. Identification: Provide the following information with each image description in file metadata tag:

    a. Name of Project.

    b. Name and contact information for photographer.

    c. Name of Engineer.

    d. Name of Contractor.

    e. Date photograph was taken.

    f. Description of vantage point, indicating location, direction (by compass point), and elevation or story of construction.

    g. Unique sequential identifier keyed to accompanying key plan.

C. Video Recordings: Submit video recordings within seven days of recording.

1. Submit video recordings in digital video disc format acceptable to Engineer.

2. Identification: With each submittal, provide the following information:

    a. Name of Project.

    b. Name and address of photographer.

    c. Name of Engineer.

    d. Name of Contractor.

    e. Date video recording was recorded.

    f. Description of vantage point, indicating location, direction (by compass point), and elevation or story of construction.

    g. Weather conditions at time of recording.

D. Transcript: Prepared on 8-1/2-by-11-inch (215-by-280-mm) paper, punched and bound in heavy-duty, three-ring, vinyl-covered binders. Mark appropriate identification on front and spine of each binder. Include a cover sheet with same label information as corresponding video recording. Include name of Project and date of video recording on each page.

1.06 USAGE RIGHTS

A. Obtain and transfer copyright usage rights from photographer to The Service for unlimited reproduction of photographic documentation.

PART 2 - PRODUCTS

(Not Used)

PART 3 - EXECUTION

(Not Used)

3.01 CONSTRUCTION PHOTOGRAPHS

A. General: Take photographs using the maximum range of depth of field, and that are in focus, to clearly show the Work. Photographs with blurry or out-of-focus areas will not be accepted.

1. Maintain key plan with each set of construction photographs that identifies each photographic location.

B. Digital Images: Submit digital images exactly as originally recorded in the digital camera, without alteration, manipulation, editing, or modifications using image-editing software.

1. Date and Time: Include date and time in file name for each image.

2. Field Office Images: Maintain one set of images accessible in the field office at Project site, available at all times for reference. Identify images in the same manner as those submitted to Engineer.

C. Preconstruction Photographs: Before commencement of excavation, take photographs of Project site and surrounding properties, including existing items to remain during construction, from different vantage points, as directed by Engineer.

1. Flag construction limits before taking construction photographs.

2. Take 20 photographs to show existing conditions adjacent to property before starting the Work.

3. Take 20 photographs of existing buildings either on or adjoining property to accurately record physical conditions at start of construction.

4. Take additional photographs as required to record settlement or cracking of adjacent structures, pavements, and improvements.

D. Periodic Construction Photographs: Take 20 photographs as requested with the cutoff date associated with each Application for Payment. Select vantage points to show status of construction and progress since last photographs were taken.

E. Construction Manager-Directed Construction Photographs: Not Used.

F. Time-Lapse Sequence Construction Photographs: Not Used.

G. Final Completion Construction Photographs: Take 20 color photographs after date of Substantial Completion for submission as project record documents. Construction Manager will inform photographer of desired vantage points.

1. Do not include date stamp.

3.02 CONSTRUCTION VIDEO RECORDINGS

A. Recording: Mount camera on tripod before starting recording unless otherwise necessary to show area of construction. Display continuous running time and date. At start of each video recording, record weather conditions from local newspaper or television and the actual temperature reading at Project site.

B. Narration: Describe scenes on video recording by dubbing audio narration off-site after video recording is recorded. Include description of items being viewed, recent events, and planned activities. At each change in location, describe vantage point, location, direction (by compass point), and elevation or story of construction.

1. Confirm date and time at beginning and end of recording.

2. Begin each video recording with name of Project, Contractor's name, videographer's name, and Project location.

C. Preconstruction Video Recording: Before starting excavation, record video recording of Project site and surrounding properties from different vantage points, as directed by Construction Manager.

1. Flag construction limits before recording construction video recordings.

2. Show existing conditions adjacent to Project site before starting the Work.

3. Show existing buildings either on or adjoining Project site to accurately record physical conditions at the start of excavation.

4. Show protection efforts by Contractor.

D. Periodic Construction Video Recordings: Not used.

E. Time-Lapse Sequence Construction Video Recordings: Not used

END OF SECTION

SECTION 01 33 00

SUBMITTALS

PART 1 - GENERAL

1.01 DESCRIPTION

A. This Section specifies the general methods and requirements of submissions applicable to the following work-related submittals:

1. Shop Drawings
2. Product Data
3. Samples
4. CD of Construction Photographs
5. Construction and Submittal Schedules
6. Operation and Maintenance Manuals
7. Manufacturer's Instructions and Certificates
8. As-built Drawings
9. Asset Management Tables
10. Monthly Progress Reports

B. Detailed submittal requirements are specified in the individual specification sections.

1.02 SHOP DRAWINGS, PRODUCT DATA, SAMPLES

A. Shop Drawings

1. Shop drawings, as defined in the General Conditions, and as specified in individual work sections include, but are not necessarily limited to: custom-prepared data such as fabrication and erection/installation (working) drawings of concrete reinforcement, structural details and piping layout, schedule information, setting diagrams, actual shop-work manufacturing instructions, custom templates, special wiring diagrams, coordination drawings, dimensions, graphs, design calculations, catalog sheets, data sheets, individual system or equipment inspection and test reports, including performance curves and certifications as applicable to the work.

2. All shop and working drawings shall be prepared on standard minimum size, 8.5-in. by 11-in. sheets or maximum 24-in. by 34-in.

3. All shop drawings shall be submitted using the transmittal form furnished by the Engineer.

4. All shop drawings submitted by subcontractors for approval shall be sent directly to the Contractor for checking. The Contractor shall be responsible for their submission at the proper time so as to prevent delays in delivery of materials.

5. The Contractor shall check all subcontractors' shop drawings to verify measurements, size of products, materials, and details and ensure that they conform with the Drawings and Specifications. Shop drawings found to be incomplete or otherwise in error shall be returned to the subcontractors for correction prior to submission for approval.

6. All structural details on shop drawings submitted for approval shall show clearly the relation of the various parts of the main members, the lines of the structure, and where correct fabrication of the work depends upon field measurements; such measurements shall be made and noted on the drawings before the drawings are submitted for approval.

B. Product Data

1. Product data, as specified in individual Sections, include, but are not necessarily limited to, standard prepared data for manufactured products (sometimes referred to as catalog data), such as the manufacturer's product specification and installation instructions, availability of colors and patterns, manufacturer's printed statements of compliance and applicability, roughing-in diagrams and templates, catalog cuts, product photographs, standard wiring diagrams, printed performance curves and operational-range diagrams, production or quality control inspection and test reports, certifications, recommended spare-parts lists, and printed product warranties, as applicable to the Work.

2. Clearly mark which model is proposed with capacities, dimensions, clearances, diagrams, controls, connections, anchorage, and supports

C. Samples

1. Samples specified in individual Sections, include, but are not necessarily limited to, physical examples of the Work such as sections of manufactured or fabricated work, small cuts or containers of materials, complete units of repetitively-used products, color/texture/pattern swatches and range sets, specimens for coordination of visual effect, graphic symbols, and units of work to be used by the Engineer or Owner for independent inspection and testing, as applicable to the Work.

D. Construction Schedule

1. Submit the following items for review at the pre-construction conference, but in no case later than 14 days following the Stage 1 Notice to Proceed:

(a) Project Schedule – comply with contract documents.
(b) Submittal Schedule
(c) Schedule of Value

1.03 CONTRACTOR'S RESPONSIBILITIES

A. The Contractor shall review shop drawings, product data and samples, including those by subcontractors, prior to submission to determine and verify the following:

1. Field measurements

2. Field construction criteria

3. Catalog numbers and similar data

4. Conformance with the Specifications

B. Each shop drawing, sample, and product data submitted by the Contractor shall have the following Certification Statement (include the Contractor's Company name and the authorized signature of the Contractor) affixed to it: "Certification Statement: by this submittal, I hereby represent that I have determined and verified all field measurements, field construction criteria, materials, dimensions, catalog numbers and similar data, and I have checked and coordinated each item with other applicable approved shop drawings and all Contract requirements." Shop drawings and product data sheets 11-in. X 17-in. and smaller shall be bound together in an orderly fashion and bear the above Certification Statement on the cover sheet. The cover sheet shall fully describe the packaged data and include a listing of all items within the package. Provide to the Engineer a copy of each submittal transmittal form for shop drawings, product data and samples; forwarded to the Engineer at the time of submittal of said drawings, product data and samples.

C. If a shop drawing shows any deviation from the requirements of the Contract Documents, the Contractor shall make specific mention of the deviations in the transmittal form and provide a description of the deviations in a letter attached to the submittal.

D. The review and approval of shop drawings, samples or product data by the Engineer shall not relieve the Contractor from his responsibility with regard to the fulfillment of the terms of the Contract.

E. No portion of the Work requiring a shop drawing, sample, or product data shall be started and no materials shall be fabricated or installed prior to the approval or qualified approval of such item. Fabrication performed, materials purchased, or on-site construction accomplished which does not conform to approved shop drawings and data shall be at the Contractor's risk. The

Owner will not be liable for any expense or delay due to corrections or remedies required to accomplish conformity. Such corrections or remedies shall be completed by the Contractor at his own expense.

F. Project work, materials, fabrication, and installation shall conform to approved shop drawings, applicable samples, and product data.

1.04 SUBMISSION REQUIREMENTS

A. The Contractor shall make submittals promptly in accordance with approved schedule, and in such sequence as to cause no delay in the Work or in the work of any other contractor. Failure to make timely submittals in accordance with approved schedule shall constitute grounds for the Owner to withhold compensation for the equipment to which the submittal is related, or in the case of information lists, record drawings, investigation findings, safety plans, quality plans, and similar items, the Owner may withhold the value of the information in the submittal.

B. The Engineer review period shall be no longer than twenty-one (21) calendar days from the date of receipt. The submittal will be returned to the Contractor with the appropriate notations. Instruction books and reference data submittals will be reviewed by Engineer for general content but not for substance.

C. Initial submittals returned to the Contractor without review, for correction and resubmittal, shall be completed within ten (10) working days after receipt or notification from Engineer, whichever occurs first. Resubmittal reviews by the Engineer shall be no longer than fourteen (14) calendar days. A maximum of two resubmittals will be allowed. Costs for third and subsequent reviews of required submittal items shall be paid by the contractor and shall be withheld from the monthly progress payments to contractor.

D. Number of submittals required:

1. Shop Drawings: Unless otherwise stated in the respective Specifications Sections, submit five (5) paper copies or one electronic copy.

2. Product Data: Unless otherwise stated in the respective Specifications submit five (5) paper copies or one electronic copy in an unsecured PDF format

3. Samples: Submit no less than three (3) samples of each item.

4. Photographs: Submit one (1) CD.

5. O&M Manuals: Unless otherwise stated in the respective Specifications submit two (2) paper copies and one (1) electronic copy.

6. As-Builts (Red-lined drawings): Submit one (1) paper copy.

E. Submittals shall contain:

1. The date of submission and the dates of any previous submissions.
2. The Project title and number.
3. Date work order issued to Contractor
4. Scheduled start date for work order construction
5. Percent (%) completed
6. Contractor identification.
7. The names of:
    a. Contractor
    b. Supplier
    c. Manufacturer
8. Identification of the product, with the specification section number, page and paragraph(s).
9. Field dimensions clearly identified as such.
10. Relation to adjacent or critical features of the Work or materials.
11. Applicable standards, such as ASTM or Federal Specification numbers.
12. Identification of deviations from Contract Documents.
13. Identification of revisions on resubmittals.

F. Electronic Submittals:

1. Each submittal shall be an unsecured electronic file in Adobe Acrobat Portable Document Format (PDF). Use the latest version available at time of execution of the Contract.
2. Electronic files that contain more than 10 pages in PDF format shall contain internal book marking from an index page to major sections of the document.
3. PDF files shall be set to open “Bookmarks and Page” view.
4. Add general information to each PDF file, including title, subject, author, and keywords.

G. Each shipment of drawings shall be accompanied by a transmittal form (the Engineer shall provide a standard transmittal form for the Contractor's use) which includes a list of the drawing numbers and the names outlined in E.7 above.

H. Whenever the Contractor is required to submit design calculations as part of a submittal, such calculations shall bear the signature and seal of an engineer registered in the appropriate branch and in the state of New Mexico, unless otherwise indicated.

I. Format

1. Minimum sheet size shall be 8-1/2 inches by 11 inches, and maximum sheet size shall be 24 inches by 36 inches.

2. Collate and staple or bind, as appropriate, each copy of a submittal; neither the Owner's Representative nor the Designer will collate sheets or copies.

3. Where product data from a manufacturer is submitted, clearly mark which model is proposed, with complete pertinent data capacities, dimensions, clearances, diagrams, controls, connections, anchorage, and supports.

4. Present a sufficient level of detail for assessment of compliance with the Contract Documents.

5. Numbering

(a) Each submittal shall be assigned a unique number. Submittals shall be numbered sequentially. The submittal numbers shall be clearly noted on the transmittal. Original submittals shall be assigned a numeric Submittal number. Resubmittals shall bear a numeric system with "R" which consists of the number assigned to the original submittal for that item followed by a letter of the alphabet to represent that it is a subsequent submittal of the original. For example, if Submittal 25 requires a resubmittal, the first resubmittal will bear the designation "25-R1" and the second resubmittal shall bear the designation "25-R2" and so on.

6. Disorganized submittals which do not meet the requirements above will be returned without review.

1.05 REVIEW OF SUBMITTALS

A. The Engineer's review is for general conformance with the design concept and contract drawings. Markings or comments shall not be construed as relieving the Contractor from compliance with the contract plans and specifications or from departures therefrom. The Contractor remains responsible for details and accuracy, for coordinating the work with all other

associated work and trades, for selecting fabrication processes, for techniques of assembly, and for performing work in a safe manner.

B. An electronic copy of shop drawings or product data will be returned to the Contractor if it is submitted electronically. Samples will not be returned.

C. Submittals will be returned to the Contractor under one of the action codes indicated below.

1. "NO EXCEPTIONS TAKEN"
   (a) Formal revision and resubmission of submittal will not be required.

2. "MAKE CORRECTIONS NOTED"
   (a) Formal revision and resubmission of submittal will not be required.

3. "NOTE MARKINGS-RESUBMIT"
   (a) The Contractor shall revise submittal and resubmit. Resubmittal of portions of multi-page or multi-drawing submittals will not be allowed.

4. "REJECTED-RESUBMIT"
   (a) The Contractor shall revise submittal and resubmit. Resubmittal of portions of multi-page or multi-drawing submittals will not be allowed.

D. Resubmittals will be handled in the same manner as first submittals. On resubmittals the Contractor shall direct specific attention, in writing, on the letter of transmittal and on resubmitted shop drawings by use of revision triangles or other similar methods, to revisions other than the corrections requested by the Engineer on previous submissions. Any such revisions which are not clearly identified shall be made at the risk of the Contractor. The Contractor shall make corrections to any work done because of this type of revision.

E. Partial submittals may not be reviewed. The Engineer will be the only judge as to the completeness of a submittal. Submittals not complete will be returned to the Contractor and will be considered "Rejected" until resubmitted. The Engineer may its discretion provide a list or mark the submittal directing the Contractor to the areas that are incomplete.

F. If the Contractor considers any correction indicated on the shop drawings to constitute a change to the Contract Documents, the Contractor shall give written notice thereof to the Engineer at least ten (10) working days prior to release for manufacture.

G. When the shop drawings have been completed to the satisfaction of the Engineer, the Contractor shall carry out the construction in accordance therewith and shall make no further changes therein except upon written instructions from the Engineer.

1.06 EXCESSIVE SUBMITTALS

A. The Contractor shall reimburse the Owner for Engineer's costs to review Excessive Submittals.

B. The Contractor is allowed two (2) submittals on any one (1) item of material, product, equipment system, or O&M Manual to demonstrate compliance with the requirement of the Contract Documents.

C. Any and all subsequent submittals for the item of material, product, equipment system, or O&M Manual following the first two (2) submittals that Contractor still needs to make to demonstrate compliance with the requirements of the Contract Documents are defined as Excessive Submittals.

D. Owner will charge Contractor for all of Engineer's labor and incidental costs to review Excessive Submittals based on Engineer's standard billing rates. The total amount owed by Contractor to Owner for review of Excessive submittals will be deducted from the amounts owed Contractor on the Final Adjusting Change Order.

E. In accordance with the sections above, whenever the Engineer, if applicable, marks the first re-submittal (i.e. the second submittal) on a particular item with the Action Code: "C-Reviewed and Not Accepted. Correct and Resubmit", this will constitute written notice by the Owner to the Contractor and that Excessive Submittals for the item in question will be required of the Contractor and that the Owner will deduct Engineer's labor and incidental costs to review any and all subsequent submittals on the item in question from the Contract Price on the final Adjusting Change Order for the project.

1.07 AS-BUILT DRAWINGS

A. Project Site Drawings Set

1. Contractor shall maintain one set of all Specifications, Drawings, Addenda, Modifications, and Shop Drawings on site and in good order for making as-built information. This set shall be annotated/updated at least once a week and will be reviewed for verification of updates by the construction observer on a regular basis, depending on the length of the contract. Submit marked-up set to Engineer for review at least five (5) working days prior to inspection for Certification of Substantial Completion.

2. On this set, mark every project condition, location, configuration, and any other change or deviation which may differ from the Contract Drawings at the time of award, including buried or concealed construction and utility features that are revealed during the course of construction.

3. Give special attention and record the horizontal and vertical location of buried utilities that differ from the locations indicated, or that were not indicated on the Contract Drawings.

4. The standard horizontal datum and standard projection shall match those referenced in the construction drawings. If no horizontal datum or projection is referenced, the horizontal datum shall be North American Datum 1983 (NAD 83) and the projection shall be New Mexico State Plane Coordinate System (NMSPCS 83). The standard vertical datum shall match the vertical datum referenced in the construction drawings. If no vertical datum is referenced, the vertical datum shall be North American Vertical Datum 1988 (NAVD 88). The control marks shall match those referenced in the construction drawings. If no control mark is referenced, the location information shall be tied to a legal control mark. A copy of the construction drawings base file is available for reference upon request to the Engineer.

5. Supplement the as-built drawings by any detailed sketches as necessary or as directed, in order to fully indicate the Work as actually constructed.

6. The as-built drawings are the Contractor's representation of as-built conditions, shall include revisions made by addenda and change orders, and shall be maintained up-to-date during the progress of the Work.

7. Use red ink for alterations and notes.

8. Notes shall identify relevant Change Orders and RFIs by number and date.

B. Record Specifications

1. Mark Specifications to indicate the actual product installation where installation varies from that indicated in Specifications, addenda, and contract modifications.

   (a) Give particular attention to information on concealed products and installations that cannot be readily identified and recorded later.

   (b) Mark As-Built set with the proprietary name and model number of products, materials, and equipment furnished, including substitutions and product options selected.

   (c) Record the name of the manufacturer, supplier, installer, and other information necessary to provide a record of selections made.

   (d) Note related Change Orders, field order notes, Request for Information (RFI) notes, Record Product Data, and Record Drawings where applicable.

C. RECORD PRODUCT DATA

1. Mark Product Data to indicate the actual product installation where installation varies substantially from that indicated in Product Data Submittal.

(a) Give particular attention to information on concealed products and installations that cannot be readily identified and recorded later.

(b) Include significant changes in the product delivered to Project site and changes in manufacturer's written instructions for installation.

(c) Note related Change Orders, Record Specifications, and Record Drawings where applicable.

D. Submittal

1. Comply with Contract Documents and submit one copy of red-lined As-Built drawings to the Owner's representative with each Application for Payment and at the end of the project prior to final payment. Submittals shall include:

(a) One (1) hard copy set of As-Built documents including all Specifications, Full Size Drawings, Addenda, Modifications, and Shop Drawings. The set shall clearly mark any deviations from the construction drawings.

(b) One (1) digital point file of final as-built survey. Point file shall be comma delineated PNEZD text format (*.txt). Point descriptions shall clearly describe the point.

(c) The full-size hard copy of the as-built plans shall cross-reference the final as-built survey. Each point from the final as-built survey shall be marked with the point number on the full-size hard copy of the as-built plans pointing to the item surveyed.

2. Final As-Built Survey for Record Drawings submitted shall include the following information:

(a) Project Owner and Project Number

(b) Name, address, and phone number of responsible land surveyor.

(c) Date of completion of Survey

(d) Equipment used to conduct the Survey

(e) Horizontal and vertical control marks used to tie the survey to the vertical and horizontal datums referenced above. Ground to grid combination scale factor used.

E. In the case of those drawings that depict the detail requirement for equipment to be assembled and wired in the factory, such as motor control centers and the like, update the as-built drawings by indicating those portions which are superseded by Change Order drawings or final Shop Drawings, and by including appropriate reference information describing the Change Orders by number and the Shop Drawings by manufacturer, drawing, and revision numbers.

F. Unacceptable Drawings

1. Disorganized or incomplete as-built drawings will not be accepted.
2. The Contractor shall revise them and resubmit within 10 Days.

G. As-built drawings shall be accessible to the Owner's Representative and/or Engineer during the construction period.

H. Payment for as-built drawings is incidental to the project. No separate payment shall be made.

1.08 MANUFACTURER'S INSTRUCTIONS

A. When specified in individual specification Sections, submit manufacturer's printed instructions for delivery, storage, assembly, installation, start-up, adjusting, and finishing, in quantities specified for Product Data.

B. When specified in individual specification Sections, submit manufacturer's certificate to Engineer for review, in quantities specified for Product Data.

C. Indicate if materials or Products conform to or exceed specified requirements. Submit supporting reference data, affidavits, and certifications as appropriate.

D. Certificates may be recent or previous test results on material or product but must be acceptable to Engineer.

1.09 DISTRIBUTION

A. Distribute reproductions of approved shop drawings and copies of approved product data and samples, where required, to the job site file and elsewhere as directed by the Engineer. Number of copies shall be as directed by the Engineer.

1.10 GENERAL PROCEDURES FOR SUBMITTALS

A. Coordination of Submittal Times: Prepare and transmit each submittal sufficiently in advance of performing the related work or other applicable activities, or within the time specified in the individual work sections of the Specifications, so that the installation will not be delayed by processing times (including disapproval resubmittal, if required, coordination with other submittals, testing, purchasing, fabrication, delivery and similar sequenced activities). No extension of time will be authorized because of the Contractor's failure to transmit submittals sufficiently in advance of the Work. Owner shall make the sole determination as to whether submittal was submitted in a timely manner.

PART 2 - PRODUCTS

Not Used.

PART 3 - EXECUTION

Not Used.

END OF SECTION

SECTION 01 33 10

SCHEDULES AND REPORTS

PART 1 - GENERAL

1.01 GENERAL REQUIREMENTS

A. This Section supplements the MES General Conditions.

B. The work under this Contract shall be planned, scheduled, executed, reported and accomplished using a Gantt Chart method (herein after referred to as GC), in calendar days, unless otherwise specifically provided in the Contract Documents.

C. The primary objectives of the GC scheduling requirements are: (1) to insure adequate planning and execution of the Work by Contract; (2) to assist the County and Engineer in evaluating progress of the Work; (3) to provide for optimum coordination by Contractor of his trades, Subcontractors and Suppliers; (4) to permit the timely prediction or detection of events or occurrences which may affect the timely prosecution of the Work; and (5) to provide a mechanism or tool for use by the County, Engineer, and Contractor which may be required for the completion of the various portions of the Work by the date specified in the Contract Documents.

D. Contractor is responsible for determining the sequence of activities, the time estimates of the detailed construction activities and the means, methods, techniques and procedures to be employed. The GC Progress Schedule shall represent the Contractor's best judgment of how he will prosecute the Work in compliance with the Contract requirements. Contractor shall ensure that the GC Progress Schedule is current and accurate and is properly and timely monitored, updated and revised as Project conditions and the Contract Documents may require.

E. The Contractor acknowledges and agrees that his GC Progress Schedule must be flexible in order to accommodate and allow for his coordination with the operations of the County and the Work of separate contractors relating to the Project. Contractor agrees to hold meetings with the County and separate contractors to resolve any conflicts between Contractor's GC Progress Schedule and the operations of the County or work of separate contractors. Contractor agrees to fully cooperate with the County and separate contractors to resolve such conflicts and to revise his GC Progress Schedule as reasonably required.

F. In order to maintain the orderly progress of the work performed on the Project, the Engineer and the County shall have the right to determine the priority between the Work performed by Contractor and the work of any separate contractors or County's operations; this decision shall be final and binding upon Contractor and shall not be a cause for extra compensation or an extension of time, except where an extension of time is granted because of a delay for which Contractor is otherwise entitled to an extension under the Contract Documents. Provided, however, that this right shall not be exercised by the Engineer unless: (1) the determination is necessary, because of Project

conditions; and (2) Contractor and any separate contractors cannot otherwise agree upon such priority of schedule and shall not be construed as relieving the Contractor of his obligation to cooperate with any separate contractors on the Project.

G. Approval or acceptance by the County or Engineer of the Contractor's GC Progress Schedule, or any revisions or updates thereto, is advisory only and shall not relieve the Contractor of the responsibility for accomplishing each portion of the Work within each and every applicable date. Omissions and errors in the approved or accepted GC Progress Schedule, or any revisions or updates shall not excuse performance, which is not in compliance with the Contract. Approval by the County or Engineer in no way makes the County an insurer of the reliability, accuracy or feasibility of the GC Progress Schedule nor liable for time or cost overruns flowing from such omissions or errors. It is understood and agreed that the Contractor cannot rely upon any informal or constructive acquiescence or approval of the GC Progress Schedule by the County or Engineer. None has any right or power to agree to any schedule commitment or obligation except as set forth expressly in the Contract Documents.

H. The Engineer shall have the right to require the Contractor to modify any Contractor data or any portion of the Contractor's GC Progress Schedule, Schedule of Values, as herein required, with the Contractor bearing the expense thereof, which the Engineer reasonably determines to be: (1) impracticable; (2) based upon erroneous calculations or estimates; (3) unreasonable; (4) required in order to ensure proper coordination by Contractor of the work of his Subcontractors and with the work or services being provided by any separate contractors; (5) necessary to avoid undue interference with the County's operations or those of any utility owners or adjoining property owners; (6) necessary to ensure completion of the Work by the date set forth in the Contract Documents; (7) required in order for Contractor to comply with the requirements of the Contract Documents, or (8) not in accordance with the Contractor's actual operations.

I. The GC Progress Schedule shall consist of a time-scaled, detailed Gantt chart of all activities, which are part of the Contractor's construction plan. The GC shall include, but not be limited to, the following information:

1. Project Name.

2. Activities relating to different areas of responsibility. For example, subcontractor work is distinctly separate from that being done by the Contractor directly.

3. Distinct and identifiable subdivisions of work such as mobilization, directional bore piping work, cut and cover pipe work, jack and bore piping work, water main installation, sanitary sewer installation, testing, start-up, etc.

4. Locations of work within the Project that necessitates different times or crews to perform.

5. Outage schedules for existing utility services that will be interrupted during the performance of the work.

6. Acquisition and installation of equipment and materials. Milestone Dates.

J. For all piping, precast products, and equipment to be fabricated or supplied for the Project, the GC Progress Schedule shall show a sequence of activities including:

1. Preparation of Shop Drawings and sample submissions.

2. A reasonable time for review of Shop Drawings and samples or such time as specified in the Contract Documents.

3. Shop fabrication, delivery, and storage.

4. Installation.

5. Testing of piping and equipment.

1.02 UPDATING OF GC PROGRESS SCHEDULE/PROGRESS REPORTS

A. At regularly scheduled Project Meetings, the Contractor shall arrange for his project manager and Superintendent to meet at Project Site with the Engineer and the County to review Contractor's report of actual progress prepared by Contractor. Said report shall set forth up-to-date and accurate progress data, shall be based upon Contractor's best judgment and shall be prepared by Contractor in consultation with all principal Subcontractors and Suppliers.

B. The progress report of Contractor shall show the activities or portions of activities, completed during the reporting period, the actual start and finish dates for these activities, remaining durations and/or estimated completion dates for activities currently in progress.

C. Contractor shall submit a narrative report with the updated progress analysis which shall include, but not limited to, a description of problem areas, current and anticipated delaying factors and their impact, explanations of corrective actions taken or planned, any newly planned activities or changes in sequence, and proposed logic for a Recovery Schedule, if required, as further described herein. The report shall also include:

1. A brief narrative describing actual work accomplished during the reporting period.

2. A list of construction equipment used on the Work during the reporting period and any construction equipment idle during the reporting period.

3. The total number of men by craft actually engaged in the Work during the reporting period, with such total stated separately as to office, supervisory, and field personnel.

4. A manpower and equipment forecast for the succeeding thirty (30) days, stating total number of men by craft, and separately stating such total as to office, supervisory and field personnel.

5. A list of Contractor-supplied materials and equipment, indicating current availability and anticipated jobsite delivery dates.

6. Changes or additions to Contractor's supervisory personnel since the preceding progress report.

7. Cost Reports (for lump sum contracts): Initial and subsequent Cost Reports will include the following:

   a. Percentage of value of Work in place against total value.

   b. Value of Work in place since last report.

   c. Value of Work in place to date.

   d. Value of uncompleted Work.

D. Contractor shall be solely responsible for expediting the delivery of all materials and equipment to be furnished by him so that the progress of construction shall be maintained according to the currently approved GC Progress Schedule for the Work. Contractor shall notify the Engineer in writing, and in a timely and reasonable manner, whenever Contractor determines or anticipates that the delivery date of any material or equipment to be furnished by Contractor will be later than the delivery date indicated by the GC Progress Schedule or required consistent with the completion requirements of this Contract, subject to schedule updates as herein provided.

1.03 SCHEDULE REVISIONS

A. Should the Contractor desire to or otherwise be required under the Contract Documents to make modifications or changes in his method of operation, his sequence of Work or the durations of the activities in his GC Progress Schedule, he shall do so in accordance with the requirements of the Contract Documents. Revisions to the approved GC Progress Schedule must be approved in writing by the Engineer.

B. Contractor shall submit requests for revisions to the Engineer, together with written rationale for revisions and description of logic for rescheduling work and maintaining the Date listed in the Contract Documents. Proposed revisions acceptable to the Engineer and the County will be incorporated into next update of GC Progress Schedule.

END OF SECTION

SECTION 01 40 00

QUALITY REQUIREMENTS

PART 1 - GENERAL

SUMMARY

A. Section includes administrative and procedural requirements for quality assurance and quality control.

B. Testing and inspecting services are required to verify compliance with requirements specified or indicated. These services do not relieve Contractor of responsibility for compliance with the Contract Document requirements.

1. Specific quality-assurance and quality-control requirements for individual construction activities are specified in the Sections that specify those activities. Requirements in those Sections may also cover production of standard products.

2. Specified tests, inspections, and related actions do not limit Contractor's other quality-assurance and quality-control procedures that facilitate compliance with the Contract Document requirements.

3. Requirements for Contractor to provide quality-assurance and quality-control services required by Architect, Owner, or authorities having jurisdiction are not limited by provisions of this Section.

QUALITY ASSURANCE

C. General: Qualifications paragraphs in this article establish the minimum qualification levels required; individual Specification Sections specify additional requirements.

D. Manufacturer Qualifications: A firm experienced in manufacturing products or systems similar to those indicated for this Project and with a record of successful in-service performance, as well as sufficient production capacity to produce required units.

E. Fabricator Qualifications: A firm experienced in producing products similar to those indicated for this Project and with a record of successful in-service performance, as well as sufficient production capacity to produce required units.

F. Installer Qualifications: A firm or individual experienced in installing, erecting, or assembling work similar in material, design, and extent to that indicated for this Project, whose work has resulted in construction with a record of successful in-service performance.

G. Professional Engineer Qualifications: A professional engineer who is legally qualified to practice in jurisdiction where Project is located and who is experienced in providing engineering services of the kind indicated. Engineering services are defined as those performed for installations of the system, assembly, or product that are similar in material, design, and extent to those indicated for this Project.

H. Testing Agency Qualifications: An NRTL, an NVLAP, or an independent agency with the experience and capability to conduct testing and inspecting indicated, as documented according to ASTM E 329; and with additional qualifications specified in individual Sections; and, where required by authorities having jurisdiction, that is acceptable to authorities.

I. Manufacturer's Technical Representative Qualifications: An authorized representative of manufacturer who is trained and approved by manufacturer to observe and inspect installation of manufacturer's products that are similar in material, design, and extent to those indicated for this Project.

J. Factory-Authorized Service Representative Qualifications: An authorized representative of manufacturer who is trained and approved by manufacturer to inspect installation of manufacturer's products that are similar in material, design, and extent to those indicated for this Project.

K. Mockups: Before installing portions of the Work requiring mockups, build mockups for each form of construction and finish required to comply with the following requirements, using materials indicated for the completed Work:

1. Build mockups in location and of size indicated or, if not indicated, as directed by Architect.
2. Notify Architect seven days in advance of dates and times when mockups will be constructed.
3. Demonstrate the proposed range of aesthetic effects and workmanship.
4. Obtain Architect's approval of mockups before starting work, fabrication, or construction.
5. Allow seven days for initial review and each re-review of each mockup.
6. Maintain mockups during construction in an undisturbed condition as a standard for judging the completed Work.
7. Demolish and remove mockups when directed unless otherwise indicated.

QUALITY CONTROL

L. Contractor Responsibilities: Tests and inspections are Contractor's responsibility. Perform additional quality-control activities required to verify that the Work complies with requirements, whether specified or not.

1. Unless otherwise indicated, provide quality-control services specified and those required by authorities having jurisdiction. Perform quality-control services required of Contractor by authorities having jurisdiction, whether specified or not.

2. Engage a qualified testing agency to perform these quality-control services.

3. Notify testing agencies at least 24 hours in advance of time when Work that requires testing or inspecting will be performed.

4. Where quality-control services are indicated as Contractor's responsibility, submit a certified written report, in duplicate, of each quality-control service.

5. Testing and inspecting requested by Contractor and not required by the Contract Documents are Contractor's responsibility.

6. Submit additional copies of each written report directly to authorities having jurisdiction, when they so direct.

M. Manufacturer's Field Services: Where indicated, engage a factory-authorized service representative to inspect field-assembled components and equipment installation, including service connections. Report results in writing as specified in Division 01 Section "Submittal Procedures."

N. Manufacturer's Technical Services: Where indicated, engage a manufacturer's technical representative to observe and inspect the Work. Manufacturer's technical representative's services include participation in preinstallation conferences, examination of substrates and conditions, verification of materials, observation of Installer activities, inspection of completed portions of the Work, and submittal of written reports.

O. Retesting/Reinspecting: Regardless of whether original tests or inspections were Contractor's responsibility, provide quality-control services, including retesting and reinspecting, for construction that replaced Work that failed to comply with the Contract Documents.

P. Testing Agency Responsibilities: Cooperate with Architect and Contractor in performance of duties. Provide qualified personnel to perform required tests and inspections.

1. Notify Architect and Contractor promptly of irregularities or deficiencies observed in the Work during performance of its services.

2. Determine the location from which test samples will be taken and in which in-situ tests are conducted.

3. Conduct and interpret tests and inspections and state in each report whether tested and inspected work complies with or deviates from requirements.

4. Submit a certified written report, in duplicate, of each test, inspection, and similar quality-control service through Contractor.

5. Do not release, revoke, alter, or increase the Contract Document requirements or approve or accept any portion of the Work.

6. Do not perform any duties of Contractor.

Q. Associated Services: Cooperate with agencies performing required tests, inspections, and similar quality-control services, and provide reasonable auxiliary services as requested. Notify agency sufficiently in advance of operations to permit assignment of personnel. Provide the following:

1. Access to the Work.

2. Incidental labor and facilities necessary to facilitate tests and inspections.

3. Adequate quantities of representative samples of materials that require testing and inspecting. Assist agency in obtaining samples.

4. Facilities for storage and field curing of test samples.

5. Delivery of samples to testing agencies.

6. Preliminary design mix proposed for use for material mixes that require control by testing agency.

7. Security and protection for samples and for testing and inspecting equipment at Project site.

R. Coordination: Coordinate sequence of activities to accommodate required quality-assurance and quality-control services with a minimum of delay and to avoid necessity of removing and replacing construction to accommodate testing and inspecting.

PART 2 - PRODUCTS

Not Used

PART 3 - EXECUTION

Not Used

TEST AND INSPECTION LOG

A. Test and Inspection Log: Prepare a record of tests and inspections. Include the following:

1. Date test or inspection was conducted.
2. Description of the Work tested or inspected.
3. Date test or inspection results were transmitted to Architect.
4. Identification of testing agency or special inspector conducting test or inspection.

B. Maintain log at Project site. Post changes and revisions as they occur. Provide access to test and inspection log for Architect's reference during normal working hours.

REPAIR AND PROTECTION

C. General: On completion of testing, inspecting, sample taking, and similar services, repair damaged construction and restore substrates and finishes.

1. Provide materials and comply with installation requirements specified in other Specification Sections or matching existing substrates and finishes. Restore patched areas and extend restoration into adjoining areas with durable seams that are as invisible as possible.

D. Protect construction exposed by or for quality-control service activities.

E. Repair and protection are Contractor's responsibility, regardless of the assignment of responsibility for quality-control services.

END OF SECTION

SECTION 01 50 00

TEMPORARY FACILITIES AND CONTROLS

1.01 SUMMARY DESCRIPTION

A. This Section provides the requirements for temporary facilities and controls for the Project.

B. Temporary facilities and controls shall be provided to complete the required Work and to provide safety and protection of the environment.

C. Contractor shall provide sufficient temporary equipment, supply, and labor to satisfy the general intent of this Specification.

1.02 SUBMITTALS

A. Contractor shall prepare and submit a preliminary Construction Work Plan with the bid documents generally indicating the construction procedures, equipment, and materials proposed to accomplish the Work under this Contract.

B. Contractor shall update and resubmit the Construction Work Plan within 2 weeks of his receipt of the Notice to Proceed.

C. Submit shop drawings, product and performance data, and Manufacturer's certifications under provisions of Section 01 33 00 Submittals.

1.03 CONSTRUCTION WORK PLAN

A. Updated Construction Work Plan shall provide more detail for construction procedures, equipment, and materials to be used for this Work.

B. Updated Construction Work Plan shall include details of sequencing and layouts showing the proposed location of temporary construction facilities, material storage areas, gas facilities, stockpiles, power requirements, and various equipment and facilities to be used for the Work under this Contract.

C. Construction Work Plan shall include sequencing and methods for demolition of facilities and structures.

D. Construction Work Plan shall include temporary safety facilities such as signs, lighted barricades, traffic controls, concrete barriers, berms, and high-intensity lighting.

E. Construction Work Plan shall include equipment and controls for preventing and minimizing the generation of dust due to operations in construction areas, equipment parking areas, and in waste areas. Plan may consist of water sprinkling or an equivalent service.

F. Make corrections to the preliminary Construction Work Plan as required upon receipt of the Notice to Proceed, incorporating any modifications to the construction procedures developed during the time interval.

1.04 ACCESS

A. Owner will provide general access to the site. Contractor shall not construct any staging areas or temporary facilities without the approval of Owner.

1.05 POWER

A. Provide and pay for power required for construction trailers, field office space, or any facilities and equipment utilized to conduct Work. Coordinate supply of power with Owner.

B. Contractor shall provide portable temporary electrical power generators as required for site work involving small tools, lighting, and welding equipment.

C. Contractor shall provide sufficient electric lighting so that all work may be done in a workmanlike manner when there is not sufficient daylight.

1.06 TEMPORARY HEAT, COOLING AND VENTILATION

A. If temporary heat is required for the protection of the Work, the Contractor shall provide and install suitable heating apparatus, shall provide adequate and proper fuel, and shall maintain heat as required. Costs for temporary heating, cooling, and ventilating required executing the Work shall be borne by the Contractor.

1.07 CONSTRUCTION WATER

A. Non-potable water is available from hydrants or hose valves within plant without cost. Coordinate with plant operation staffs. When combined demand of the Work and plant exceeds plant supply capacity, provide additional temporary supply capacity.

B. Remove temporary piping and connections and restore affected portions of the facility to original condition before final completion.

1.08 POTABLE WATER

A. Contractor shall provide a potable water source at the job trailer area for domestic use for employees and visitors of the job trailer. This may include a 5-gallon water bottle dispenser or 20-ounce water bottles.

B. Contractor shall be required to maintain a potable water source within close proximity to each area of Work being performed for employees and visitors to the Project area.

1.09 PROTECTION OF LAND AREAS

A. Except for any Work or storage areas and access routes specifically assigned for use of Contractor under this Contract, the land areas outside the limits of permanent Work performed under this Contract shall be preserved in their present conditions.

B. Contractor shall not be allowed to conduct Work for this Project outside of the area indicated in the drawings.

1.10 WASTE DISPOSAL

A. Any waste material resulting from the Work under this Contract, which is dumped in unauthorized areas, shall be removed by Contractor, and the area restored to the condition of the adjacent undisturbed areas.

B. Contractor shall provide a means of collecting and removing all debris, trash, and construction wastes from the site. Owner is not responsible for providing a dumpster.

C. Waste material and construction debris shall be disposed of at an appropriate off-site landfill.

1.11 BURNING

A. Burning of materials will not be allowed on site without prior approval by Owner.

B. Air pollution restrictions applicable to this Project shall conform to all Federal, State, and County regulations.

1.12 WORK LIMITS

A. Confine apparatus, equipment, the storage of materials, and the operation of workmen to the limits indicated by law, ordinances, permits, or as directed by Owner.

B. Avoid unreasonably encumbering the premises with materials or equipment.

C. Avoid interfering with Owner’s operations (if applicable).

D. Do not conduct construction activities that present a hazard to Owner’s personnel and equipment or to the public.

E. Keep the site neat, tidy, and free of waste materials or rubbish.

F. If existing facilities become damaged by Contractor, Contractor shall pay all expenses to repair or replace such facilities to the satisfaction of Owner, at no cost to Owner.

1.13 TEMPORARY DEWATERING SYSTEM

A. Contractor shall provide temporary dewatering facility for the time the dewatering building is out of service. Temporary dewatering Belt Filter Press shall be 2.2-meter, Mobile belt filter press complete with an automated flash blending polymer unit, sludge feed pump, VFD electronic controls and control room and a sludge discharge (8-10 ft. high & 12 ft. out). The temporary belt press power requirement shall be 480 V 3 phase, 100-amp breaker.

B. The temporary dewatering facility shall be capable of producing 17-20% dry cake at a loading rate 150-200 gpm of 2% biosolids.

C. Temporary dewatering system shall come with a sludge dewatering technician to set and start equipment and train the wastewater treatment plant O&M.

1.14 TEMPORARY LIGHTING

A. Contractor shall provide and maintain lighting for general construction purposes, as necessary.

1.15 TEMPORARY TOILETS

A. Provide adequate chemical toilet and hand washing facilities for all personnel and visitors. Number of facilities shall be a minimum of two or as required by federal and state Safety and Occupational Standards for the total number of personnel on-site plus two Owner’s or Engineer’s representatives, whichever is greater.

B. Keep toilets in sanitary condition and schedule routine maintenance.

C. Remove toilet facilities upon completion of the Work and disinfect the premises.

1.16 FENCES

A. When entire or part of site is to be permanently fenced, permanent fence may be built to serve for both permanent and temporary protection of the work site, provided that damaged or defaced fencing is replaced prior to final completion.

B. Protect temporary and permanent openings and close openings in existing fences to prevent intrusion by unauthorized persons. Bear responsibility for protection of plant and material on site of the Work when openings in existing fences are not closed.

C. During night hours, weekends, holidays, and other times when no work is performed at site, provide temporary closures or enlist services of security guards to protect temporary openings.

D. Fence temporary openings when openings are no longer necessary.

1.17 POST-CONSTRUCTION CLEAN-UP OR OBLITERATION

A. Contractor shall, unless otherwise instructed in writing by Owner, obliterate all signs of temporary construction facilities, such as work areas, service areas, structures, stockpiles of excess or waste materials and other vestiges of construction prior to final acceptance of the Work.

1.18 CLEAN-UP

A. During the Work, Contractor shall be responsible on a daily basis for the sanitary and physical cleanliness of the area affected by its Work. All debris, tools, hoses, ladders, and unused construction materials shall be gathered up by the end of each shift and wasted or stored in proper areas. Because other Contractors are working concurrently it is mandatory that these Work areas be kept continuously clean and orderly to prevent accidents or unwarranted use of material, tools, etc. that are for use in the Work. Upon completion of the Work, the area shall be cleared of all equipment, surplus material, and debris; such material shall be disposed of in manner approved by Owner. Contractor's Work shall be subject to stoppage by Owner if Contractor does not correct any "housekeeping" deficiencies or violations to the satisfaction of Owner within 24 hours of receipt from the notification of such deficiencies or violations.

B. Contractor shall provide a means of collecting and removing all debris, trash, and construction rubble from the site. Owner is not responsible for providing a dumpster.

(Not Used)

(Not Used)

END OF SECTION

SECTION 01 77 00

CONTRACT CLOSEOUT

PART 1 - GENERAL

1.01 SUMMARY

A. Section includes administrative and procedural requirements for contract closeout, including, but not limited to, the following:

1. Substantial Completion procedures.
2. Final completion procedures.
3. Warranties.
4. Final cleaning.
5. Repair of the Work.

1.02 SUBMITTALS

A. Product Data: For cleaning agents.

B. Contractor's List of Incomplete Items: Initial submittal at Substantial Completion.

C. Certified List of Incomplete Items: Final submittal at Final Completion.

1.03 CLOSEOUT SUBMITTALS

A. Certificates of Release: From authorities having jurisdiction.

B. Certificate of Insurance: For continuing coverage.

C. Field Report: For pest control inspection.

1.04 MAINTENANCE MATERIAL SUBMITTALS

A. Schedule of Maintenance Material Items: For maintenance material submittal items specified in other Sections.

1.05 SUBSTANTIAL COMPLETION PROCEDURES

A. Contractor's List of Incomplete Items: Prepare and submit a list of items to be completed and corrected (Contractor's punch list), indicating the value of each item on the list and reasons why the Work is incomplete.

B. Submittals Prior to Substantial Completion: Complete the following a minimum of 10 days prior to requesting inspection for determining date of Substantial Completion. List items below that are incomplete at time of request.

1. Certificates of Release: Obtain and submit releases from authorities having jurisdiction permitting Owner unrestricted use of the Work and access to services and utilities. Include occupancy permits, operating certificates, and similar releases.
2. Submit closeout submittals specified in other Division 01 Sections, including project record documents, operation and maintenance manuals, final completion construction photographic documentation, damage or settlement surveys, property surveys, and similar final record information.
3. Submit closeout submittals specified in individual Sections, including specific warranties, workmanship bonds, maintenance service agreements, final certifications, and similar documents.
4. Submit maintenance material submittals specified in individual Sections, including tools, spare parts, extra materials, and similar items, and deliver to location designated by Architect. Label with manufacturer's name and model number where applicable.
5. Submit testing, adjusting, and balancing records.
6. Submit changeover information related to Owner's occupancy, use, operation, and maintenance.

C. Procedures Prior to Substantial Completion: Complete the following a minimum of 10 days prior to requesting inspection for determining date of Substantial Completion. List items below that are incomplete at time of request.

1. Advise Owner of pending insurance changeover requirements.
2. Make final changeover of permanent locks and deliver keys to Owner. Advise Owner's personnel of changeover in security provisions.
3. Complete startup and testing of systems and equipment.
4. Perform preventive maintenance on equipment used prior to Substantial Completion.
5. Instruct Owner's personnel in operation, adjustment, and maintenance of products, equipment, and systems. Submit demonstration and training video recordings as specified.
6. Advise Owner of changeover in heat and other utilities.
7. Participate with Owner in conducting inspection and walkthrough with local emergency responders.
8. Terminate and remove temporary facilities from Project site, along with mockups, construction tools, and similar elements.
9. Complete final cleaning requirements, including touchup painting.
10. Touch up and otherwise repair and restore marred exposed finishes to eliminate visual defects.

D. Inspection: Submit a written request for inspection to determine Substantial Completion a minimum of 10 days prior to date the work will be completed and ready for final inspection and tests. On receipt of request, Architect will either proceed with inspection or notify Contractor of unfulfilled requirements. Architect will prepare the Certificate of Substantial Completion after inspection or will notify Contractor of items, either on Contractor's list or

additional items identified by Architect, that must be completed or corrected before certificate will be issued.

1. Reinspection: Request reinspection when the Work identified in previous inspections as incomplete is completed or corrected.
2. Results of completed inspection will form the basis of requirements for final completion.

1.06 FINAL COMPLETION PROCEDURES

A. Submittals Prior to Final Completion: Before requesting final inspection for determining final completion, complete the following:

1. Submit a final Application for Payment according to Payment Procedures.
2. Certified List of Incomplete Items: Submit certified copy of Architect's Substantial Completion inspection list of items to be completed or corrected (punch list), endorsed and dated by Architect. Certified copy of the list shall state that each item has been completed or otherwise resolved for acceptance.
3. Certificate of Insurance: Submit evidence of final, continuing insurance coverage complying with insurance requirements.
4. Submit final completion photographic documentation.

B. Inspection: Submit a written request for final inspection to determine acceptance a minimum of 10 days prior to date the work will be completed and ready for final inspection and tests. On receipt of request, Architect and Construction Manager will either proceed with inspection or notify Contractor of unfulfilled requirements. Architect will prepare a final Certificate for Payment after inspection or will notify Contractor of construction that must be completed or corrected before certificate will be issued.

1. Reinspection: Request reinspection when the Work identified in previous inspections as incomplete is completed or corrected.

1.07 LIST OF INCOMPLETE ITEMS (PUNCH LIST)

A. Organization of List: Include name and identification of each space and area affected by construction operations for incomplete items and items needing correction including, if necessary, areas disturbed by Contractor that are outside the limits of construction.

1. Organize list of spaces in sequential order, starting with exterior areas first and proceeding from lowest floor to highest floor.
2. Organize items applying to each space by major element, including categories for ceiling, individual walls, floors, equipment, and building systems.
3. Include the following information at the top of each page:

    a. Project name.
    b. Date.
    c. Name of Architect.

d. Name of Contractor.
e. Page number.

4. Submit list of incomplete items in the following format:

a. Three paper copies. Architect will return two copies.

1.08 SUBMITTAL OF PROJECT WARRANTIES

A. Time of Submittal: Submit written warranties on request of Architect for designated portions of the Work where commencement of warranties other than date of Substantial Completion is indicated, or when delay in submittal of warranties might limit Owner's rights under warranty.

B. Partial Occupancy: Submit properly executed warranties within 15 days of completion of designated portions of the Work that are completed and occupied or used by Owner during construction period by separate agreement with Contractor.

C. Organize warranty documents into an orderly sequence based on the table of contents of Project Manual.

1. Bind warranties and bonds in heavy-duty, three-ring, vinyl-covered, loose-leaf binders, thickness as necessary to accommodate contents, and sized to receive 8-1/2-by-11-inch paper.
2. Provide heavy paper dividers with plastic-covered tabs for each separate warranty. Mark tab to identify the product or installation. Provide a typed description of the product or installation, including the name of the product and the name, address, and telephone number of Installer.
3. Identify each binder on the front and spine with the typed or printed title "WARRANTIES," Project name, and name of Contractor.
4. Warranty Electronic File: Scan warranties and bonds and assemble complete warranty and bond submittal package into a single indexed electronic PDF file with links enabling navigation to each item. Provide bookmarked table of contents at beginning of document.

D. Provide additional copies of each warranty to include in operation and maintenance manuals.

1.09 POST-CONSTRUCTION INSPECTION:

A. Prior to expiration of 1-year Date of Substantial Completion, the Owner, Architect and Contractor will make a visual inspection of the Project to determine whether correction of Work is required, in accordance with the Conditions of the Contract.

B. Architect will notify the Contractor, in writing, of observed deficiencies. Contractor shall then correct deficiencies.

PART 2 - PRODUCTS

2.01 MATERIALS

A. Cleaning Agents: Use cleaning materials and agents recommended by manufacturer or fabricator of the surface to be cleaned. Do not use cleaning agents that are potentially hazardous to health or property or that might damage finished surfaces.

1. Use cleaning products that comply with Green Seal's GS-37, or if GS-37 is not applicable, use products that comply with the California Code of Regulations maximum allowable VOC levels.

PART 3 - EXECUTION

(Not Used)

3.01 FINAL CLEANING

A. General: Perform final cleaning. Conduct cleaning and waste-removal operations to comply with local laws and ordinances and Federal and local environmental and antipollution regulations.

B. Cleaning: Employ experienced workers or professional cleaners for final cleaning. Clean each surface or unit to condition expected in an average commercial building cleaning and maintenance program. Comply with manufacturer's written instructions.

1. Complete the following cleaning operations before requesting inspection for certification of Substantial Completion for entire Project or for a designated portion of Project:

a. Clean Project site, yard, and grounds, in areas disturbed by construction activities, including landscape development areas, of rubbish, waste material, litter, and other foreign substances.
b. Sweep paved areas broom clean. Remove petrochemical spills, stains, and other foreign deposits.
c. Rake grounds that are neither planted nor paved to a smooth, even-textured surface.
d. Remove tools, construction equipment, machinery, and surplus material from Project site.
e. Remove snow and ice to provide safe access to building.
f. Clean exposed exterior and interior hard-surfaced finishes to a dirt-free condition, free of stains, films, and similar foreign substances. Avoid disturbing natural weathering of exterior surfaces. Restore reflective surfaces to their original condition.
g. Remove debris and surface dust from limited access spaces, including roofs, plenums, shafts, trenches, equipment vaults, manholes, attics, and similar spaces.

h. Sweep concrete floors broom clean in unoccupied spaces.
i. Vacuum carpet and similar soft surfaces, removing debris and excess nap; clean according to manufacturer's recommendations if visible soil or stains remain.
j. Clean transparent materials, including mirrors and glass in doors and windows. Remove glazing compounds and other noticeable, vision-obscuring materials. Polish mirrors and glass, taking care not to scratch surfaces.
k. Remove labels that are not permanent.
l. Wipe surfaces of mechanical and electrical equipment and similar equipment. Remove excess lubrication, paint and mortar droppings, and other foreign substances.
m. Clean plumbing fixtures to a sanitary condition, free of stains, including stains resulting from water exposure.
n. Replace disposable air filters and clean permanent air filters. Clean exposed surfaces of diffusers, registers, and grills.
o. Clean ducts, blowers, and coils if units were operated without filters during construction or that display contamination with particulate matter on inspection.

    1) Clean HVAC system in compliance with NADCA ACR. Section 230130.51 "HVAC Air-Distribution System Cleaning.". Provide written report on completion of cleaning.

p. Clean light fixtures, lamps, globes, and reflectors to function with full efficiency.
q. Leave Project clean and ready for occupancy.

3.02 REPAIR OF THE WORK

A. Complete repair and restoration operations before requesting inspection for determination of Substantial Completion.

B. Repair or remove and replace defective construction. Repairing includes replacing defective parts, refinishing damaged surfaces, touching up with matching materials, and properly adjusting operating equipment. Where damaged or worn items cannot be repaired or restored, provide replacements. Remove and replace operating components that cannot be repaired. Restore damaged construction and permanent facilities used during construction to specify condition.

1. Remove and replace chipped, scratched, and broken glass, reflective surfaces, and other damaged transparent materials.
2. Touch up and otherwise repair and restore marred or exposed finishes and surfaces. Replace finishes and surfaces that that already show evidence of repair or restoration.

    a. Do not paint over "UL" and other required labels and identification, including mechanical and electrical nameplates. Remove paint applied to required labels and identification.

3. Replace parts subject to operating conditions during construction that may impede operation or reduce longevity.

4. Replace burned-out bulbs, bulbs noticeably dimmed by hours of use, and defective and noisy starters in fluorescent and mercury vapor fixtures to comply with requirements for new fixtures.

END OF SECTION

SECTION 01 78 23
OPERATION AND MAINTENANCE DATA

PART 1 - GENERAL

1.01 SUMMARY

A. Section includes administrative and procedural requirements for preparing operation and maintenance manuals.

1.02 CLOSEOUT SUBMITTALS

A. Submit operation and maintenance manuals indicated. Provide content for each manual as specified in individual Specification Sections, and as reviewed and approved at the time of Section submittals. Submit reviewed manual content formatted and organized as required by this Section.

1. Engineer will comment on whether content of operation and maintenance submittals is acceptable.

2. Where applicable, clarify and update reviewed manual content to correspond to revisions and field conditions.

B. Initial Manual Submittal: Submit draft copy of each manual at least 30 days before commencing demonstration and training. Engineer will comment on whether general scope and content of manual are acceptable.

C. Final Manual Submittal: Submit three hard copies and digital (PDF) copy of manual in final form prior to requesting inspection for Substantial Completion and at least 15 days before commencing demonstration and training. Engineer will return copy with comments.

1. Correct or revise each manual to comply with Engineer's comments. Submit copies of each corrected manual within 15 days of receipt of Engineer's comments and prior to commencing demonstration and training.

PART 2 - PRODUCTS

2.01 OPERATION AND MAINTENANCE DOCUMENTATION DIRECTORY

A. Directory: Prepare a single, comprehensive directory of emergency, operation, and maintenance data and materials, listing items and their location to facilitate ready access to desired information. Include a section in the directory for each of the following:

1. List of documents.

2. List of systems.

3. List of equipment.

4. Table of Contents.

B. List of Systems and Subsystems: List systems alphabetically. Include references to operation and maintenance manuals that contain information about each system.

C. List of Equipment: List equipment for each system, organized alphabetically by system. For pieces of equipment not part of system, list alphabetically in separate list.

D. Tables of Content: Include a table of contents for each emergency, operation, and maintenance manual.

E. Identification: In the documentation directory and in each operation and maintenance manual, identify each system, subsystem, and piece of equipment with same designation used in the Contract Documents.

2.02 REQUIREMENTS FOR OPERATION, AND MAINTENANCE MANUALS

A. Organization: Unless otherwise indicated, organize each manual into a separate section for each system and subsystem, and a separate section for each piece of equipment not part of a system. Each manual shall contain the following materials, in the order listed:

1. Title page.
2. Table of Contents.
3. Manual Contents.

B. Title Page: Include the following information:

1. Subject matter included in manual.
2. Name and address of Project.
3. Name and address of Owner.
4. Date of submittal.
5. Name and contact information for Contractor.
6. Name and contact information for Engineer.
7. Name and contact information for Commissioning Authority, if applicable.
8. Names and contact information for major consultants to the Engineer that designed the systems contained in the manuals.
9. Cross-reference to related systems in other operation and maintenance manuals.

C. Table of Contents: List each product included in manual, identified by product name, indexed to the content of the volume, and cross-referenced to Specification Section number in Project Manual.

1. If operation maintenance documentation requires more than one volume to accommodate data, include comprehensive table of contents for all volumes in each volume of the set.

D. Manual Contents: Organize into sets of manageable size. Arrange contents alphabetically by system, subsystem, and equipment. If possible, assemble instructions for subsystems, equipment, and components of one system into a single binder.

E. Manuals, Paper Copy: Submit manuals in the form of hard copy, bound and labeled volumes.

1. Binders: Heavy-duty, three-ring, vinyl-covered, loose-leaf binders, in thickness necessary to accommodate contents, sized to hold 8-1/2-by-11-inch paper; with clear plastic sleeve on spine to hold label describing contents and with pockets inside covers to hold folded oversize sheets.

a. If two or more binders are necessary to accommodate data of a system, organize data in each binder into groupings by subsystem and related components. Cross-reference other binders if necessary to provide essential information for proper operation or maintenance of equipment or system.

b. Identify each binder on front and spine, with printed title "OPERATION AND MAINTENANCE MANUAL," Project title or name, and subject matter of contents, and indicate Specification Section number on bottom of spine. Indicate volume number for multiple-volume sets.

2. Dividers: Heavy-paper dividers with plastic-covered tabs for each section of the manual. Mark each tab to indicate contents. Include typed list of products and major components of equipment included in the section on each divider, cross-referenced to Specification Section number and title of Project Manual.

3. Protective Plastic Sleeves: Transparent plastic sleeves designed to enclose diagnostic software storage media for computerized electronic equipment.

4. Supplementary Text: Prepared on 8-1/2-by-11-inch white bond paper.

5. Drawings: Attach reinforced, punched binder tabs on drawings and bind with text.

a. If oversize drawings are necessary, fold drawings to same size as text pages and use as foldouts.

b. If drawings are too large to be used as foldouts, fold and place drawings in labeled envelopes and bind envelopes in rear of manual. At appropriate locations in manual, insert typewritten pages indicating drawings titles, descriptions of contents, and drawing locations.

2.03 OPERATION DATA

A. Content: In addition to requirements in this Section, include operation data required in individual Specification Sections and the following information. Initial set points are to be established during test and balancing of the system.

1. System, subsystem, and equipment descriptions. Use designations for systems and equipment indicated on Contract Documents.

2. Performance and design criteria if Contractor has delegated design responsibility.

3. Operating standards.

4. Operating procedures.
5. Operating logs.
6. Wiring diagrams.
7. Control diagrams.
8. Piped system diagrams.
9. Precautions against improper use.
10. License requirements including inspection and renewal dates.

B. Descriptions: Include the following:

1. Product name and model number. Use designations for products indicated on Contract Documents.
2. Manufacturer's name.
3. Equipment identification with serial number of each component.
4. Equipment function.
5. Operating characteristics.
6. Limiting conditions.
7. Performance curves.
8. Engineering data and tests.
9. Complete nomenclature and number of replacement parts.

C. Operating Procedures: Include the following, as applicable:

1. Startup Procedures.
2. Equipment or system break-in procedures.
3. Routine and normal operating instructions.
4. Regulation and control procedures.
5. Instructions on stopping.
6. Normal shutdown instructions.
7. Seasonal and weekend operating instructions.
8. Required sequences for electric or electronic systems.
9. Special operating instructions and procedures.

D. Systems and Equipment Controls: Describe the sequence of operation, and diagram controls as installed.

E. Piped Systems: Diagram piping as installed, and identify color-coding where required for identification.

2.04 PRODUCT MAINTENANCE DATA

A. Content: Include source information, product information, maintenance procedures, repair materials and sources, and warranties and bonds, as described below.

B. Source Information: List each product included in manual identified by product name and arranged to match manual's table of contents. For each product, list name, address, and telephone number of Installer or supplier and maintenance service agent, and cross-reference Specification Section number and title in Project Manual and drawing or schedule designation or identifier where applicable.

C. Product Information: Include the following, as applicable:

1. Product name and model number.
2. Manufacturer’s Name.
3. Color, pattern, and texture.
4. Material and chemical composition.
5. Reordering information for specially manufactured products.

D. Maintenance Procedures: Include manufacturer's written recommendations and the following:

1. Inspection procedures.
2. Types of cleaning agents to be used and methods of cleaning.
3. List of cleaning agents and methods of cleaning detrimental to product.
4. Schedule for routine cleaning and maintenance.
5. Repair instructions.

E. Repair Materials and Sources: Include lists of materials and local sources of materials and related services.

F. Warranties and Bonds: Include copies of warranties and bonds and lists of circumstances and conditions that would affect validity of warranties or bonds.

1. Include procedures to follow and required notifications for warranty claims.

2.05 STSTEMS AND EQUIPMENT MAINTENANCE DATA

A. Content: For each system, subsystem, and piece of equipment not part of a system, include source information, manufacturers' maintenance documentation, maintenance procedures, maintenance and service schedules, spare parts list and source information, maintenance service contracts, and warranty and bond information, as described below.

B. Source Information: List each system, subsystem, and piece of equipment included in manual identified by product name and arranged to match manual's table of contents. For each product, list name, address, and telephone number of Installer or supplier and maintenance service agent, and cross-reference Specification Section number and title in Project Manual and drawing or schedule designation or identifier where applicable.

C. Manufacturers’ Maintenance Documentation: Manufacturers' maintenance documentation including the following information for each component part or piece of equipment:

1. Standard maintenance instructions and bulletins.
2. Drawings, diagrams, and instructions required for maintenance, including disassembly and component removal, replacement, and assembly.
3. Identification and nomenclature of parts and components.
4. List of items recommended to be stocked as spare parts.

D. Maintenance Procedures: Include the following information and items that detail essential maintenance procedures:

1. Test and inspection instructions.
2. Troubleshooting guide.
3. Precautions against improper maintenance.
4. Disassembly; component removal, repair, and replacement; and reassembly instructions.
5. Aligning, adjusting, and checking instructions.
6. Demonstration and training video recording, if available.

E. Maintenance and Service Schedules: Include service and lubrication requirements, list of required lubricants for equipment, and separate schedules for preventive and routine maintenance and service with standard time allotment.

1. Scheduled Maintenance and Service: Tabulate actions for daily, weekly, monthly, quarterly, semiannual, and annual frequencies.
2. Maintenance and Service Record: Include manufacturers' forms for recording maintenance.

F. Spare Parts List and Source Information: Include lists of replacement and repair parts, with parts identified and cross-referenced to manufacturers' maintenance documentation and local sources of maintenance materials and related services.

G. Maintenance Service Contracts: Include copies of maintenance agreements with name and telephone number of service agent.

H. Warranties and Bonds: Include copies of warranties and bonds and lists of circumstances and conditions that would affect validity of warranties or bonds.

1. Include procedures to follow and required notifications for warranty claims.

PART 3 - EXECUTION

3.01 MANUAL PREPARATION

A. Operation and Maintenance Documentation Directory: Prepare a separate manual that provides an organized reference to emergency, operation, and maintenance manuals.

B. Operation and Maintenance Manuals: Assemble a complete set of operation and maintenance data indicating operation and maintenance of each system, subsystem, and piece of equipment not part of a system.

1. Engage a factory-authorized service representative to assemble and prepare information for each system, subsystem, and piece of equipment not part of a system.
2. Prepare a separate manual for each system and subsystem, in the form of an instructional manual for use by Owner's operating personnel.

C. Manufacturers' Data: Where manuals contain manufacturers' standard printed data, include only sheets pertinent to product or component installed. Mark each sheet to identify each product or component incorporated into the Work. If data include more than one item in a tabular format, identify each item using appropriate references from the Contract Documents. Identify data applicable to the Work and delete references to information not applicable.

1. Prepare supplementary text if manufacturers' standard printed data are not available and where the information is necessary for proper operation and maintenance of equipment or systems.

D. Drawings: Prepare drawings supplementing manufacturers' printed data to illustrate the relationship of component parts of equipment and systems and to illustrate control sequence and flow diagrams. Coordinate these drawings with information contained in record Drawings to ensure correct illustration of completed installation.

1. Do not use original project record documents as part of operation and maintenance manuals.
2. Comply with requirements of newly prepared record Drawings in Division 01 Section "Project Record Documents."

END OF SECTION

SECTION 01 78 39

PROJECT RECORD DOCUMENTS

PART 1 - GENERAL

1.01 SUMMARY

A. Section includes administrative and procedural requirements for project record documents, including the following:

1. Record Drawings.
2. Record Specifications.

B. Compliance with the requirements of this Section shall be a condition to progress payments and final payment. Final payment shall not be processed until the Architect is satisfied that these recording procedures are being complied with and are up to date.

1.02 CLOSEOUT SUBMITTALS

A. Record Drawings: Mark-ups for all subcontractors shall be consolidated onto a single set of record prints which shall be reviewed monthly and initialed by the architect/engineer. Upon completion, submit one set of marked-up record prints.

B. Record Specifications: Submit one paper copy of Project's Specifications, including addenda and contract modifications.

PART 2 - PRODUCTS

2.01 RECORD DRAWINGS

A. Record Prints: Maintain one set of marked-up paper copies of the Contract Drawings and Shop Drawings, incorporating new and revised drawings as modifications are issued.

1. Preparation: Mark record prints to show the actual installation where installation varies from that shown originally. Require individual or entity who obtained record data, whether individual or entity is Installer, subcontractor, or similar entity, to provide information for preparation of corresponding marked-up record prints.

a. Give particular attention to information on concealed elements that would be difficult to identify or measure and record later.
b. Accurately record information in an acceptable drawing technique.
c. Record data as soon as possible after obtaining it.
d. Record and check the markup before enclosing concealed installations.

e. Cross-reference record prints to corresponding photographic documentation.

2. Content: Types of items requiring marking include, but are not limited to, the following:

   a. Dimensional changes to Drawings.
   b. Revisions to details shown on Drawings.
   c. Depths of foundations.
   d. Locations and depths of underground utilities.
   e. Revisions to routing of piping and conduits.
   f. Revisions to electrical circuitry.
   g. Actual equipment locations.
   h. Duct size and routing.
   i. Locations of concealed internal utilities.
   j. Changes made by Change Order or Construction Change Directive.
   k. Changes made following Architect's written orders.
   l. Details not on the original Contract Drawings.
   m. Field records for variable and concealed conditions.
   n. Record information on the Work that is shown only schematically.

3. Mark the Contract Drawings and Shop Drawings completely and accurately. Use personnel proficient at recording graphic information in production of marked-up record prints.
4. Mark record sets with erasable, red-colored pencil. Use other colors to distinguish between changes for different categories of the Work at same location.
5. Mark important additional information that was either shown schematically or omitted from original Drawings.
6. Note Architects Supplemental Instruction numbers, Construction Change Directive numbers, alternate numbers, Change Order numbers, and similar identification, where applicable.
7. Attach all associated drawing information provided with ASI’s, CCD’s and CO’s to the marked record set.

2.02 RECORD SPECIFICATIONS

A. Preparation: Mark Specifications to indicate the actual product installation where installation varies from that indicated in Specifications, addenda, and contract modifications.

1. Give particular attention to information on concealed products and installations that cannot be readily identified and recorded later.
2. Mark copy with the proprietary name and model number of products, materials, and equipment furnished, including substitutions and product options selected.
3. Record the name of manufacturer, supplier, Installer, and other information necessary to provide a record of selections made.
4. For each principal product, indicate whether record Product Data has been submitted in operation and maintenance manuals instead of submitted as record Product Data.

5. Note related Change Orders and record Drawings where applicable.

B. Format: Submit record Specifications as paper and digital (PDF) copy.

PART 3 - EXECUTION

3.01 RECORDING AND MAINTENANCE

A. Recording: Maintain one copy of each submittal during the construction period for project record document purposes. Post changes and revisions to project record documents as they occur; do not wait until end of Project.

B. Maintenance of Record Documents and Samples: Store record documents and Samples in the field office apart from the Contract Documents used for construction. Do not use project record documents for construction purposes. Maintain record documents in good order and in a clean, dry, legible condition, protected from deterioration and loss. Provide access to project record documents for Architect's reference during normal working hours.

END OF SECTION

"This page intentionally left blank."

SECTION 01 79 00

DEMONSTRATION AND TRAINING

PART 1 - GENERAL

1.01 SUMMARY

A. This Section includes administrative and procedural requirements for instructing The Service's personnel, including the following:

1. Demonstration of operation of systems, subsystems, and equipment.

2. Training in operation and maintenance of systems, subsystems, and equipment.

B. Related Sections include the following:

1. Division 1 Section "Project Management and Coordination" for requirements for pre-instruction conferences.

2. Division 1 Section "Photographic Documentation" for preparing and submitting demonstration and training videotapes.

C. Allowances: Furnish demonstration and training instruction time under the Demonstration and Training Allowance as specified in Division 1 Section "Demonstration and Training."

D. Unit Price for Instruction Time: Length of instruction time will be measured by actual time spent performing demonstration and training in required location. No payment will be made for time spent assembling educational materials, setting up, or cleaning up.

1.03 SUBMITTALS

A. Instruction Program: Submit two copies of outline of instructional program for demonstration and training, including a schedule of proposed dates, times, length of instruction time, and instructors' names for each training module. Include learning objective and outline for each training module.

1. At completion of training, submit one complete training manuals for The Service's use.

B. Qualification Data: For firms and persons specified in "Quality Assurance" Article to demonstrate their capabilities and experience. Include lists of completed projects with project names and addresses, names and addresses of Engineers and Owners, and other information specified.

C. Attendance Record: For each training module, submit list of participants and length of instruction time.

D. Evaluations: For each participant and for each training module, submit results

and documentation of performance-based test.

E. Demonstration and Training Videotape: Submit two copies at end of each training module.

1.04 QUALITY ASSURANCE

A. Facilitator Qualifications: A firm or individual experienced in training or educating maintenance personnel in a training program similar in content and extent to that indicated for this Project, and whose work has resulted in training or education with a record of successful learning performance.

B. Instructor Qualifications: A factory-authorized service representative, complying with requirements in Division 1 Section "Quality Requirements," experienced in operation and maintenance procedures and training.

C. Pre-instruction Conference: Conduct conference at Project site to comply with requirements in Division 1 Section "Project Management and Coordination." Review methods and procedures related to demonstration and training including, but not limited to, the following:

1. Inspect and discuss locations and other facilities required for instruction.

2. Review and finalize instruction schedule and verify availability of educational materials, instructors' personnel, audiovisual equipment, and facilities needed to avoid delays.

3. Review required content of instruction.

4. For instruction that must occur outside, review weather and forecasted weather conditions and procedures to follow if conditions are unfavorable.

1.05 COORDINATION

A. Coordinate instruction schedule with The Service's operations. Adjust schedule as required to minimize disrupting The Service's operations.

B. Coordinate instructors, including providing notification of dates, times, length of instruction time, and course content.

C. Coordinate content of training modules with content of approved emergency, operation, and maintenance manuals. Do not submit instruction program until operation and maintenance data has been reviewed and approved by Engineer.

PART 2 - PRODUCTS

2.01 INSTRUCTION PROGRAM

A. Program Structure: Develop an instruction program that includes individual training modules for each system and equipment not part of a system, as required by individual Specification Sections.

B. Training Modules: Develop a learning objective and teaching outline for each module. Include a description of specific skills and knowledge that participant is expected to

master. For each module, include instruction for the following:

1. Basis of System Design, Operational Requirements, and Criteria: Include the following:

    a. System, subsystem, and equipment descriptions.

    b. Performance and design criteria if Contractor is delegated design responsibility.

    c. Operating standards.

    d. Regulatory requirements.

    e. Equipment function.

    f. Operating characteristics.

    g. Limiting conditions.

    h. Performance curves.

2. Documentation: Review the following items in detail:

    a. Emergency manuals.

    b. Operations manuals.

    c. Maintenance manuals.

    d. Project Record Documents.

    e. Identification systems.

    f. Warranties and bonds.

    g. Maintenance service agreements and similar continuing commitments.

3. Emergencies: Include the following, as applicable:

    a. Instructions on meaning of warnings, trouble indications, and error messages.

    b. Instructions on stopping.

    c. Shutdown instructions for each type of emergency.

    d. Operating instructions for conditions outside of normal operating limits.

    e. Sequences for electric or electronic systems.

    f. Special operating instructions and procedures.

4. Operations: Include the following, as applicable:

   a. Startup procedures.

   b. Equipment or system break-in procedures.

   c. Routine and normal operating instructions.

   d. Regulation and control procedures.

   e. Control sequences.

   f. Safety procedures.

   g. Instructions on stopping.

   h. Normal shutdown instructions.

   i. Operating procedures for emergencies.

   j. Operating procedures for system, subsystem, or equipment failure.

   k. Seasonal and weekend operating instructions.

   l. Required sequences for electric or electronic systems.

   m. Special operating instructions and procedures.

5. Adjustments: Include the following

   a. Alignments.

   b. Checking adjustments.

   c. Noise and vibration adjustments.

   d. Economy and efficiency adjustments.

6. Troubleshooting: Include the following:

   a. Diagnostic instructions.

   b. Test and inspection procedures.

7. Maintenance: Include the following:

   a. Inspection procedures.

   b. Types of cleaning agents to be used and methods of cleaning.

   c. List of cleaning agents and methods of cleaning detrimental to product.

d. Procedures for routine cleaning

e. Procedures for preventive maintenance.

f. Procedures for routine maintenance.

g. Instruction on use of special tools.

8. Repairs: Include the following:

a. Diagnosis instructions.

b. Repair instructions.

c. Disassembly; component removal, repair, and replacement; and reassembly instructions.

d. Instructions for identifying parts and components.

e. Review of spare parts needed for operation and maintenance.

PART 3 - EXECUTION

3.01 PREPARATION

A. Assemble educational materials necessary for instruction, including documentation and training module. Assemble training modules into a combined training manual.

B. Set up instructional equipment at instruction location.

3.02 INSTRUCTION

A. Facilitator: Engage a qualified facilitator to prepare instruction program and training modules, to coordinate instructors, and to coordinate between Contractor and The Service for number of participants, instruction times, and location.

B. Engage qualified instructors to instruct The Service's personnel to adjust, operate, and maintain systems, subsystems, and equipment not part of a system.

1. Engineer will furnish an instructor to describe basis of system design, operational requirements, criteria, and regulatory requirements.

2. The Service will furnish an instructor to describe The Service's operational philosophy.

3. The Service will furnish Contractor with names and positions of participants.

C. Scheduling: Provide instruction at mutually agreed on times. For equipment that

requires
seasonal operation, provide similar instruction at start of each season.

1. Schedule training with The Service with at least seven days' advance notice.

D. Evaluation: At conclusion of each training module, assess and document each participant's mastery of module by use of a written performance-based test.

E. Demonstration and Training Video tape: Record each training module separately. Include classroom instructions and demonstrations, board diagrams, and other visual aids, but not student practice.

1. Comply with requirements in Division 1 Section "Photographic Documentation."

2. At beginning of each training module, record each chart containing learning objective and lesson outline.

F. Cleanup: Collect used and leftover educational materials and remove from Project site. Remove instructional equipment. Restore systems and equipment to condition existing before initial training use.

END OF SECTION

SECTION 02 41 13

SITE DEMOLITION

PART 1 - GENERAL

1.1 DESCRIPTION

A. This section describes demolition of items specified herein and shown on the drawings.

1.2 RELATED WORK SPECIFIED ELSEWHERE

A. Section 312000, Site Clearing and Earthwork

1.3 DEFINITIONS

A. Demolish: Completely remove and legally dispose of off the site.

B. Pavement Removal: Asphalt and Portland cement concrete pavement, curbs, and sidewalks excavated full depth.

C. Cold Plane Pavement Removal:

1. Asphalt concrete removed to a specified depth from existing pavement surface by cold planning.

2. Portland cement concrete removed to a specified depth from existing pavement surface by cold planning or grinding.

1.4 WORK ITEMS

A. The work includes but is not limited to, demolition of the following:

1. Slabs:

a. Concrete building slabs.

b. Concrete steps and porches.

2. Footings:

a. Concrete or block building footings and foundations not associated with basements.

3. Pavement:

a. Asphaltic or portland cement concrete surfacing and any associated base material.

b. Curbing.

c. Sidewalks, driveways, parking areas, etc.

d. Aggregate surfacing.

4. Cellar: Concrete basements together with footing, foundation walls and floor slabs. Debris shall include but is not limited to:

a. Concrete, asphalt, stone, brick, tile, etc.

b. Building wood, glass, tar paper, metal, cloth, paper, etc.

c. Be responsible for removing material dumped within the work areas during the time of the contract.

5. Buildings include:

a. Houses, sheds, warehouses, barns, trailer houses, etc.

b. Footings, slabs, fireplaces, etc., for the buildings.

c. Underground disposal system associated with the building.

6. Materials or structures called out by word description on the drawings or in the specifications shall be included as work items.

PART 2 - PRODUCTS

Not Used.

PART 3 - EXECUTION

3.1 GENERAL

A. Demolish and remove all work items within area in the manner specified.

B. Stones and/or concrete rubble 12 inches or larger shall be disposed of off the site.

3.2 ENVIRONMENTAL CONSIDERATIONS

A. Nuisance Dust Control:

1. Demolition debris that contains dust or other material that could become airborne or create a nuisance shall either be removed from the work site daily or shall be covered and secured with tarps or sheeting until removed from the site.

2. Apply a water mist on debris to control or mitigate airborne dust or airborne nuisances, unless the material will become friable (i.e., crumble easily) or will dissolve in water. Friable material and material that may dissolve in water shall be securely covered with tarps or sheeting.

3. Demolition debris that becomes friable when wetted or will dissolve in water shall be

stored only on impervious surfaces, field-installed ground sheeting, or other barriers.

B. Demolition Debris:

1. The Contractor shall manage demolition material as hazardous waste or solid waste in accordance with these specifications.

2. Unless specifically identified in the contract documents or approved by the owner, no demolition debris shall be placed as fill material or otherwise disposed of on owner's property.

3. The Contractor shall minimize the volume of accumulated demolition debris.

4. Metal and other material salvage or recycling operations shall be performed in a defined area within the work site.

5. Salvage by cutting torch or other mechanical cutting means of any vessel, tank, pipe, or other equipment that contains any liquid (except potable water) shall not be performed at the work site unless prior written approval has been obtained from the owner.

6. Temporary storage and piling of demolition debris within 50 feet of the property line is not permitted unless storage piles are covered and secured with tarps or sheeting. The owner may waive this requirement if the material does not contain dust or other materials that could become airborne or contaminate stormwater.

3.3 BUILDING DEMOLITION AND/OR REMOVAL WITHIN THE WORK AREA

A. The work area is defined as the area within 50 feet of the edges of the building.

B. Remove buildings by demolition or relocation. Debris resulting from demolition of buildings shall be immediately removed from the site.

C. Underground Structures:

1. Break cellar and concrete tank walls off to a minimum depth of 2 feet below adjacent ground level.

2. Break openings through concrete floors and tank bottoms to provide a minimum of one square foot of opening per 100 square feet of floor area.

D. Cap and seal sewer, drainage, and water lines at a minimum of 2 feet below adjacent ground
level.

E. Brush and trees may be removed to facilitate removal of buildings.

3.4 MISCELLANEOUS DEMOLITION AND/OR REMOVAL WITHIN THE WORK AREA

A. The work area is defined as the area within 25 feet of the edges of the work item.

B. Work items include slabs, footings, pavement, cellars, debris, and materials or structures other than buildings called out by the work description on the drawings.

C. Underground Structures: Comply with Article 3.3 above.

D. No trees shall be removed unless necessary for the completion of the specified work. If a tree must be removed, its stump must also be removed. No extra payment will be made for tree removal. \

E. Blasting will not be permitted.

3.5 REMOVAL AND PLUGGING OF ABANDONED PIPES, AND MISCELLANEOUS STRUCTURES

A. Abandoned pipes or portions of other exposed items shall be removed a minimum of 2 feet back of face of slope or 2 feet below subgrade.

B. Cap or plug the ends of partially removed pipes, culverts, and miscellaneous structures with concrete to produce a watertight seal.

C. Contact the owner for direction if unidentified utilities are uncovered during the work.

D. Dispose of removed pipes, and miscellaneous structures off the property, at no added cost.

3.6 PAVEMENT REMOVAL

A. Remove pavement to the limits shown on the drawings. Replace pavement removed beyond the limits without owner's approval as directed and at no added cost.

B. Dispose of pavement removal off the property.

3.7 COLD PLANE PAVEMENT REMOVAL

A. Using a cold planer or grinder, excavate to the limits and depths shown on the drawings.

B. Leave the bottom of the removal area in a roughened condition.

C. Sweep or vacuum the removal area to remove loose asphalt, rock, dirt, and other foreign materials.

D. Dispose of swept and/or vacuumed material off the site.

E. Asphalt concrete cold planer cuttings may be used as aggregate base course. Gradation shall be 95-100 percent passing the 1 1/2-inch sieve and 0-15 percent passing the #200 sieve. Dispose of excess off the site.

3.8 SITE RESTORATION

A. Clear and scarify the surface of the work area to achieve a smooth and bare earth surface free of heavy growth of vegetation and cut natural growth and/or foreign

material. Such surface may be obtained by dragging blade or bucket from demolition equipment over the work area.

B. Standing brush and trees may be left in the work area at the Contractor's option.

C. Grade fill material and borrow sites in a manner to avoid causing interference with existing drainage patterns and to avoid water ponding.

D. Fill shall be made with existing earth from the site and compacted to the extent that it will support rubber-tired construction equipment.

E. Concrete and aggregate may, at the Contractor's option, be used as fill material provided at least a 2-foot cover of earth is obtained over such material.

3.9 DISPOSAL OF DEMOLISHED MATERIALS

A. Remove demolition waste materials from the work site and dispose of them off the site in
accordance with local, state, and federal laws and regulations.

1. Do not allow demolished materials to accumulate on-site.

2. Remove and transport debris in a manner that will prevent spillage on adjacent surfaces and areas.

B. Do not burn demolished materials.

3.10 CLEANING

A. Clean adjacent structures and improvements of dust, dirt, and debris caused by building demolition operations. Return adjacent areas to condition existing before building demolition
operations began.

END OF SECTION

SECTION 03 10 00

CONCRETE FORMWORK

PART 1 - GENERAL

1.1 DESCRIPTION

A. Provide design and furnish materials for fabricating, erecting and removing formwork, falsework and shoring for cast-in-place concrete as indicated and in compliance with Contract Documents.

B. Use formwork to cast all cast-in-place concrete structures.

1.2 REFERENCES

A. American Concrete Institute (ACI):

1. 117/117R: Standard Tolerances for Concrete Construction and Materials.

2. 309.2R: Identification and Control of Visible Effects of Consolidation on Formed Concrete Surfaces.

3. 318/318R: Building Code Requirements for Structural Concrete and Commentary.

4. 347: Guide to Formwork for Concrete.

B. Engineered Wood Association (APA)

C. National Institute of Product Standards and Technology

1. Voluntary Product Standard PS 1 Structural Plywood

1.3 DESIGN REQUIREMENTS

A. Design formwork in conformance with methodology of ACI 347R for anticipated loads, lateral pressures, depth of concrete placement and rate of concrete placement. Design shall consider any special requirements due to the use of self-consolidating, plasticized and/or retarded set concrete. All forms and shoring shall be designed at the contractor’s expense.

1.4 QUALIFICATIONS

A. Formwork Designer: Formwork, falsework, and shoring design shall be by an engineer licensed in the State where the Project is located.

1.5 SUBMITTALS

A. Submit product data for form ties, spreaders, chamfer strips, form coatings, and bond breakers.

B. Submit following shop drawings in accordance with 01 33 00.

1. Form Ties-Tapered Through-Bolts: Proposed method of sealing form tie holes.

1.6 QUALITY ASSURANCE

A. Comply with requirements in section 01 40 00 and as specified.

B. Design of Formwork:

1. The Contractor shall assume responsibility for the design, engineering and construction of formwork. Forms shall be designed to produce concrete members identical in shape, lines and dimensions to members shown on the Contract Documents.

2. When high range water reducer (superplasticizer) is used in concrete mix or when self-consolidated concrete is specified, forms shall be designed for full hydrostatic pressure per ACI 347.

3. The formwork shall be designed for the loads and lateral pressures in accordance with ACI 347 and wind loads as specified by the local building code.

4. Construction and contraction joints, openings, offsets, keyways, recesses, moldings, chamfers, blocking, screeds, bulkheads, water stops, anchorages, inserts, and other features shall be provided.

5. Formwork shall be designed to be readily removable without impact, shock, or damage to 'green' concrete surfaces and adjacent materials.

6. The maximum panel deflection shall be 1/360 of the span between structural members.

C. Unless otherwise specified herein, formwork shall be constructed so that the concrete surfaces will conform to the tolerance limits as given in ACI 117.

D. Materials, fabrications and workmanship found defective shall be promptly removed and replaced and new acceptable work shall be provided in accordance with Contract requirements at no additional cost to the owner.

1.7 DELIVERY, STORAGE AND HANDLING

A. Materials shall be delivered to the site in an undamaged condition and at such intervals as will avoid delay in the work.

B. Material shall be stored and protected in a clean, properly drained location. Material shall be kept off the ground under a weather-tight covering permitting good air circulation. Formwork materials shall be stored on dry wood sleepers, pallets, platforms or other appropriate supports which have slope for positive drainage. Materials shall be protected from distortion, excessive stresses, corrosion and other damage. Materials shall not be stored on the structure in a manner that might cause distortion or damage to the supporting structure.

PART 2 - PRODUCTS

2.1 LUMBER

A. Lumber used in form construction shall be Douglas fir, No. 2 grade, S4S, Standard Grading and Dressing Rules No. 16, West Coast Lumber Inspection Bureau; or Southern Yellow Pine, No. 2, S4S, Standard Grade Rules Southern Pine Inspection Bureau. Boards shall be 6 inches or more in width.

2.2 PLYWOOD

A. Only grade-marked plywood conforming to APA shall be provided.

B. Plywood used in form construction shall be Grade B-B, Class 1 plyform, mill-oiled, and sanded on both sides in conformance with U.S. Product Standard PS 1 Structural Plywood.

C. Thickness shall be sized to maintain alignment and surface smoothness, but not less than 5/8-inch thick.

2.3 STEEL FORMS

A. Commercial grade sheets not less than 16 gage shall be provided.

B. Stock material that is free from warps, bends, kinks, cracks, and rust or other matter that could stain the concrete shall be provided.

2.4 FORM MATERIAL LOCATIONS

A. Wall Forms and Underside of Slabs and Beams:

1. Materials: Plywood, hard plastic finished plywood, overlaid waterproof particleboard, or steel in new and undamaged condition, of sufficient strength and surface smoothness to produce specified finish.

B. Column Forms:

1. Rectangular Columns: As specified for walls.

C. All Other Forms: Materials as specified for wall forms.

D. Rustication Grooves and Chamfer Strips: Nonabsorbent material, compatible with form surface, fully sealed on all sides prohibiting loss of paste or water between the two surfaces.

2.5 FORM TIES

A. Locate form ties on exposed surfaces in a uniform pattern. Place form ties so they remain embedded in the concrete except for a removable portion at each end. Form ties shall have conical or spherical type inserts with a maximum diameter of 1 inch. Construct form ties so that no metal is within 1-1/2 inch of the concrete surface when the forms, inserts, and tie ends are removed. Do not use wire ties. Ties shall withstand all pressures and maintain forms within acceptable deflection limits.

B. Flat bar ties for panel forms shall have plastic or rubber inserts having a minimum depth of 1-1/2 inch and sufficient dimensions to permit patching of the tie hole.

C. Tapered form ties shall be tapered through-bolts or through-bolts that utilize a removable tapered sleeve.

D. Wire ties are not permitted.

E. Water Stop Ties: For basements and accessible spaces below finish grade, furnish one of the following:

1. Integral steel water stop 0.103 inch thick and 0.625 inch in diameter tightly and continuously welded to tie.

2. Neoprene water stop 3/16-inch thick and 15/16 inch diameter whose center hole is one-half diameter of tie, or molded plastic water stop of comparable size.

F. Elastic Vinyl Plug:

1. Design and size of plug shall allow insertion with tool to enable plug to elongate and return to original length and diameter upon removal forming watertight seal.

2. Manufacturer:

a. Dayton Superior, Miamisburg, OH; A58 Sure Plug.

G. Mechanical EPDM Rubber Plug:

1. Mechanical plug for taper tie

2. Manufacturers:

a. Greenstreak Group Inc.

3. Friction fit plugs will not be allowed.

2.6 BOND BREAKER

A. Bond breaker shall be a V.O.C.-compliant nonstaining type that will provide a positive bond prevention.

B. Manufacturers:

1. Dayton Superior; Sure Lift J6WB.

2. Nox-Crete, Inc.; Silcoseal Select.

2.7 FORM CAULKING

A. Form caulking shall be a one-component, gun-grade silicone sealant that is capable of producing flush, watertight and non-absorbent surfaces and joints. Sealant shall be compatible with the type of forming material and concrete ingredients used.

2.8 CHAMFER STRIPS

A. Provide 3/4 inch by 3/4-inch chamfer strips milled from clear, straight-grain pine, surfaced each side, or having extruded vinyl type with or without nailing flange unless otherwise shown on the Contract Documents.

2.9 INSERTS

A. Provide galvanized cast steel or galvanized welded steel inserts, complete with anchors to concrete and fittings such as bolts, wedges and straps.

2.10 FORM RELEASE AGENT

A. Form release agent shall not bond with, stain, or adversely affect concrete surfaces and shall not impair subsequent treatments of concrete surfaces when applied to forms. A ready-to-use water-based material formulated to reduce or eliminate surface imperfections and containing no mineral oil or organic solvents.

B. Manufacturers and Products:

1. BASF; MasterFinish RL 211.

2. Cresset Chemical Company; Crete-Lease 20-VOC.

3. Dayton Superior; Magic Kote.

PART 3 - EXECUTION

3.1 FORM TOLERANCES

A. Comply with the requirements of ACI 117 for tolerances for formed surfaces except as specified in Table 03 1000-1.

Table 03 1000-1	
Vertical alignment (plumbness)	1/4-inch in any 10 feet and 1-inch maximum for entire length
Variation in the lines and surfaces of foundation mats, base slabs and walls	1/4-inch in any 10 feet and 1-inch max. for entire length
Variation from the level or from the grades indicated on the drawings	1/4-inch in any 10 feet
Variation of the linear building lines from established position in plan	1/2-inch in any 20 feet and 1-inch maximum for entire length
Variation of distance between walls	1/4-inch in any 10 feet and 1-inch maximum for entire length and height
Variation in the sizes and locations of sleeves, floor openings and wall openings	Minus 1/4-inch. Plus 1/2-inch.
Variation in cross-sectional dimensions of columns and beams and in the thickness of slabs and walls	Minus 1/4-inch. Plus 1/2-inch.
Offset between adjacent panels of formwork facing material	1/2-inch (ACI 117 Class C finish).
Offset between adjacent panels of formwork facing material for exposed surfaces where appearance is of importance	1/8-inch (ACI 117 Class A finish).

B. Tolerances are not cumulative

C. Where equipment is to be installed, comply with manufacturer's tolerances if more restrictive than above.

D. Failure of the forms to produce the specified concrete surface and surface tolerance shall be grounds for rejection of the concrete work. Rejected work shall be repaired or replaced at no additional cost to the Owner.

3.2 PREPARATION

A. Clean form surfaces to be in contact with concrete or foreign material prior to installation. Tape, gasket, plug, and/or caulk joints, gaps, and apertures in forms so that the joint will remain watertight and withstand placing pressures without bulging outward or creating surface irregularities.

B. Coat form surfaces in contact with concrete with a form release agent prior to form installation.

C. Keep form coatings off steel reinforcement, items to be embedded, and previously placed concrete.

D. Steel Forms: Apply form release agent to steel forms as soon as they are cleaned to prevent discoloration of concrete from rust.

3.3 ERECTION AND INSTALLATION

A. Forms shall be constructed in accordance with ACI 347 to required dimensions, plumb, straight and mortar tight, and all joints and seams shall be made mortar-tight. Forms shall be substantial, properly braced, and tied together to maintain position and shape and to resist all pressures to which they may be subject. Unless otherwise indicated on the Contract Documents, formwork shall be constructed so that the concrete surfaces will conform to the tolerance limits in ACI 117 and herein specified.

B. Provide means for holding adjacent edges and ends of form panels tight and in accurate alignment to prevent the formation of ridges, fins, offsets, or similar surface defects in the finished concrete. Forms shall be tight and shall prevent the loss of mortar and fines during placing and vibration of concrete.

C. Provide exterior corners in concrete members with chamfers as specified.

D. Provide means for removing forms without injury to the surface of finished concrete.

E. Do not embed any form-tying device or part thereof other than metal in the concrete.

F. Locate large end of taper tie on the "wet" side of the wall.

G. Use only form or form-tying methods that do not cause spalling of the concrete upon form stripping or tie removal.

H. Form surfaces of concrete members except where placement of the concrete against the ground is shown in the drawings or as indicated below. The dimensions of concrete members shown in the drawings apply to formed surfaces, except where otherwise indicated. Add 2 inches of concrete where concrete is placed against trimmed undisturbed ground in lieu of forms. Placement of concrete against the ground shall be limited to footings and other nonexposed concrete and only where the character of the ground is such that it can be trimmed to the required lines and will stand securely without caving or sloughing.

I. Openings shall be of sufficient size to permit final alignment of pipes or other items without deflection or offsets of any kind. Allow space for packing where items pass through the wall to ensure water tightness. Provide openings with continuous keyways and water stops. Provide a slight flare to facilitate grouting and the escape of entrained air during grouting. Provide formed openings with additional reinforcement as shown

in the typical structural details. Reinforcing shall be at least 2 inches clear from the opening surfaces and encased items.

J. Set anchor bolts and other embedded items accurately before placing concrete and hold securely in position until the concrete is placed and set. Check special castings, channels, or other metal parts that are to be embedded in the concrete prior to and again after placing concrete. Check nailing blocks, plugs, and strips necessary for the attachment of trim, finish, and similar work prior to placing concrete.

3.4 PROTECTION

A. During installation, the forms shall not be used as a storage platform nor as a working platform until the forms have been permanently fastened in position.

3.5 PIPES AND WALL CASTINGS CAST IN CONCRETE

A. Install wall spools, wall flanges, and wall anchors before placing concrete. Do not weld, tie, or otherwise connect the wall castings or anchors to the reinforcing steel.

B. Support pipe and fabricated fittings to be encased in concrete on concrete piers or pedestals. Carry concrete supports to firm foundations so that no settlement will occur during construction.

C. Pipes or wall castings located below operating water level shall have water stop ring collars and shall be cast in place. Do not block out such piping and grout after the concrete section is cast unless permitted, authorized or directed by the Engineer. Pipes fitted with thrust rings shall be cast in place.

3.6 REMOVAL OF FORMS

A. Forms shall be removed in accordance with ACI 347 recommendations without damage to concrete and in a manner to ensure complete safety to the structure. Forms, form ties and bracing shall not be removed without specific permission of the Contractor's Registered Professional Engineer.

B. The following table indicates the minimum allowable time after the last cast concrete is placed before forms, shoring, or wall bracing may be removed; during which the air surrounding the concrete is above 50 degrees F.

Table 03 1000-2	
Sides of footings and encasements	24 hours
Walls, vertical sides of beams, girders, columns, and similar members not supporting loads	48 hours
Slabs, beams, and girders	10 days (forms only)

Shoring for slabs, beams, and girders	Until concrete strength reaches 70 percent specified 28-day strength or 7 days minimum
Wall bracing	Until top or roof slab concrete reaches 70 percent specified 28-day strength or 7 days minimum

C. Removal times will be increased if the concrete temperature following placement is permitted to drop below 50 degrees F.

D. Do not remove supports and reshore.

3.7 PATCHING OF TAPERED TIE HOLES

A. Clear tie hole of all loose debris with a taper tie void brush and flush debris from tie hole with air or water.

B. Install elastic vinyl plug from larger tie hole end in accordance with manufacturer's instructions using an insertion tool as recommended by the manufacturer.

C. Coat entire annular surface of the hole with epoxy bonding compound prior to filling with non-shrink, non-metallic patching mortar. Apply epoxy in accordance with manufacturer's instructions.

D. Fill each side of hole with mortar. Apply mortar to the "wet" side of the wall first. Consolidate mortar solidly into the hole.

E. Clear tie hole of all loose debris with a taper tie void brush and flush debris from tie hole with air or water.

F. Install mechanical plug in accordance with manufactures instructions.

G. Coat entire annular surface of the hole with epoxy bonding compound prior to filling with non-shrink, non-metallic patching mortar. Apply epoxy in accordance with manufacturer's instructions.

H. Fill each side of hole with mortar. Apply mortar to the "wet" side of the wall first. Consolidate mortar solidly into the hole.

3.8 CLOSEOUT ACTIVITIES

A. Provide in accordance with Section 01 77 00.

END OF SECTION

SECTION 03 15 00

CONCRETE JOINTS AND ACCESSORIES

1.1 DESCRIPTION

A. This section describes materials, testing, and installation of concrete joints and accessories as specified and as shown on contract drawings.

1.2 REFERENCES

A. ASTM International (ASTM):

1. C920: Specification for Elastomeric Joint Sealants

2. C1193: Guide for Use of Joint Sealants

3. D412: Standard Test Methods or Vulcanized Rubber and Thermoplastic Elastomers – Tension.

4. D994: Standard Specification for Preformed Expansion Joint Filler for Concrete (Bituminous Type)

5. D1259: Standard Test Methods for Nonvolatile Content of Resin Solutions.

6. D1752: Specification for Preformed Sponge Rubber and Cork Expansion Joint Fillers for Concrete Paving and Structural Construction.

7. D2240: Standard Test Method for Rubber Property – Durometer Hardness

1.3 SUBMITTALS

A. Submit following shop drawings in accordance with 01 33 00.

1. Manufacturer's printed data and application instructions for specified materials and locations where materials are to be used.

2. Submit to the Engineer a proposed control joint plan for approval prior to construction

3. Submit layouts for joints.

4. Certification that materials used within the joint system are compatible with each other.

1.4 QUALITY ASSURANCE

A. Comply with requirements in section 01 40 00 and as specified.

B. Do not add, relocate or omit joints without written permission from the Engineer.

C. Reject material exceeding expiration date for use.

D. Clean concrete surfaces to receive expansion joint compound in accordance with the printed instructions of the joint compound manufacturer.

1.5 DELIVERY, STORAGE AND HANDLING

A. Transport, handle and deliver materials to the job site in the manufacturer's sealed bags, unopened containers or banded pallets.

B. Store materials off the ground on a platform or skids and protect with covers from snow, rain and ground splatter.

C. Store expansion joint compounds in a dry location where they cannot freeze.

D. Store plastic products under cover in a dry location, out of direct sunlight.

1.6 MANUFACTURER'S SERVICES

A. Prior to joint preparation for joints receiving sealant materials, require joint manufacturer's technical representative to demonstrate, on site, joint preparation, priming, and sealant materials application for the Contractor's personnel performing joint work.

PART 2 - PRODUCTS

2.1 ELASTOMERIC JOINT SEALANT

A. Federal Specification ASTM C920, Type S, Grade P, single component, cold applied, pourable, polyurethane.

1. Products:

a. Euclid Chemical Corp; Eucolastic 1SL

b. Tremco Incorporated; Vulkem 45SSL

c. Or accepted equivalent product.

2.2 JOINT SEALANT FOR CONCRETE STRUCTURES

A. Joint sealant shall be a multipart, gray, nonstaining, nonsagging, gun grade polyurethane sealant, which cures at ambient temperature to a firm, flexible, resilient, tear-resistant rubber. Sealant shall comply with ASTM C920, Type M, Grade P, Class 25 for horizontal joints and Grade NS, Class 25 for vertical joints and be recommended by the manufacturer for continuous immersion in water. Troweling of

sealants into joints will not be permitted. Sealant shall meet requirements in Table 03 1500-1.

TABLE 03 1500-1	
Characteristic or Parameter	**Technical Requirements**
Pot life	1 to 3 hours
Hardness	35 Shore A, +/- 5
Elongation	650 percent, ASTM D412
Tensile strength	200 psi, ASTM D412
Peel strength on concrete	No adhesion loss at 25 pounds
Temperature service range	40 to 167 degrees F
Immersion in water	Continuous

B. Products:

1. Tremco Incorporated; Vulkem 116+catalyst (for Type M, Grade NS, Class 25)

2. Sika Corporation; Sikaflex-2CNS (for Grade NS, Class 25), Sikaflex-2CSL

3. Or accepted equivalent product.

2.3 EPOXY JOINT SEALANT

A. 100 percent solids per ASTM D1259, two-part epoxy with an instantaneous Shore D hardness of 50 to 65 per ASTM D2240.

1. Metzger-McGuire Co.; MM80 or Edge Pro 80

2. Euclid Chemical Corp.; Euco700

3. Or accepted equivalent product.

2.4 BACKING ROD FOR EXPANSION JOINTS

A. Provide an extruded closed-cell polyethylene foam rod. The rod shall be 1/4-inch larger in diameter than the joint width. Where possible, provide full-length sections for the joint; minimize splices.

2.5 BOND BREAKER TAPE

A. Provide an adhesive-backed glazed butyl or polyethylene tape that will adhere to the premolded joint material or concrete surface. The tape shall be the same width as the joint. The tape shall be compatible with the sealant.

2.6 PREFORMED CONTROL JOINT

A. One-piece, flexible, PVC joint former.

B. One-piece steel strip with preformed groove

C. Provide the preformed control joint material in full-length unspliced pieces.

2.7 PREMOLDED JOINT FILLER FOR PAVEMENTS AND SLABS

A. Joint filler shall be preformed, nonextruded type constructed of closed-cell neoprene conforming to ASTM D1752, Type I

B. Bituminous-type preformed expansion joint filler conforming to ASTM D994.

2.8 STYROFOAM FILLER BLOCK

A. Styrofoam filler blocks for future construction and expansion joints.

1. Products:

a. Dow Chemical Company; Styrofoam SM brand

b. Or accepted equivalent product.

2.9 BOND BREAKER FOR JOINT COMPOUNDS

A. Provide polyethylene tape.

PART 3 - EXECUTION

3.1 JOINTS

A. Make joints only at locations shown on the contract drawings or as permitted by the Engineer. Any addition or relocation of construction joints proposed by the Contractor, must be submitted to the Engineer for written permission.

B. Relocate additional joints where they least impair strength of the member. In general, locate joints within the middle third of spans of slabs, beams and girders. If a beam intersects a girder at the joint, offset the joint a distance equal to twice the width of the member being connected. Locate joints in walls and columns at the underside of floors, slabs, beams or girders and at tops of footing or floor slabs.

C. Cast slabs monolithically without horizontal joints unless specifically indicated on the drawings.

D. Do not use horizontal joints within base slabs, footings, or slabs on grade.

E. Provide joints in concrete fills and toppings at the same location as the joints in the supporting concrete.

F. Construction Joints

1. Allow 48 hours between pours of adjacent slabs.

2. Where joint key ways are shown on contract drawings form keyways by beveled strips or boards placed at right angles to the formed face. Except where otherwise shown on contract drawings or specified, keyways shall be at least 1-1/2 inches in depth over at least 25 percent of the width of the section.

3. After the pour has been completed to the construction joint and the concrete has hardened, thoroughly clean the entire surface of the joint of surface laitance, loose concrete, foreign material, and expose clean aggregate by sandblasting the surface of construction joints before placing the new concrete.

4. In case of emergency, place additional construction joints. (An interval of 45 minutes between two consecutive batches of concrete shall constitute cause for an emergency construction joint.)

G. Control Joints:

1. Submit to the Engineer a proposed control joint plan for approval prior to construction.

2. Form control joints with control joint inserts or sawcuts as shown in Contract Drawings.

3. For sawcutting:

a. Using early entry saws, saw joints in slabs before the formation of uncontrolled cracking (i.e., cracking that occurs at locations other than construction or control joints) and as soon as the concrete has hardened sufficiently to permit cutting without chipping, spalling, or tearing.

b. Fill saw cut to full depth with elastomeric joint sealant for joints not exposed to vehicular traffic. Fill joints to full depth with epoxy joint sealant for joints exposed to vehicular traffic.

4. Unless noted otherwise on the Contract Drawings, total reduction in concrete member thickness shall be at least 1/4 the member thickness.

3.2 INSTALLATION OF JOINT SEALANTS

A. Immediately before installing the joint sealant, clean the joint cavity by sandblasting or power wire brushing. Install bond breaker tape per manufacturer's instructions.

B. Apply masking tape along the edges of the exposed surface of the exposed joints.

C. Application criteria for the sealant materials, such as temperature and moisture requirements and primer cure time, shall be in accordance with the recommendations of the sealant manufacturer.

D. After the joints have been prepared as described above, apply the joint sealant. Apply the primer, if required, and joint sealant only with the equipment and methods recommended by the joint sealant manufacturer.

E. Trowel the joints smooth with a tuck pointing tool wiped with a solvent recommended by the sealant manufacturer.

F. After the sealant has been applied, remove the masking tape and any sealant spillage.

G. Sealants used in water retaining structures shall achieve final cure at least seven days before the structure is filled with water.

3.3 CLOSEOUT ACTIVITIES

A. Provide in accordance with Section 01 77 00.

END OF SECTION

SECTION 03 15 20

ANCHORAGE IN CONCRETE AND MASONRY

PART 1 - GENERAL

1.01 DESCRIPTION:

A. Provide specifies anchor bolts complete with washers and nuts as indicated and in compliance with Contract Documents. Unless otherwise specified, anchor bolts shall be hot-dip galvanized or Type 304 or 316 stainless steel.

1.02 SPECIAL INSPECTION:

A. Special inspection of anchor bolts shall be performed by the Special Inspector and in accordance with the IBC and the Statement of Special Inspections.

1.03 REFERENCES:

A. American Concrete Institute (ACI):

1. 318: Building Code Requirements for Structural Concrete, and Commentary

B. ASTM International (ASTM):

1. A36: Structural Steel

2. A108: Standard Specification for Steel Bar, Carbon and Alloy, Cold-Finished

3. A123/A123M: Standard Specification for Zinc (Hot Dip Galvanized) Coatings on Iron and Steel Products

4. A193/A193M: Standard Specification for Alloy-Steel and Stainless-Steel Bolting Materials for High-Temperature Service

5. A194: Standard Specification for Carbon and Alloy Steel Nuts for Bolts for High-Pressure or High-Temperature Service, or Both

6. A276: Standard Specification for Stainless Steel Bars and Shapes

7. A320: Alloy Steel Bolting Materials for Low-Temperature Service

8. A354: Standard Specification for Quenched and Tempered Alloy Steel Bolts, Studs, and Other Externally Threaded Fasteners

9. A449: Quenched and Tempered Steel Bolts and Studs

10. A490: Standard Specification for Structural Bolts, Alloy Steel, Heat Treated, 150 ksi Minimum Tensile Strength

11. A493: Standard Specification for Stainless Steel Wire and Wire Rods for Cold Heading and Cold Forging

12. A563: Standard Specification for Carbon and Alloy Steel Nuts

13. A572: Standard Specification for High Strength Low Alloy Columbium Vanadium Structural Steel

14. F593: Stainless Steel Bolts, Hex Cap Screws and Studs

15. F594: Stainless Steel Nuts

16. F844: Standard Specification for Washers, Steel, Plain (Flat), Unhardened for General Use

17. F1554: Anchor Bolts, Steel, 36, 55, 105-ksi Yield Strength

18. F3125: Standard Specification for High Strength Structural Bolts and Assemblies, Steel and Alloy Steel, Heat Treated, 120 ksi and 150 ksi Minimum Tensile Strength

C. International Building Code (IBC):

1. International Building Code, 2018 Edition

1.04 SUBMITTALS:

A. Submit the following shop drawings in accordance with Section 01 33 00.

B. A copy of this specification section, with addenda updates, with each paragraph check marked to show specification compliance or marked to show deviations.

1. Data indicating load capacities.

2. Chemical resistance.

3. Temperature limitations.

4. Installation instructions.

5. Manufacturer's data and catalogue numbers.

C. All post installed anchors, adhesive and expansion type anchors shall be listed with at least one of the following agencies, ICC & ICC (ES). Submit ICC evaluation reports for adhesive and expansion type anchors as specified in paragraph 3.02 of this specification section.

D. Design calculation in accordance with paragraph 2.04 of this specification section.

1.05 SPARE PARTS:

A. Pack spare parts to protect them during storage. Tag spare parts and containers to clearly identify them in accordance with Owner's parts numbering system.

1.06 QUALITY ASSURANCE:

A. Comply with the requirements specified in Section 01 40 00.

1.07 DELIVERY, STORAGE, AND HANDLING:

A. Contractor shall arrange deliveries of materials and equipment in accordance with construction Progress Schedule, coordinate to avoid conflict with Work and conditions at site.

B. Provide equipment and personnel to handle materials and equipment by methods recommended by manufacturer to prevent soiling or damage to materials or equipment, or their packaging.

C. Deliver, store, and handle products using means and methods that will prevent damage, deterioration, and loss, including theft and vandalism. Comply with manufacturer's written instructions.

PART 2 - PRODUCTS

2.01 GENERAL:

A. Anchor bolt holes in equipment support frames shall not exceed the bolt diameters by more than 25 percent, up to a limiting maximum oversizing of 1/4 inch. Minimum anchor bolt diameter shall be 1/2 inch. Anchor bolts shall be furnished with leveling nuts, the faces of which shall be tightened against flat surfaces as shown to not less than 10 percent of the bolt's safe tensile stress.

B. Tapered washers shall be provided where mating surface is not square with the nut.

C. Expansion, wedge or adhesive anchors set in holes drilled in the concrete after the concrete is placed will not be permitted in substitution for anchor bolts except where otherwise specified. Upset threads shall not be acceptable.

2.02 MATERIALS:

A. Anchor bolt materials shall be as specified in Table 03 15 20-1 unless otherwise specified on the contract drawings.

2.03 ANTI-SEIZE COMPOUND:

A. All stainless-steel embedded bolts, expansion anchors, and adhesive anchors shall be assembled with a stainless steel anti-seize compound such as molycote.

2.04 DESIGN:

A. Anchor bolts for equipment frames and foundations shall be designed in accordance with the IBC. The contractor designed anchor bolts are differed approval, and the "stamped" calculations and drawing shall be submitted to the engineer of record for review of general complaisance with design intent. Calculations and shop drawings shall be submitted with the equipment submittal in accordance with the Section 01 33 00 for all anchorage details. All calculations must be made and signed by a civil or structural engineer currently registered in the State of New Mexico.

B. All anchor bolts resisting seismic forces shall be design based on cracked concrete requirement in ACI 318.

Table 03 15 20-1
Anchor Bolt Materials

Material	Specification
Stainless Steel Anchor Bolts	ASTM A193, Grade B8M Class 1, AISI 316 or ASTM A320, Grade B8M Class 1, AISI 316
Stainless Steel Threaded Rods at Adhesive Anchors	ASTM F593 CW1 (1/4 inches to 5/8 inches Rod) ASTM F593 CW2 (3/4 inches to 1 1/2 inches Rod)
Stainless Steel Nuts and Washers	ASTM A194 Grade 8M, SS316 Nuts with Type 316 SS Washers (ASTM F594 Group 2 Type 316 SS Nuts at Adhesive Anchors)
Carbon Steel Anchor Bolts	ASTM F1554 (Grade 36) – Hot Dip Galvanized unless noted otherwise
High-Strength Carbon Steel Anchor Bolts	ASTM F1554 (Grade 55 Weldable per Supplementary Requirement S1) – Hot Dip Galvanized unless noted otherwise
Carbon Steel Nuts and Washers	ASTM A563 and ASTM F844
Concrete Expansion Anchors	Stainless Steel HILTI "KWIK BOLT TZ"; SIMPSON STRONG-TIE STRONG BOLT 2

Table 03 15 20-1 Anchor Bolt Materials	
Material	**Specification**
Concrete Adhesive Anchoring System	HILTI HIT-HY 200; SIMPSON STRONG-TIE SET-XP
Masonry Expansion Anchors	Stainless Steel HILTI "KWIK BOLT 3"
Masonry Adhesive Anchoring System	HILTI "HIT-HY 270 MAX"
Stainless Steel Headed Anchor Studs	ASTM A276 or A493; Nelson Stud Welding, Inc.
Carbon Steel Headed Anchor Studs	ASTM A108; Nelson Stud Welding, Inc.

PART 3 - EXECUTION

3.01 GENERAL:

A. Fieldwork, including cutting and threading, shall not be permitted on galvanized items. Dissimilar metals shall be protected from galvanic corrosion by means of pressure tapes, coatings or isolators. Grouting of anchor bolts with nonshrink or epoxy grouts, where specified, shall be in accordance with Section 03 60 00. All stainless-steel anchor bolts and fasteners shall be assembled with stainless steel anti-seize compound.

3.02 INSTALLATION

A. Cast-In-Place Anchor Bolts:

1. Anchor bolts to be embedded in concrete shall be placed accurately and held in correct position while the concrete is placed. Only where specifically shown on the contract plans recesses or blockouts shall be formed in the concrete and the metalwork shall be grouted in place in accordance with Section 03 60 00 after strength is attained. The surfaces of metalwork in contact with concrete shall be thoroughly cleaned.

2. After anchor bolts have been embedded, their threads shall be protected by grease and the nuts run on.

3. For grouting of anchor bolts, use non-shrink, non-metallic grout as specified in Section 03 60 00.

B. Adhesive Anchors:

1. Use of adhesive or capsule anchors shall be as shown on the contract drawings and shall be subject to the following conditions:

   a. Use shall be limited to locations where exposure, on an intermittent or continuous basis, to acid concentrations higher than 10 percent, to chlorine gas, or to machine or diesel oils, is extremely unlikely.

   b. Use shall be limited to applications where exposure to fire or exposure to concrete or rod temperature above 120 degrees F is extremely unlikely. Overhead applications (such as pipe supports), because of the above concerns, shall be disallowed.

   c. Anchor diameter and grade of steel shall be per contract documents or per equipment supplier specifications. Anchor shall be threaded or deformed full length of embedment and shall be free of rust, scale, grease, and oils.

   d. Embedment depth shall be as specified on the drawings. Adhesive capsules of different diameters may be used to obtain proper volume for the embedment, but no more than two capsules per anchor may be used. When installing different diameter capsules in the same hole, the larger diameter capsule shall be installed first. Any extension or protrusion of the capsule from the hole is prohibited.

   e. All installation recommendations by the anchor system manufacturer shall be followed carefully, including, but not limited to, maximum hole diameter, minimum embedment, and minimum edge distance.

   f. Holes shall have rough surfaces, such as can be achieved using a rotary percussion drill.

   g. Holes shall be blown clean with compressed air and be free of dust or standing water prior to installation.

   h. Anchor shall be left undisturbed and unloaded for full adhesive curing period.

   i. Concrete temperature (not air temperature) shall be compatible with curing requirements of adhesives per adhesive manufacturer. Anchors shall not be placed in concrete below 25 degrees F.

2. The Contractor shall supply the Engineer with the current ICC evaluation report from the ICC Evaluation Services for the particular brand of adhesive anchors to be used.

3.03 EXPANSION ANCHORS:

A. Use of expansion anchors shall be as shown on the contract drawings and shall be subject to Conditions c, e, f, g, and h specified in paragraph 3.02-B.1 of this specification section.

3.04 CLOSEOUT ACTIVITIES:

A. Provide in accordance with Section 01 77 00.

END OF SECTION

SECTION 03 21 00

REINFORCEMENT BARS

PART 1 - GENERAL

1.1 DESCRIPTION

A. Provide concrete reinforcement as indicated and in compliance with Contract Documents:

1. Section Includes:

a. Reinforcement bars.

b. Reinforcement accessories.

1.2 REFERENCES

A. ASTM International (ASTM):

1. A82: Standard Specification for Steel Wire, Plain, for Concrete Reinforcement.

2. A496: Standard Specification for Steel Wire, Deformed, for Concrete Reinforcement.

3. A615: Standard Specification for Deformed and Plain Billet-Steel Bars for Concrete Reinforcement.

B. American Concrete Institute (ACI):

1. 301: Standard Specification for Structural Concrete.

2. 315: Details and Detailing of Concrete Reinforcement.

3. 318: Building Code Requirements for Structural Concrete.

4. SP-66: ACI Detailing Manual.

C. Concrete Reinforcing Steel Institute (CRSI):

1. Manual of Standard Practice.

2. Placing Reinforcing Bars.

D. Where reference is made to one of the above standards, the version in effect at the time of bid opening shall apply.

1.3 SUBMITTALS

A. Shop Drawings:

1. Submit bar lists and placing drawings for all reinforced concrete and masonry structures in accordance with Section 01 33 00.

2. Detail reinforcement in conformance with ACI SP-66.

3. Clearly indicate bar sizes, spacings, locations and quantities of reinforcement steel, bending schedules, and supporting and spacing devices. Show joints, with applicable joint reinforcement.

4. Coordinate bar splicing and placement with Contractor's concrete placing schedule and joint locations. Do not add or delete joints without permission from the Engineer.

5. Show wall reinforcement in elevation.

6. Show slab reinforcement in plan view.

7. Show location and size of all penetrations greater than 8-inches in diameter or least dimension of the opening with the corresponding added reinforcement around the penetrations.

8. Clearly show marking for each reinforcement item.

9. Indicate locations of reinforcement bar cut-offs, splices and development lengths.

B. Submit certified copies of mill test reports of reinforcement analysis dated within the last twelve months for each shipment of reinforcement with specific lots in shipments identified.

C. Chemical composition of reinforcement steel: Ladle analysis indicating percentage of carbon, phosphorous, manganese and sulfur present in steel.

D. Where mechanical couplers are required or permitted to be used to splice reinforcement steel, submit Manufacturer's literature that contains instructions and recommendations for installation for each type of coupler used; certified test reports that verify the load capacity of each type and size of coupler used; and Shop Drawings that show the location of each coupler with details of how they are to be installed in the formwork.

1.4 QUALITY ASSURANCE

A. Comply with requirements in Section 01 40 00 and as specified.

B. Do not fabricate reinforcement until shop and placement drawings have been reviewed and accepted by the Engineer.

C. Perform concrete reinforcement work in accordance with CRSI Manual of Practice, ACI 301, ACI SP-66, and ACI 318.

D. An independent testing agency will be retained by Contractor to inspect each mechanical coupler and verify each component is installed in accordance with Manufacturer's instructions and ICC Evaluation Services Report or equivalent code agency report.

1.5 INSPECTION AND TESTING

A. In no case shall any reinforcement steel be covered with concrete until the installation of the reinforcement has been observed by the Engineer and the Engineer's authorization to proceed with the concreting has been obtained. The Engineer shall be given 48 hours minimum prior notice of the readiness of placed reinforcement for observation. The forms shall be kept open until the Engineer has finished observations of the reinforcement steel.

1.6 DELIVERY STORAGE AND HANDLING

A. Keep reinforcement steel free from mill scale, rust, dirt, grease or other foreign matter.

B. Ship and store reinforcement steel with bars of the same size and shape fastened in bundles with durable tags, marked in a legible manner with waterproof markings showing the same "mark" designations as those shown on the submitted placing drawings.

C. Store reinforcement steel off the ground, protected from moisture and kept free from dirt, oil or other injurious contaminants.

PART 2 - PRODUCTS

2.1 REINFORCEMENT STEEL

A. Reinforcement Steel: ASTM A615, 60 ksi yield grade; deformed billet steel bars, unfinished.

2.2 ACCESSORY MATERIALS

A. Tie Wire: Minimum 16 gage annealed type.

B. Chairs, Bolsters, Bar Supports, and Spacers: sized and shaped for strength and support of reinforcement during concrete placement.

C. Special Chairs, Bolsters, Bar Supports, and Spacers Adjacent to Weather Exposed Concrete Surfaces: plastic coated steel type; size and shape.

D. Provide 3-inch by 3-inch plain precast concrete blocks, precast concrete doweled blocks or concrete brick for support of bottom reinforcement in foundation mats, base slabs, footings, and slabs on grade. Provide block thickness to produce concrete cover of reinforcement as indicated.

E. Mechanical Couplers

1. Use of mechanical couplers is subject to the approval of the Engineer.

2. Reinforcement Tension Bar Splicers:

a. Manufacturers: Cadweld or Lenton rebar splicers by Erico Products, Inc.

b. Develop minimum 125 percent of yield capacity of bars spliced in tension when tested as assembly in accordance with ASTM A370 and A615.

F. Provide epoxy for grouting reinforcement bars specifically formulated for such application for the moisture condition, application temperature, and orientation of the hole to be filled.

1. Where anchor manufacturer is not indicated, subject to compliance with requirements and acceptance by the Engineer, provide the following:

a. Hilti HAS threaded rods with HIT-HY 200 Safe Set System using Hilti Hollow Drill Bit and VC 150/300 vacuum System for anchor and rebar anchorage to concrete, ICC ESR-3187.

2.3 FABRICATION

A. Fabricate concrete reinforcement in accordance with CRSI Manual of Standard Practice, ACI SP-66, and ACI 318.

B. Locate reinforcement splices not indicated on Drawings, at point of minimum stress. Review location of splices with Engineer.

C. Cold bend bars. Do not straighten or rebend bars.

D. Do not heat reinforcement steel to bend or straighten.

E. Bend bars around a revolving collar having a diameter of not less than that recommended by the ACI 318.

F. Cut bar ends that are to be butt spliced or threaded by saw cutting. Terminate such ends in flat surfaces within 1-1/2 degrees of a right angle to the axis of the bar.

PART 3 - EXECUTION

3.1 INSTALLATION

A. Place, support and secure reinforcement against displacement. Do not deviate from required position. Place reinforcement a minimum of 2 inches clear of any metal pipe or fittings.

B. Position dowels accurately. Rigidly support, align and securely tie dowels normal to the concrete surface before concrete placement. Setting dowels into wet concrete is prohibited.

C. Position wall dowels projecting from base slabs on grade with templates or guides held in place above the concrete placement line. Position the templates to obtain the required clearance between the dowels and the face of the walls.

D. Bars additional to those indicated that may be found necessary or desirable by the Contractor for the purpose of securing reinforcement in position shall be provided by the Contractor at no additional cost to the Owner.

E. Do not extend continuous reinforcement or other fixed metal items through expansion joints. Provide 2 inches clearance from each face of expansion joint.

F. Provide additional reinforcement bars to support top reinforcement in slabs. Do not shift reinforcement bars from positions in upper layers to positions in lower layers as a substitute for additional support bars.

G. Support reinforcement steel in accordance with CRSI “Placing Reinforcement Bars” with maximum spacing of 4 feet-0 inches.

H. Tie reinforcement steel at intersections in accordance with CRSI “Placing Reinforcement Bars”:

1. Maximum tie spacing for footings, walls and columns: every third intersection or 3 feet-0 inches.

2. Maximum spacing for slabs and other work: every fourth intersection or 3 feet-0 inches.

3. Tie a minimum of 25 percent of all intersecting bars in foundation mats, base slabs, footings, and slabs on grade.

4. Secure all dowels in place before placing concrete.

5. Tie wires shall be bent away from the forms and from finished concrete surfaces in order to provide the required concrete coverage.

I. Locate reinforcement to avoid interference with items drilled in later, such as concrete anchors.

J. Mechanical coupler systems may be substituted for dowels at Contractor's option when permitted by Engineer.

K. Securely support and tie reinforcement steel to prevent movement during concrete placement.

L. Unless otherwise shown on the Drawings or permitted by the Engineer, do not bend reinforcement bars that project from in-place concrete.

M. Do not weld reinforcement steel bars (including tack welded) either during fabrication or erection unless specifically shown on the Drawings or specified herein, or unless prior written permission has been obtained from the Engineer. Immediately remove bars that have been welded, including tack welds, without such permission from the work. Comply with AWS D1.4 when welding of reinforcement is called for.

N. Reinforcement steel interfering with the location of other reinforcement steel, conduits or embedded items may be moved within the specified tolerances or one bar diameter, whichever is greater. Make greater displacement of bars to avoid interference only with the permission of the Engineer. Do not cut reinforcement to install inserts, conduits, mechanical openings or other items without the prior permission from the Engineer.

O. Reinforcement shall be clean and free from loose mill scale, dirt, grease, oil, form release agent, dried concrete or any material reducing bond with concrete.

P. Setting bars and welded wire reinforcement on layers of fresh concrete as the work progresses or adjusting reinforcement during the placement of concrete is prohibited.

Q. Provide and place safety caps on all exposed ends of vertical reinforcement that pose a danger to injury or life safety.

3.2 CONCRETE COVER OVER REINFORCEMENT BARS

A. Conform to ACI 318 for concrete cover over reinforcement.

3.3 REINFORCEMENT AROUND OPENINGS AND PENETRATIONS

A. Accommodate placement of formed openings and penetrations.

B. Unless specific additional reinforcement around openings and penetrations is shown on the Drawings, provide additional reinforcement steel on each side of opening or penetration equivalent to one half of the cross-sectional area of the reinforcement steel interrupted by an opening or penetration. The bars shall have sufficient length to be fully developed at each end beyond the opening or penetration.

C. Unless shown on drawings, provide (1)-#5 by 4 feet-0 inches additional diagonal bar around openings or penetrations on each side of openings or penetrations in each layer of reinforcement.

3.4 SPLICING OF REINFORCEMENT

A. Splices may be used to provide continuity due to bar length limitations. Minimum length of bars spliced for this reason is 30 feet. Do not splice reinforcement that is detailed to be continuous in the Drawings.

B. Stagger bar splices.

C. Provide tension lap splices at all laps in compliance with ACI 318. Use Class B splices at all locations, unless otherwise noted.

D. Make reinforcement continuous through construction joints.

E. Reinforcement may be spliced at construction joints provided that entire lap is placed within only one concrete placement.

3.5 ACCESSORIES

A. Provide accessories such as chairs, chair bars and the like in sufficient quantities and strength to adequately support the reinforcement and prevent its displacement during the erection of the reinforcement and the placement of concrete.

B. Use precast concrete blocks where the reinforcement steel is to be supported over soil.

C. Provide stainless steel bar supports or steel chairs with plastic tips where the chairs are set on forms for a concrete surface that will be exposed to weather, high humidity or liquid unless otherwise noted on contract documents.

D. Do not use metal chairs, ferrous clips, nails, etc. that extend to the surfaces of the concrete. Do not use stones, brick or wood block supports.

E. Do not use alternate methods of supporting top steel in slabs, such as steel channels supported on the bottom steel or vertical reinforcement steel fastened to the bottom and top mats unless permitted by the Engineer.

F. Mechanical Couplers:

1. Couplers that are located at a joint face can be a type that can be set either flush or recessed from the face as indicated.

2. Seal couplers during concrete placement to completely eliminate concrete or cement paste from entering.

3. Recess couplers intended for future connections a minimum of 1/2 inch from the concrete surface. After the concrete is placed, plug the coupler with plastic plugs that have an O-ring seal and the recess filled with sealant to prevent any contact with water or other corrosive materials.

4. Unless indicated otherwise, provide mechanical coupler spacing and size to match the spacing and size of the reinforcement indicated for the adjacent section.

3.6 FIELD QUALITY CONTROL

A. Remove reinforcement with kinks or bends not shown on shop or placement drawings. Remove such reinforcement from job site and replace with new fabricated steel. Do not field bend of reinforcement unless reinforcement is indicated or specified to be field bent.

B. Protect reinforcement from rusting, deforming, bending, kinking and other injury. Clean in-place reinforcement that has rusted or been splattered with concrete using sand or water blasting prior to incorporation into the Work.

3.7 CONTRACT CLOSEOUT

A. Provide in accordance with Section 01 77 00.

END OF SECTION

SECTION 03 30 00

CAST-IN-PLACE CONCRETE

PART 1 - GENERAL

1.01 DESCRIPTION:

A. Provide cast-in-place concrete as indicated and in compliance with Contract Documents.

1.02 REFERENCES:

A. American Concrete Institute (ACI):

1. 211.1: Standard Practice for Selecting Proportions for Normal, Heavyweight, and Mass Concrete
2. 214R: Recommended Practice for Evaluation of Strength Test Results of Concrete
3. 301: Standard Specifications for Structural Concrete
4. 304R: Guide for Measuring, Mixing, Transporting and Placing Concrete
5. 304.2R: Placing Concrete by Pumping Methods
6. 305R: Hot Weather Concreting
7. 306R: Cold Weather Concreting
8. 308: Standard Practice for Curing Concrete
9. 309R: Guide for Consolidation of Concrete
10. 311.4R: Guide for Concrete Inspection
11. 318: Building Code Requirements for Structural Concrete

B. ASTM International (ASTM):

1. A123: Standard Specification for Zinc (Hot-Dip Galvanized) Coatings on Iron and Steel Products
2. A153: Standard Specification for Zinc Coating (Hot-Dip) on Iron and Steel Hardware
3. C31: Standard Practice for Making and Curing Concrete Test Specimens in the Field

4. C33: Standard Specification for Concrete Aggregates

5. C39: Standard Test Method for Compressive Strength of Cylindrical Concrete Specimens

6. C40: Standard Test Method for Organic Impurities in Fine Aggregates for Concrete

7. C42: Standard Test Method for Obtaining and Testing Drilled Cores and Sawed Beams of Concrete

8. C87: Standard Test Method for Effect of Organic Impurities in Fine Aggregate on Strength of Mortar

9. C88: Standard Test Method for Soundness of Aggregates by Use of Sodium Sulfate or Magnesium Sulfate

10. C94: Standard Specification for Ready-Mixed Concrete

11. C109: Standard Test Method for Compressive Strength of Hydraulic Cement Mortars (Using 2-in or [50-mm] Cube Specimens)

12. C123: Standard Test Method for Lightweight Particles in Aggregate

13. C136: Standard Test Method for Sieve Analysis of Fine and Coarse Aggregates

14. C138: Standard Test Method for Unit Weight, Yield, and Air Content (Gravimetric) of Concrete

15. C143: Standard Test Method for Slump of Hydraulic Cement Concrete

16. C150: Standard Specification for Portland Cement

17. C157: Standard Test Method for Length Change of Hardened Hydraulic Cement, Mortar and Concrete

18. C171: Standard Specification for Sheet Materials for Curing Concrete

19. C172: Standard Practice for Sampling Freshly Mixed Concrete

20. C192: Standard Practice for Making and Curing Concrete Test Specimens in the Laboratory

21. C231: Standard Test Method for Air Content of Freshly Mixed Concrete by the Pressure Method

22. C260: Standard Specification for Air-Entraining Admixtures for Concrete

23. C289: Standard Test Method for Potential Alkali-Silica Reactivity of Aggregates (Chemical Method)

24. C295: Standard Guide for Petrographic Examination of Aggregates for Concrete

25. C309: Standard Specification for Liquid Membrane-Forming Compounds for Curing Concrete

26. C311: Standard Test Methods for Sampling and Testing Fly Ash or Natural Pozzolans for Use as a Mineral Admixture in Portland Cement Concrete

27. C494: Standard Specification for Chemical Admixtures for Concrete

28. C595: Standard Specification for Blended Hydraulic Cements

29. C618: Standard Specification for Coal Fly Ash and Raw or Calcined Natural Pozzolan for Use as a Mineral Admixture in Portland Cement Concrete

30. C881: Standard Test Method for Epoxy Resin Base Bonding Systems for Concrete

31. C882: Standard Test Method for Bond Strength of Epoxy Resin Systems Used with Concrete by Slant Shear

32. C989: Standard Specification for Ground Granulated Blast-Furnace Slag for Use in Concrete and Mortars

33. C1017: Standard Specification for Chemical Admixtures for Use in Producing Flowing Concrete

34. C1064: Standard Test Method for Temperature of Freshly Mixed Portland Cement Concrete

35. C1107: Standard Specification for Packaged Dry, Hydraulic-Cement Grout (Nonshrink)

36. C1116: Standard Specification for Fiber Reinforced Concrete

37. C1240: Standard Specification for Silica Fume for Use as a Mineral Admixture in Hydraulic-Cement Concrete, Mortar, and Grout

38. D75: Standard Practice for Sampling Aggregates

39. E154: Test Methods for Water Vapor Retarders Used in Contact with Earth Under Concrete Slabs, on Walls, or as Ground Cover

40. E1745: Standard Specification for Water Vapor Retarders Used in Contact with Soil or Granular Fill under Concrete Slabs

41. E329: Standard Specification for Agencies Engaged in the Testing and/or Inspection of Materials used in Construction

C. American Association of State Highway and Transportation Officials (AASHTO):

1. M182: Standard Specification for Burlap Cloth Made from Jute or Kenaf and Cotton Mats

1.03 SUBMITTALS:

A. Submit the following shop drawings in accordance with Section 01 33 00.

B. Product Data:

1. Manufacturer's specifications and instructions including Material safety Data Sheets (MSDS) for admixtures and curing materials. Manufacturer’s certification of compatibility of all admixtures.

G. Shop Drawings:

1. Provide certificate that cement used complies with ASTM C150 and these specifications.

2. Provide certificates that aggregates comply with ASTM C33 and contain less than 1 percent asbestos by weight or volume. Submit gradation analysis with concrete mix designs.

3. Provide certificate of compliance with these specifications from the manufacturer of the concrete admixtures.

4. For each formulation of concrete proposed, provide concrete mix designs and laboratory 7-day and 28-day compressive tests, or submit test results of 7- and 28-day compressive tests of the mix where the same mix has been used on two previous projects in the past twelve months.

5. For each formulation of concrete proposed, prepare mix designs in accordance with ACI 318, Chapters 4 and 5, except as modified herein. Submit mix design for review by the Engineer at least 15 days before placing of any concrete.

6. Proposed special procedures for protection of concrete under wet weather placement conditions.

7. Proposed special procedures for protection and curing of concrete under hot and cold weather conditions.

H. Test and Evaluation Reports

1. Provide results of drying shrinkage tests from trial concrete mixes by the Contractor's testing laboratory firm.

I. Manufacturers' Instructions

1. Provide epoxy bonding compound manufacturer's specific instructions for use. Provide manufacturer's data sheets as to suitability of product to meet job requirements with regard to surface, pot life, set time, vertical or horizontal application, and forming restrictions.

J. Field Quality Control Submittals

1. Provide delivery tickets for ready-mix concrete or weighmasters certificate per ASTM C94, including weights of cement and each size aggregate and amount of water added at the plant and record of pours. Record the amount of water added on the job on the delivery ticket. Water added at the plant shall account for moisture in both coarse and fine aggregate.

1.04 SHRINKAGE TESTS:

A. The testing laboratory shall perform drying shrinkage tests for the trial batches as specified herein.

B. Fabricate, cure, dry, and measure specimens in accordance with ASTM C157 modified as follows:

1. Remove specimens from molds at an age of 23 hours +/- 1 hour after trial batching, place immediately in water at 70 degrees F +/- 3 degrees F for at least 30 minutes, measure within 30 minutes thereafter to determine original length, and then submerge in saturated lime water at 73 degrees F +/- 3 degrees F. At age seven days, make measurement to determine expansion, expressed as a percentage of original length. This length at age seven days shall be the base length for drying shrinkage calculations (zero days' drying age).

2. Then, store specimens immediately in a humidity-controlled room maintained at 73 degrees F +/- 3 degrees F and 50 percent +/- 4 percent relative humidity for the remainder of the test. Make and report measurements to determine shrinkage expressed as percentage of base length separately for 7, 14, 21, and 28 days of drying after 7 days of moist curing.

C. Compute the drying shrinkage deformation of each specimen as the difference between the base length (at zero days' drying age) and the length after drying at each test age. Compute the average drying shrinkage deformation of the specimens to the nearest 0.0001 inch at each test age. If the drying shrinkage of any specimen departs from the average of that test age by more than 0.0004 inch, disregard the results obtained from that specimen. Report results of the shrinkage test to the nearest 0.001 percent of shrinkage. Take compression test specimens in each case from the same concrete used for preparing drying shrinkage specimens. These tests shall be considered a part of the normal compression tests for the project.

D. The maximum concrete shrinkage for specimens cast in the laboratory from the trial batch, as measured at 21-day drying age or at 28-day drying age, shall be 0.036 or 0.042 percent,

respectively. Use a mix design for construction that has first met the trial batch shrinkage requirements. Shrinkage limitations apply only to Class A concrete**.**

E. If the trial batch specimens do not meet the shrinkage requirements, revise the mix design and/or materials and retest.

1.05 QUALITY ASSURANCE:

A. Provide in accordance with Section 01 40 00.

E. Unless otherwise indicated, materials, workmanship, and practices shall conform to the following standards:

1. ACI 301, "Structural Concrete for Buildings."

2. ACI 318, "Building Code Requirements for Reinforced Concrete."

F. Where provisions of pertinent codes and standards conflict with this specification, the more stringent provisions govern.

G. Concrete not meeting the minimum specified 28-day design strength shall be cause for rejection and removal from the work.

H. Perform concrete work in conformance with ACI 301 unless otherwise specified.

I. Do not use admixtures, including calcium chloride, which will cause accelerated setting of cement in concrete.

J. Do not place concrete until design mix, material tests and trial concrete batch mix compression test results are accepted by the Engineer.

K. Employ an independent testing laboratory, acceptable to the Engineer, to develop concrete mix designs and testing. Concrete testing shall be performed by an ACI Concrete Field Technician, Grade I or equivalent.

L. The Contractor shall employ an independent testing laboratory to test conformity of materials to specifications. Concrete testing shall be performed by an ACI Concrete Field Technician, Grade I or equivalent. Allow free access to obtain test samples.

M. Methods of Sampling and Testing:

1. Fresh Concrete Sampling: ASTM C172

2. Specimen Preparation: ASTM C31

3. Compressive Strength: ASTM C39

4. Air Content: ASTM C231

5. Slump: ASTM C143

6. Temperature: ASTM C1064

7. Unit Weight: ASTM C138

8. Obtaining Drilled Cores: ASTM C42

9. Drying Shrinkage: ASTM C157

N. Acceptance of Structure: Acceptance of completed concrete work requires conformance with dimensional tolerances, appearance and strength as indicated or specified.

O. Hot weather concrete to conform to ACI 305R and as specified herein.

P. Cold weather concrete to conform to ACI 306R and as specified herein.

Q. Reject concrete delivered to job site that exceeds the time limit or temperature limitations specified.

R. Do not place concrete in water or on frozen or uncompacted ground.

S. Workability

1. Concrete shall be of such consistency and composition that it can be worked readily into the forms and around the reinforcement without excessive vibrating and without permitting the materials to segregate or free water to collect on the surface.

3. Adjust the proportions to secure a plastic, cohesive mixture, and one that is within the specified slump range.

4. To avoid unnecessary changes in consistency, obtain the aggregate from a source with uniform quality, moisture content, and grading. Handle materials to minimize variations in moisture content that would interfere with production of concrete of the established degree of uniformity and slump.

1.06 DELIVERY, STORAGE, AND HANDLING:

A. Deliver concrete to discharge locations in watertight agitator or mixer trucks without altering the specified properties of water-cement ratio, slump, air entrainment, temperature and homogeneity.

B. Reject concrete not conforming to specification, unsuitable for placement, exceeding the time or temperature limitations or not having a complete delivery batch ticket.

1.07 SITE CONDITIONS:

A. Do not place concrete until conditions and facilities for making and curing control test specimens are in compliance with ASTM C 31 and as specified herein.

PART 2 - PRODUCTS

2.01 MATERIALS:

B. Cement:

1. Portland Cement, ASTM C150, Type II or Type I.

2. Use only one brand of cement in any individual structure. Use no cement that has become damaged, partially set, lumpy, or caked. Reject the entire contents of the sack or container that contains such cement. Use no salvaged or reclaimed cement.

3. Maximum tricalcium aluminate shall not exceed 8 percent. The maximum percent alkalies shall not exceed 0.6 percent.

C. Fly Ash:

1. Provide fly ash conforming to the following requirements:

a. Class F fly ash conforming to ASTM C 618 for chemical and physical properties.

b. Supplemental requirements in percent:

(1) Maximum carbon content: 3 percent

(2) Maximum sulfur trioxide (SO3) content: 4 percent

(3) Maximum loss on ignition: 3 percent

(4) Maximum water requirement (as a percent of control): 100 percent

(5) Fineness, maximum retained on No. 325 sieve: 25 percent

D. Fine Aggregates:

1. Clean, sharp, natural sand conforming to requirements of ASTM C33 with a fineness modulus between 2.50 and 3.0.

E. Coarse Aggregate:

1. Well graded crushed stone, natural rock conforming to requirements of ASTM C33**,** and shall contain less than 1 percent asbestos by weight or volume.

2. Limit deleterious substances in accordance with ASTM C33, Table 3, Severe Weathering Regions, limit clay lumps not to exceed 1.0 percent by weight, and limit loss when tested for soundness using magnesium sulfate to 12 percent.

F. Water and Ice:

1. Use water and ice free from injurious amounts of oil, acid, alkali, salt, organic matter or other deleterious substances and conforms to requirements of ASTM C94.

2. Water shall not contain more than 500 mg/L of chlorides nor more than 500 mg/L of sulfate.

4. Heat or cool water to obtain concrete temperatures specified, and in conformance with ACI 305R and ACI 306R.

G. Color Additive for Exterior Electrical Duct Encasement:

1. For exterior electrical duct concrete encasements, use a color additive for identification purposes.

H. Concrete Admixtures:

1. Maintain compressive strength and maximum water-cement ratios specified in Table 03 30 00-1 when using admixtures. Include admixtures in solution form in the water-cement ratio calculations.

3. Do not use any admixture that contains chlorides or other corrosive elements in any concrete. Admixtures shall be nontoxic after 30 days. Use admixtures in compliance with the manufacturer's printed instructions. The manufacturer shall certify the compatibility of multiple admixtures used in the same mix. Do not use admixtures in greater dosages than recommended by manufacturer.

6. Water Reducing:

a. Class A concrete; a water-reducing admixture conforming to ASTM C494, Type A and compatible with the air-entraining admixtures. The amount of admixture added to the concrete shall be in accordance with the manufacturer's recommendations.

b. Products:

(1) BASF Corporation; Polyheed Series

(2) Sika Corporation, Plastocrete 161

(3) WR Grace & Co.; Darex II-AEA

(4) The Euclid Chemical Company; Eucon NW

7. Water Reducing and Retarding:

a. Class A concrete; a water-reducing and retarding admixture conforming to ASTM C494, Type D and compatible with the air-entraining admixtures. The

amount of admixture added to the concrete shall be in accordance with the manufacturer's recommendations.

b. Products:

(1) BASF Corporation; Pozzolith Series

(2) Sika Corporation; Plastiment

(3) The Euclid Chemical company; Eucon WR-91

8. High-Range Water-Reducing Admixture (Superplasticizer):

a. Class A concrete; a High-Range water-reducing admixture conforming to ASTM C494, Type F or ASTM C1017, Type I.

b. Products:

(1) BASF Corporation; Glenium Series

(2) WR Grace & Co.; Daracem 100

(3) The Euclid Chemical Company; Eucon SP

9. Shrinkage Reducing Admixture:

a. Class A concrete; shrinkage-reducing admixture is permitted to be used in the mix to meet shrinkage limitations provided that specified strength are met and there is no reduction in sulfate resistance and no increase in permeability. Quantity of shrinkage-reducing admixture used in the mix shall be added to the quantity of water for purposes of determining the water/cementitous materials ratio.

d. Products:

(1) BASF Corporation; MasterLife SRA 20

(2) GCP Applied Technologies; Eclipse

(3) The Euclid Chemical company; Eucon SRA

I. Epoxy Bonding Agent:

1. Epoxy bonding agent shall conform to ASTM C881 Type I, II, IV or V; Grade 2 for epoxy resin adhesives. The class of epoxy bonding agent shall be suitable for ambient and substrate temperatures.

2. Products:

a. Sika Corporation; Sikadur 32, Hi-Mod

b. Euclid Chemical Company; Duralcrete

c. BASF Corporation, MasterEmaco ADH 326

3. Vapor Retarder: [10 mil] [0.25 mm] polyethylene sheet conforming to ASTM E1745.

J. Curing Compound:

1. Liquid form, which will form impervious membrane over, exposed surface of concrete when applied to fresh concrete by means of spray gun. Compound shall not inhibit future bond of floor covering or concrete floor treatment. Use Type I-D compound with red fugitive dye, Class B, having 18 percent minimum solids conforming to ASTM C309.

2. Provide a copy of manufacturer's certification that the curing compound meets the requirements of ANSI/NSF 61 for concrete surfaces that will be in contact with potable water.

3. Products:

a. BASF Building Systems; MasterKure 1315WB.

b. Euclid Chemical Company; Super Diamond Clear VOX.

c. W. R. Meadows, Inc.; VOCOMP-30.

d. Dayton Superior Corp; Safe Cure and Seal 30 percent.

K. Burlap Mats:

1. Conform to AASHTO M182.

L. Sisal-Kraft Paper and Polyethylene Sheets for Curing:

1. Conform to ASTM C171.

2.02 MIXES:

J. Conform to ASTM C94, except as modified by these specifications.

K. Provide concrete with the following compressive strengths at 28 days and proportion it for strength and quality requirements in accordance with ACI 318. The resulting mix shall not conflict with limiting values specified in Table 03 30 00-1.

Table 03 30 0003300-1				
Class	Type of Work	28-Day Minimum Compressive Strength (psi)[Mpa]	Minimum Cementitous Content (lbs per C.Y.)	Maximum Water/ Cement Ratio
A	Concrete for all structures and concrete not otherwise specified. Concrete fill at structure foundations, cradle, supports across pipe trenches, and reinforced pipe encasement.	4,500	560	0.42
B	Concrete topping	3,000	500	0.40
C	Miscellaneous unreinforced concrete.	2,000	376	0.40

L. Measure slump in accordance with ASTM C143:

1. Proportion and produce the concrete to have a maximum slump of 4 inches . A tolerance of up to 1 inch above the indicated maximum is allowed for individual batches provided the average for all batches or the most recent 10 batches tested, whichever is fewer, does not exceed the maximum limit. Concrete of lower than usual slump may be used provided it is properly placed and consolidated.

2. Mixes containing water reducers shall have a maximum slump of 6 inches after the addition of a mid-range water reducer and maximum slump of 8 inches after the addition of a high range water reducer.

M. Pozzolan Content:

1. Fly ash shall not exceed 20 percent of the total cementitious content.

N. Aggregate Size:

1. Aggregate size shall be 3/4-inch maximum for slabs and sections 8 inches thick and less. Aggregate size shall be 1 inch maximum for sections greater than 8 inches and less than 17 inches. Aggregate size shall be 1-1/2 inches maximum for all larger slabs and sections. Aggregate size for floor topping shall be maximum 3/8-inch.

2. Combined aggregate grading shall be as shown in the following table:

Table 03 30 00-2				
Maximum Aggregate Size	1-1/2 inch	1 inch	3/4-inch	3/8-inch
Aggregate Grade per ASTM C33	467	57	67	8

PART 3 - EXECUTION

3.02 INSPECTION:

A. Examine the subgrade and the conditions under which work is to be performed and notify the Engineer in writing of unsatisfactory conditions. Do not proceed with the work until unsatisfactory conditions are corrected to comply with specified subgrade conditions in a manner acceptable to the Engineer.

3.03 MIXING AND TRANSPORTING CONCRETE:

A. General: Conform to concreting procedures set forth in ASTM C94, ACI 304R and as specified herein.

1. Transport concrete to discharge locations without altering the specified properties of water-cement ratio, slump, air entrainment, temperature and homogeneity.

2. Discharge concrete into forms within 1-1/2 hours after cement has entered mixing drum or before the drum has revolved 300 revolutions after the addition of water, whichever occurs first.

3. Do not add water at the jobsite unless permitted by the Engineer. If it is necessary to add water to obtain the specified slump, add water per ASTM C94, but do not exceed the maximum water content in the reviewed concrete design mix. Added water shall be incorporated by additional mixing of at least 35 revolutions.

4. Do not add water to concrete containing high range water reducing admixture. Do not add water to concrete in delivery equipment not acceptable for mixing.

5. Keep a record showing time and place of each pour of concrete, together with transit-mix delivery slips certifying the contents of the pour.

6. Discharge of concrete shall be completed within the limits set out in Table 03 30 00-3.

Table 03 30 00-3	
Maximum Time to Concrete Discharge	
Concrete Temperature	Limit
Over 90 Degree F	Remove concrete from jobsite and discard concrete
86 to 90 Degree F	45 minutes

Table 03 30 00-3	
Maximum Time to Concrete Discharge	
Concrete Temperature	Limit
81 to 85 Degree F	60 minutes
70 to 80 Degree F	75 minutes
Below 70 Degree F	90 minutes

B. Conveying: Convey concrete from agitator or mixer truck to place of final deposit in forms by one of the following methods:

1. Buckets or hoppers with discharge gates having a clear opening equal to not less than one-third the maximum interior horizontal area or five times the maximum aggregate size being used, whichever is greater, and side slopes of not less than 60 degrees to horizontal.

2. Buggies or wheelbarrows equipped with pneumatic tires.

3. Round bottom, metal or metal-lined chutes with inclined slope of between 2 to 3 feet horizontally to 1 foot vertically and of sufficient capacity to avoid overflow.

4. Circular drop pipes with a top diameter of at least eight times the maximum aggregate size, but not less than 6 inch, or tapered to not less than six times maximum aggregate size.

3.04 CONCRETE ACCEPTANCE:

A. Accept or reject each batch of concrete delivered to the point of agitator or mixer truck discharge. Sign delivery batch tickets to indicate concrete acceptance.

B. Reject concrete delivered without a complete concrete delivery batch ticket as specified herein. The concrete supplier will furnish copies of the signed batch ticket to the Contractor and Engineer.

C. The testing agency shall perform field tests at the point of agitator or mixer truck discharge. Accept or reject concrete on the basis of conformity with slump, air content and temperature specified.

D. The testing agency shall inspect concrete transit truck's barrel revolution counter and gauge for measuring water added to the concrete. Reject concrete that exceeds the maximum barrel revolution of 300, the limits in Table 03 30 00-3 or concrete that has water content exceeding the specified water-cement ratio.

E. Reject concrete not conforming to specification before discharging into the forms.

3.05 PREPARATION AND COORDINATION:

M. Contractor shall notify the Engineer of readiness to place concrete in any portion of the work a minimum of 5 working days prior to concrete placement. Failure to provide this notification will be cause for delay in placing until observations can be completed.

N. Reinforcement, installation of waterstop, positioning of embedded items, and condition of formwork will be observed by the Engineer prior to concrete placement.

O. Coordinate the sequence of placement such that construction joints will occur only as designed.

P. Schedule sufficient equipment for continuous concrete placing. Provide for backup equipment and procedures to be taken in case of an interruption in placing. Provide backup concrete vibrators at the project site. Test concrete vibrators the day before placing concrete.

Q. Compact the subgrade and/or bedding. Saturate the subgrade approximately eight hours before placement and sprinkle ahead of the placement of concrete in areas where vapor barrier is not used. Remove standing water, mud, and foreign matter before concrete is deposited.

R. Where shown on contract drawings, intentionally roughen surfaces of set concrete in a manner to expose bonded aggregate uniformly at joints.

S. When shown on contract drawings, install a granular base beneath slabs on ground. Place granular material on a compacted subgrade and compact granular base.

T. Where concrete is required to be placed and bonded to existing concrete, coat the contact surfaces with epoxy bonding agent. The method of preparation and application of the bonding agent shall conform to the manufacturer's recommendations.

3.06 CONCRETE PLACEMENT:

A. Placement shall conform to ACI 304R as modified by these specifications.

B. Alternate sections of concrete walls and slabs may be cast simultaneously. Do not place adjacent sections of walls and slabs until seven days after placement of first placed concrete.

C. Do not place concrete until free water has been removed or has been diverted by pipes or other means and carried out of the forms, clear of the work. Do not deposit concrete underwater, and do not allow free water to rise on any concrete until the concrete has attained its initial set. Do not permit free or storm water to flow over surfaces of concrete so as to injure the quality or surface finish.

D. Do not place concrete during inclement weather. Protect concrete placed from inclement weather. Keep sufficient protective covering ready at all times for this purpose.

E. Deposit concrete at or near its final position to avoid segregation caused by rehandling or flowing. Do not deposit concrete in large quantities in one place to be worked along the forms with a vibrator.

F. Deposit concrete continuously and in level layers 1 to 2 feet thick. Avoid inclined layers and cold joints. Place concrete at lower portion of slope first on sloping surfaces.

G. Do not deposit partially hardened concrete in forms. Retempering of partially hardened concrete is not permitted. Remove partially hardened concrete from site at no additional compensation.

H. Do not allow concrete to fall freely in forms to cause segregation (separation of coarse aggregate from mortar). Limit maximum free fall of concrete to 4 feet. Do not move concrete horizontally more than four feet from point of discharge. Space points of deposit not more than eight feet apart.

I. At least two hours shall elapse after depositing concrete in the columns or walls before depositing in beams, girders, or slabs supported thereon. Place beams, girders, brackets, column capitals, and haunches monolithically as part of the floor or roof system, unless otherwise shown on contract drawings.

J. Consolidate concrete using mechanical vibrators operated within the mass of concrete and/or on the forms conforming to procedures set forth in ACI 309R and as specified herein.

K. Conduct vibration to produce concrete of uniform texture and appearance, free of honeycombing, streaking, cold joints or visible lift lines.

S. Conduct vibration in a systematic manner with regularly maintained vibrators. Furnish sufficient backup units at job site. Use vibrators having minimum frequency of 8,000 vibrations per minute and of sufficient amplitude to consolidate concrete. Use not less than one vibrator with crew for each 35 to 40 cubic yards of concrete placed per hour.

T. Insert and withdraw vibrator vertically at a uniform spacing over the entire area of placement. Space distances between insertions such that spheres of influence of each insertion overlap.

U. Use additional vibration with pencil vibrators on vertical surfaces and on exposed concrete to bring full surface of mortar against the forms so as to eliminate air voids, bug holes and other surface defects. Employ the following additional procedures for vibrating concrete as necessary to maintain proper consolidation of concrete:

1. Reduce distance between internal vibration insertions and increase time for each insertion.

2. Insert vibrator as close to face of form as possible without contacting form or reinforcement.

3. Thoroughly vibrate area immediately adjacent to waterstops without damaging the waterstop.

4. Use spading as a supplement to vibration where particularly difficult conditions exist.

V. Pumping Concrete:

1. Conform to the recommendations of ACI 304.2R except as modified herein.

2. Base pump size on rate of concrete placement, length of delivery pipe or hose, aggregate size, mix proportions, vertical lift, and slump of concrete.

3. Use pipe with inside diameter of at least three times the maximum coarse aggregate size, but not less than 2 inches.

4. Do not use aluminum pipes for delivery of concrete to the forms.

W. Waterstops:

1. Prevent displacement of waterstops during concrete placement,

3.07 CURING AND PROTECTION:

A. General:

1. Protect concrete from premature drying, hot or cold temperatures, and mechanical injury, beginning immediately after placement and maintain concrete with minimal moisture loss at relatively constant temperature.

2. Comply with curing procedures set forth in ACI 301, ACI 308 and as specified herein.

3. Perform hot weather concreting in conformance with ACI 305R and as specified herein when the ambient atmospheric temperature is 80 degrees F or above.

4. Perform cold weather concreting in conformance with ACI 306R.

5. Concrete required to be moist cured shall remain moist for the entire duration of the cure. Repeated wetting and drying cycles of the curing process will not be allowed.

B. Curing Duration:

1. Start initial curing after placing and finishing concrete as soon as free moisture has disappeared from unformed concrete surfaces. Initial curing starts as soon as concrete achieves final set. Forms left tightly in place are considered as part of the curing system, provided that wooden forms are kept continuously moist. Keep continuously moist for not less than 72 hours.

2. Begin final curing procedures immediately following initial curing and before the concrete has dried. Continue final curing for at least 7 days and in accordance with ACI 301 procedures for a total curing period, initial plus final, of at least 10 days.

3. Avoid rapid drying at the end of the final curing period

C. Curing Requirements:

1. Unformed Surfaces: Cover and cure entire surface of newly placed concrete immediately after completing finishing operations and water film has evaporated from surface or as soon as marring of concrete will not occur. Protect finished slabs from direct rays of the sun to prevent checking, crazing and plastic shrinkage.

2. Formed Surfaces: Minimize moisture loss for formed surfaces exposed to heating by the sun by keeping forms wet until safely removed. Keep surface continuously wet by warm water spray or warm water saturated fabric immediately following form removal unless otherwise permitted by the Engineer.

3. Water containment and below Grade Structures: Moist cure by the application of water to maintain the surface in a continually wet condition unless otherwise permitted by the Engineer. Use water that is free of impurities that could etch or discolor exposed concrete surfaces.

4. Other concrete: Moist cure by moisture-retaining cover curing, or by the use of curing compound.

D. Curing Methods:

1. Water Curing: Use water curing for unformed surfaces. Continuously water cure all exposed concrete for the entire curing period. Provide moisture curing by any of the following methods:

a. Keeping the surface of the concrete continuously wet by ponding or immersion.

b. Continuous water-fog spray or sprinkling.

c. Covering the concrete surface with curing mats, thoroughly saturating the mats with water, and keeping the mats continuously wet with sprinklers or porous hoses. Place curing mats so as to provide coverage of the concrete surfaces and edges, with a 4-inch lap over adjacent mats. Weight down the curing cover to maintain contact with the concrete surface.

2. Sealing Materials:

a. Use common sealing materials such as plastic film or waterproofing (kraft) paper.

b. Lap adjacent sheets a minimum of 12 inch. Seal edges with waterproof tape or adhesive. Use sheets of sufficient length to cover sides of concrete member.

c. Place sheet materials only on moist concrete surfaces. Wet concrete surface with fine water spray if the surface appears dry before placing sheet material.

d. The presence of moisture on concrete surfaces at all times during the prescribed curing period is proof of acceptable curing using sheet material.

3. Membrane Curing Compound:

a. Apply membrane-curing compound uniformly over concrete surface by means of roller or spray at a rate recommended by the curing compound manufacturer, but not less than 1 gallon per 150 sq. ft. of surface area. Agitate curing material in supply container immediately before transfer to distributor and thoroughly agitate it during application for uniform consistency and dispersion of pigment.

b. Do not use curing compounds on construction and expansion joints or on surfaces to receive liquid hardener, dustproofer/sealer, concrete paint, tile, concrete fills and toppings or other applications requiring positive bond.

c. Reapply membrane-curing compound to concrete surfaces that have been subjected to wetting within 3 hours after curing compound has been applied by method for initial application.

E. Protection from environmental conditions: Maintain the concrete temperature above 50 degrees F continuously throughout the curing period. Make arrangements before concrete placing for heating, covering, insulation or housing to maintain the specified temperature and moisture conditions continuously for the curing period.

1. When the atmospheric temperature is 80 degrees F and above, or during other climatic conditions which will cause too rapid drying of the concrete, make arrangements before the start of concrete placing for the installation of wind breaks or shading, and for fog spraying, wet sprinkling, or moisture-retaining covering.

2. Protect the concrete continuously for the entire curing period.

3. Maintain concrete temperature as uniformly as possible and protect from rapid atmospheric temperature changes.

4. Avoid temperature changes in concrete that exceed 5 degrees F in any one hour and 50 degrees F in any 24-hour period.

F. Protection from physical injury: Protect concrete from physical disturbances such as shock and vibration during curing period. Protect finished concrete surfaces from damage by construction equipment, materials, curing procedures and rain or running water. Do not load concrete in such a manner as to overstress concrete.

G. Protection from Deicing Agents: Do not apply deicing chemicals to concrete.

3.08 FIELD QUALITY CONTROL:

A. Hot Weather Requirements

1. During hot weather, give proper attention to ingredients, production methods, handling, placing, protection, and curing to prevent excessive concrete temperatures or water evaporation in accordance with ACI 305R and the following.

2. When the weather is such that the temperature of the concrete as placed would exceed 90 degrees F, use ice or other means of cooling the concrete during mixing and transportation so that the temperature of the concrete as placed will not exceed 90 degrees F.

3. Take precautions when placing concrete during hot, dry weather to eliminate early setting of concrete. This includes protection of reinforcing from direct sunlight to prevent heating of reinforcing, placing concrete during cooler hours of the day, and the proper and timely application of specified curing methods.

4. There will be no additional reimbursement to the Contractor for costs incurred for placing concrete in hot weather.

C. Cold Weather Requirements

1. Provide adequate equipment for heating concrete materials and protecting concrete during freezing or near-freezing weather in accordance with ACI 306R and the following.

2. When the temperature of the surrounding atmosphere is 40 degrees F or is likely to fall below this temperature, use heated mixing water not to exceed 140 degrees F. Do not allow the heated water to come in contact with the cement before the cement is added to the batch.

3. When placed in the forms during cold weather, maintain concrete temperature at not less than 55 degrees F. Materials shall be free from ice, snow, and frozen lumps before entering the mixer.

4. Maintain the air and the forms in contact with the concrete at temperatures above 40 degrees F for the first five days after placing, and above 35 degrees F for the remainder of the curing period. Provide thermometers to indicate the ambient temperature and the temperature 2 inches inside the concrete surface.

5. There will be no additional reimbursement made to the Contractor for costs incurred for placing concrete during cold weather.

E. Backfill Against Walls

1. Do not place backfill against walls until the concrete has obtained a compressive strength equal to the specified 28-day compressive strength. Where backfill is to be placed on both sides of the wall, place the backfill uniformly on both sides.

2. Do not backfill the walls of structures that will be laterally restrained or supported by suspended slabs or slabs on grade until the slab is poured and the concrete has reached the specified compressive strength.

F. Concrete Testing

1. Concrete quality testing will be performed on the concrete by independent testing agency retained by the Contractor.

3. The testing agency will use concrete samples provided by the Contractor at the point of agitator or mixer truck discharge to perform slump (per ASTM C143) , air content (per ASTM C231), and temperature tests (per ASTM C1064) and for field control test specimens.

4. The testing agency will submit test reports of concrete field measurements specified above to the Contractor and to the Engineer.

5. Provide and maintain facilities for safe storage and proper curing of concrete test specimens on the project site, as required by ASTM C31.

6. Concrete Quality Test Specimen:

b. Perform sampling and curing of test specimen in accordance with ASTM C31.

c. Testing agency personnel will record truck and load number from the delivery batch ticket, the concrete placement location of each specimen, the date, concrete strength, slump, air content and temperature.

d. The testing agency will cast a minimum of one set of 6 test specimens, each 4-inch diameter by 8-inch-long cylinders, for each 50 cubic yard of each mix design of concrete but not less than once a day nor less than once for each 5,000 sq. ft. of surface area of foundation mats, base slabs, footings, pile caps, slabs on grade, grade beams, walls, or elevated slabs.

e. Test cylinders in accordance with ASTM C39. Test one cylinder at 7 days for information; test three cylinders at 28 days for acceptance; and hold two reserve cylinder**s** for verification. Strength acceptance will be based on the average of the strengths of the three cylinders tested at 28 days. If one cylinder of a 28-day test manifests evidence of improper sampling, molding, or testing, other than low strength, discard it and use a reserve cylinder for the test result.

7. The Contractor may take field control test specimens for small quantities of concrete.

8. Concrete acceptance shall be based on the requirements of ACI 318.

9. Field cured cylinders conforming to ASTM C31 will be required to determine field compressive strength of concrete. Laboratory cured cylinders for concrete quality testing shall not be used for determining field compressive strength.

10. Concrete Coring:

    a. When the concrete quality test specimen compression tests fail to be in compliance with the Contract Documents or when the Engineer detects deficiencies in the concrete, the Contractor will take concrete cores at least 2 inches in diameter from the structure in conformance with ASTM C 42 at locations determined by the Engineer.

    b. Obtain at least three representative cores from each member or area of concrete that is considered potentially deficient.

    c. Obtain additional cores to replace cores that show evidence of having been damaged subsequent to or during removal from the structure.

    d. The testing agency shall compression test the cores taken from the structure in conformance with ASTM C39 and submit test strength test results of cores specified above to the Contractor and to the Engineer.

    e. All costs associated with coring and testing of cores will be borne by the Contractor at no additional cost to the Owner.

3.14 CLOSEOUT ACTIVITIES:

A. Provide in accordance with Section 01 77 00.

END OF SECTION

SECTION 03 35 00

CONCRETE FINISHES AND FLOOR TREATMENT

PART 1 - GENERAL

1.1 DESCRIPTION

A. This section describes materials and methods of concrete finishes for cast in place concrete and floor treatment.

1.2 REFERENCES

A. American Concrete Institute (ACI):

1. 301: Specifications for Structural Concrete.

2. 302.1R: Guide to Concrete Floor and Slab Construction.

3. 311.4R: Guide for Concrete Inspection.

B. ASTM International (ASTM):

1. D4263: Standard Test Method for Indicating Moisture in Concrete by the Plastic Sheet Method.

1.3 SUBMITTALS

A. Submit following shop drawings in accordance with 01 33 00.

B. Submit manufacturer's product data and surface preparation and application instructions.

C. Submit VOC content information for floor treatment products.

D. Qualifications:

1. Submit statement of qualifications, experience, and training of concrete finishing personnel.

1.4 QUALITY ASSURANCE

A. Prior to concrete construction, develop an outlined quality control program for concrete finishing.

B. For concrete that will receive additional applied floor finishes, ensure that concrete surface finish and preparation is compatible with the accepted floor finish

manufacturer's products. Provide documentation from the floor product manufacturer that specifies the concrete finish and preparation required for proper installation of the floor products.

C. Make changes in concrete finishes and preparation necessary to accommodate flooring products different from those specified at no additional cost to the Owner. Submit the proposed new finishes and their construction methods to the Engineer.

PART 2 - PRODUCTS

2.1 FLOOR SEALER

A. Shall be VOC compliant.

B. Products:

1. Dayton Superior; Cure & Seal 1315 EF.

2. Euclid Chemical Company; Super Diamond Clear VOX.

3. LATICRETE International, Inc.; L&M Dress and Seal WB 30.

4. Or approved equal.

2.2 CLEAR FLOOR HARDENER

A. Provide a colorless, aqueous solution of zinc and magnesium fluorosilicate.

B. Products:

1. Euclid Chemical Company: Eucosil.

2. BASF Construction Chemicals: MasterKure HD 100WB.

3. Or approved equal.

2.3 EPOXY BONDING AGENT

A. Shall be in accordance with Section 03 30 00.

2.4 CONCRETE REPAIR MATERIAL

A. Epoxy Crack Repair Binder:

1. Epoxy crack repair binder shall be a two-component, 100 percent solids, high-modulus, low viscosity epoxy adhesive suitable for crack grouting by injection.

2. Products:

a. Sika Corporation; Sikadur 52.

b. Or approved equal.

B. Polymer Modified Cementitous Mortar:

1. Repair spalls not requiring formwork using a two-component, polymer-modified cementitious mortar having a minimum 28-day compressive strength of 6,000 psi.

2. Spall repair mortar for use in horizontal applications.

a. Products:

(1) Sika Corporation; Sikatop 122 Plus.

(2) Or approved equal.

3. Spall repair mortar for use in vertical applications.

a. Products:

(1) Sika Corporation; Sikatop 123 Plus.

(2) Or approved equal.

PART 3 - EXECUTION

3.1 CONCRETE FINISHES

A. Do not use curing compound where epoxy, urethane, mortar bed, grout, additional concrete or other toppings or adhesive will be applied.

B. Do not sprinkle with dry cement or add water when finishing concrete surfaces.

C. Finish concrete surfaces in accordance with the following schedule:

Table 03 3500-1	
Finish Designation	Area Applied
F-1	Beams, columns, and exterior walls not exposed to view.
F-2	Not used.
F-3	Walls, beams, and columns exposed to view and to 1 foot below finished grade. Underside of formed floors or slabs. EXCEPTION: Surfaces that are to be coated.
F-4	Exterior and interior surfaces to be coated.
S-1	Slabs and floors to be covered with concrete or grout.
S-2	Slabs and floors not liquid containing.
S-3	Slabs and floors exposed to view. Slab surfaces to receive sealer or hardener shall be prepared in accordance with product manufacturer's requirements.
S-4	Not used.
S-5	Slabs and floors at slopes greater than 10 percent and stairs.
E-1	Exposed edges.
E-2	Top of walls, beams, and similar unformed surfaces.

1. Finish F-1: Repair defective concrete, fill depressions deeper than 1/2-inch, and fill tie holes.

2. Finish F-2: Not used.

3. Finish F-3: Repair defective concrete, remove fins, fill depressions 1/4-inch or deeper, and fill tie holes. Fill depressions and airholes with mortar. Dampen surfaces and then spread a slurry consisting of one part cement and one and one-half parts sand by damp loose volume, over the surface with clean burlap pads or sponge rubber floats. Remove any surplus by scraping and then rubbing with clean burlap.

4. Finish F-4: Repair defective concrete, remove fins, fill depressions 1/16-inch or deeper, fill tie holes, remove mortar spatter, and remove bulges higher than 1/16-inch.

5. Finish S-1: Screed to grade without special finish unless otherwise shown on contract documents. Roughen and/or apply bonding agent where shown on contract drawings.

6. Finish S-2: Smooth steel trowel finish. Do not hard trowel.

7. Finish S-3: Steel trowel finish free from trowel marks and all irregularities. Do not hard trowel.

8. Finish S-4: Not used.

9. Finish S-5: Steel trowel finish without local depressions or high points. Apply a stiff bristle broom finish. Leave broom lines parallel to the direction of slope drainage. Do not hard trowel.

10. Finish E-1: Provide 3/4-inch chamfer on external corners of exposed concrete walls, beams, columns, equipment pads, and exposed edges of construction joints. Do not chamfer columns flush with concrete block walls.

11. Finish E-2: Strike smooth and float to an F-3 or F-4 finish.

D. Protect finished concrete surfaces from damage by construction equipment, materials, curing procedures, and rain or running water.

3.2 FINISHING OF FORMED SURFACES

A. Cure surfaces until finishing and repairing are completed.

B. Perform finish work in accordance with the schedule in Table 03 3500-1 as soon as possible after forms are removed.

C. Conform to the requirements specified in Section 03 1000 for tolerances for formed surfaces.

3.3 FINISHING OF UNFORMED SURFACES

A. Perform finish work in accordance with the schedule in Table 03 3500-1.

B. Provide S-3 steel-trowel finish to all top, horizontal and inclined surfaces not otherwise specified or indicated. This includes concrete fills and toppings and floors.

C. Provide S-5 broom finish to exterior walkways, exterior stairs, entrance platforms, and loading docks.

3.4 FLOOR TREATMENT APPLICATION

A. Prepare concrete surface in accordance with manufacturer’s printed instructions.

B. Perform concrete moisture testing in accordance with product manufacturer’s requirements.

C. Apply floor treatment in accordance with product manufacturer’s written instructions.

D. Apply hardener to risers and treads of concrete stairs.

3.5 CONCRETE REPAIR

A. Surface Defects:

1. Do not repair defects until concrete has been inspected by the Engineer.

2. Repair defects including, air voids and bug holes with a nominal diameter or depth greater than 1/4-inch, honeycombed areas, visible construction joints, fins, burrs, color and texture variations and other defects as determined by the Engineer. Make concrete repairs with a polymer modified cementitous repair mortar to produce a concrete surface uniform in color and texture and free of all irregularities.

3. Make final finished surface of patches flat, level and even with the existing concrete surface. Do not feather repair mortar to meet existing concrete surface.

B. Epoxy Crack Repair:

1. Cracks on horizontal surfaces: When permitted by the Engineer, repair existing structural cracks by gravity feeding an epoxy crack repair binder into the prepared crack.

   a. Grout concrete surface at the crack to form a minimum 1/4-inch wide by 1/4-inch deep V-notch and clean to remove all loose and foreign particles. Fill crack with clean, dry sand and pour epoxy crack repair binder into V notch, completely filling crack.

   b. As binder penetrates into crack, apply additional binder to the V-notch.

2. Cracks on vertical or horizontal surfaces: Repair existing structural cracks by pressure injecting an epoxy crack repair binder into the prepared crack. Seal cracked surfaces and install injection ports per manufacturer's recommendations.

   a. Do not cut reinforcement steel when drilling holes injection ports. If rebar is encountered during drilling, abandon the hole and relocate. Patch the abandoned hole immediately with epoxy mortar flush with the surface of the existing concrete.

   b. Once the surface sealing material has cured, inject crack with epoxy crack repair binder as directed by the manufacturer.

   c. Remove injection ports upon satisfactory completion of crack injection and patch with epoxy mortar.

3.6 CLOSEOUT ACTIVITIES

A. Provide in accordance with Section 01 77 00.

END OF SECTION

SECTION 03 60 00

GROUT

PART 1 - GENERAL

1.01 DESCRIPTION:

A. Furnish all labor, materials, equipment, and incidentals required, and install grout complete as shown on the Drawings and as indicated and in compliance with Contract Documents.

1.02 SUMMARY:

A. Section Includes:

1. Material for grouting reinforcing bars, anchor bolts into existing or newly placed concrete.

2. Material for grouting under bearing plates for columns or beams.

3. Materials for grouting under equipment.

4. Materials for miscellaneous grouting including but not limited to railing posts, equipment guides, and bollards etc.

1.03 REFERENCE STANDARDS:

A. American Association of State Highway and Transportation Officials (AASHTO):

1. M182: Burlap Cloth made from Jute or Kenaf

B. American Petroleum Institute (API):

1. RP 686: Recommended Practice for Machinery Installation and Installation Design

C. ASTM International (ASTM):

1. C33: Standard Specification for Concrete Aggregates

2. C150: Standard Specification for Portland Cement

3. C531: Test Method for Linear Shrinkage and Coefficient of Thermal Expansion of Chemical Resistant Mortars, Grouts, and Monolithic Surfacing

4. C827: Standard Test Method for Change in Height at Early Ages of Cylindrical Specimens from Cementitious Mixes

5. C1107: Standard Specification for Packaged Dry, Hydraulic, Cement Grout (Non-shrink)

6. D695: Standard Test Method for Compressive Properties of Rigid Plastics

D. U.S. Army Corps of Engineers Standard (CRD):

1. C621: Corps of Engineers Specification for Non-shrink Grout

1.04 DESIGN REQUIREMENTS:

A. Design grout and related anchorage systems in accordance with the design loads specified on the contract drawings or as required by the equipment manufacturer.

B. The design and selection of the grout and grouting system shall be based on the duration and magnitude of the load and the frequency of application. The use of a grout for a specific application shall be verified by the manufacturer of the grout.

1.05 SUBMITTALS:

A. Submit the following shop drawings in accordance with Section 01 33 00.

B. Product Data:

1. Commercially manufactured non-shrink, non-metallic cementitious grout:

a. Include catalogue cuts, technical data, storage requirements, product life, working time after mixing, temperature considerations, conformity to referenced ASTM standards, and Material Safety Data Sheet.

2. Commercially manufactured non-shrink epoxy grout:

a. Include catalogue cuts, technical data, storage requirements, product life, working time after mixing, temperature considerations, conformity to referenced ASTM Standards and Material Safety Data Sheet.

3. Cement grout:

a. Include the type and brand of the cement, the gradation of the fine aggregate, product data on any proposed admixtures, and the proposed mix of the grout.

4. Concrete grout:

a. Include data for concrete as delineated in Section 03 30 00. This includes the mix design, constituent quantities per cubic yard and the water/cement ratio.

5. Bonding Agent:

a. Include catalogue cuts, technical data, storage requirements, product life, working time after mixing, temperature considerations, conformity to referenced ASTM standards, and Material Safety Data Sheet.

C. Laboratory Test Reports.

1. Submit laboratory test data as required under Section 03 30 00 for concrete to be used as concrete grout.

D. Mill test reports for each shipment of cement, regardless of quantity, prior to incorporation into the work.

E. Manufacturer's specifications and instructions for all admixtures, curing materials, adjustable inserts and non-shrink non-metallic grout. Manufacturer’s certification of compatibility of all admixtures.

1.06 QUALITY ASSURANCE:

A. Qualifications

1. Grout manufacturer to have a minimum of 5 years’ experience in the production and use of the type of grout proposed for the Work.

B. Field Testing

1. Field testing and inspection services required will be provided by the Contractor. Provide assistance in the sampling of materials and provide any ladders, platforms, etc. for access to the Work. Comply with the applicable ASTM Standards for testing.

3. The field testing of concrete grout will be as specified for concrete in Section 03 30 00.

4. Take compression test specimens from the first placement of each type of grout to ensure compliance with these Specifications.

a. Compression tests and fabrication of specimens for cement grout and non-shrink grout will be performed as specified in ASTM C109 at intervals during construction as selected by the Engineer**]**. A set of three specimens will be made for testing at one, seven and 28 days.

b. Compression tests and fabrication of specimens for epoxy grout will be performed as specified in ASTM C579, Method B. A set of three specimens will be made for testing at seven days.

1.07 RESPONSIBILITIES:

A. Assist the Owner in obtaining specimens for testing and furnish all materials necessary for fabricating the test specimens.

B. The cost of laboratory tests on grout will be paid by the Contractor except where test results show the grout to be defective. In such case, the Contractor shall pay for the tests, removal and replacement of defective work, and re-testing all at no cost to the Owner.

1.08 WARRANTY:

A. Warrant the materials and products specified in this Section against defective materials and workmanship with the manufacturer’s standard warranty, but for no less than one year from the date of substantial completion.

B. Warrant the work against defects for one year from the date of substantial completion.

1.10 DELIVERY, STORAGE, AND HANDLING:

A. Comply with the requirements in Section 01 66 10.

B. Deliver materials to the jobsite in original, unopened packages, clearly labeled with the manufacturer's name, product identification, batch numbers, and printed instructions.

C. Store materials in accordance with the manufacturer's recommendations. Total storage time from date of manufacture to date of installation shall be limited to six months or the manufacturer's recommended storage time, whichever is less.

E. Reject material that becomes damp, lumpy or otherwise unacceptable and immediately remove from the site and replace with acceptable material at no cost to the Owner.

F. Deliver non-shrink cement-based grouts as pre-blended, prepackaged mixes requiring only the addition of water.

G. Deliver non-shrink epoxy grouts as premeasured, prepackaged, three component systems requiring only blending as directed by the manufacturer.

1.11 SERVICES OF MANUFACTURER'S REPRESENTATIVE:

A. The Contractor shall provide the services of a qualified manufacturer's technical representative who shall instruct the Contractor's personnel in the mixing, proper use and application of the non-shrink grout and epoxy grout.

B. The manufacturer's representative shall provide written certification that materials have been mixed and applied properly and surfaces to receive these products have been prepared properly, all in conformance with manufacturer's requirements.

C. The on-site time required for the manufacturer's representative to achieve a successful installation shall be at the expense of the Contractor.

PART 2 - PRODUCTS

2.01 GENERAL:

A. Provide materials produced by one manufacturer or supplier in order to provide standardization of appearance.

2.02 APPLICATION:

A. Unless indicated otherwise, provide grouts as listed below:

Table 03 60 00-1

Type of Grout	Application
Cement Grout	Surface repairs
Non-Shrink – Class I	Storage tanks and other non-motorized equipment.
	Filling block-out spaces for embedded items such as railing posts, gate guide frames, etc. (Where placement time is less than 20 min.).
	Repair of holes and defects in concrete members that are not water bearing and not in contact with soil or other fill material.
Non-Shrink – Class II	Column base plates.
	Filling block-out spaces for embedded items such as railing posts, gate guide frames, etc. (where placement time exceeds 20 min.)
	Under precast concrete elements.
Non-Shrink Epoxy	Machinery subject to severe shock loads and high vibration.
Concrete Grout	Toppings and concrete/grout fill.

2.03 MATERIALS:

A. Non-shrink Class I Grout:

1. Non-shrink Class I Grout shall have a minimum 28-day compressive strength of 5000 psi, when mixed at a fluid consistency.

2. Non-shrink Class I grout shall meet the requirements of ASTM C1107, Grade B or C, when mixed to fluid, flowable and plastic consistencies.

4. Products:

a. Sika Corporation; SikaGrout 212.

b. Master Builders, Inc.; Set Grout.

c. The Euclid Chemical Company.; Euco NS.

B. Non-shrink Class II Grout:

1. Non-shrink grout shall be a high precision, fluid, extended working time grout. The minimum 28-day compressive strength shall be 7,500 psi, when mixed at a fluid consistency.

3. Grout shall have an extended working time of 30 minutes minimum when mixed to a fluid consistency as defined in ASTM C827 at temperature extremes of 45 to 90 degrees F in accordance with ASTM C1107.

4. Non-shrink grouts shall meet the requirements of ASTM C1107; Grade B or C when tested using the amount of water needed to achieve fluid consistency per ASTM C939.

5. The grout when tested shall not bleed or segregate at maximum allowed water.

6. Products:

a. Master Builders, Inc.; Masterflow 928.

b. The Euclid Chemical Company; Hi-Flow Grout.

c. Sika Corporation; SikaGrout 212.

C. Cement Grout:

1. Cement grouts shall be a mixture of one-part portland cement conforming to ASTM C150 types I, II, or III and one to two parts sand conforming to ASTM C33 with sufficient water to place the grout. The water content shall be sufficient to impart workability to the grout, but not to the degree that it will allow the grout to flow.

2. Cement grout materials shall be as indicated in section 03 30 00.

D. Concrete Grout:

1. Concrete grout shall conform to the requirements of Section 03 30 00 except as specified herein. Proportion with cement, coarse and fine aggregates, water, water reducer, and air entraining agent to produce a mix having an average strength of 2,000 psi at 28 days. Coarse aggregate size shall be 3/8-inch maximum. Keep the W/C ratio as low as practical while still retaining sufficient workability.

E. Non-shrink epoxy-based grout:

1. Provide a pre-proportioned, three component, 100 percent solids system consisting of epoxy resin, hardener, and blended aggregate. It shall have a compressive strength of 14,000 psi in seven days when tested in conformity with ASTM D695 and have a maximum thermal expansion of 30 x 10-6 when tested in conformity with ASTM C531.

2. Products:

a. Master Builders, Inc.; Ceilcote 648 CP.

b. U.S. Grout Corporation; Five Star Epoxy Grout.

c. Sika Corporation; Sikadur 42 Grout-Pak.

d. The Euclid Chemical Company; High Strength Epoxy Grout

F. Dry Pack Grout:

1. Make dry pack (to be packed or tamped in place) at no slump consistency.

2. When mixing the batch, add only enough water to the dry materials to produce a rather stiff mixture. Additions of water may be made in small increments until the desired consistency is obtained.

G. Non-epoxy Bonding Compound:

1. Provide non-epoxy bonding compound that is re-wetable for up to two weeks.

2. Products:

a. Larsen Products Corporation; Weldcrete.

b. Sta-Dry Manufacturing Corporation; Link.

c. The Euclid Chemical Company; Euco Weld.

H. Curing Materials:

1. Curing materials for cement grout shall be as specified in Specification 03 30 00 and as recommended by the manufacturer for prepackaged grouts.

PART 3 - EXECUTION

3.01 GENERAL:

A. Grout shall not be placed until base concrete or masonry has attained its design strength, unless authorized otherwise by the Engineer.

B. Prepare surfaces for curing, and protection of cement grout in accordance with Section 03 30 00.

C. Shade the work sites from sunlight for at least 24 hours before and 48 hours after grouting.

D. Contact the grout manufacturer's representative for assistance on hot and cold weather grouting techniques and precautions if applicable.

3.02 PREPARATION:

A. Clean concrete surfaces to receive grout free of ice, frost, dirt, grease, oil, curing compounds, laitance and paints, and free of all loose or unsound material or foreign matter that may affect the bond or performance of the grout.

B. Roughen concrete surfaces by chipping, sandblasting, or other mechanical means to ensure bond of the grout to the concrete. Remove loose or broken concrete. Irregular voids or projecting coarse aggregate need not be removed if they are sound, free of laitance and firmly embedded into the parent concrete.

C. Remove all loose rust, oil or other deleterious substances from metal embedment’s prior to the installation of the grout.

D. Wash concrete surfaces clean and keep them moist for at least 24 hours prior to the placement of cementitious or cement grout. Saturate by covering the concrete with a plastic sheet or using either a soaker hose, flooding the surface or other method acceptable to the Engineer. Remove visible water from the surface upon completion of the 24-hour period prior to grouting. Use an accepted adhesive bonding agent in lieu of surface saturation when accepted by the Engineer for each specific location of grout installation.

E. Epoxy based grouts do not require the saturation of the concrete substrate. Surfaces in contact with epoxy grout shall be completely dry before grouting.

F. Construct grout forms or other leak proof containment. Forms shall be lined or coated with release agents recommended by the grout manufacturer.

G. Support equipment during alignment and installation of grout by shims, wedges, blocks, or other accepted means. Prevent the shims, wedges, and blocking devices from bonding to the grout by appropriate bond breaking coatings and remove them after grouting unless otherwise accepted by the Engineer.

3.03 INSTALLATION:

A. Anchor bolts and threaded rod anchors:

1. Anchor bolts and threaded rod anchors shall be clean, dry and free of grease and other foreign matter when installed. The bolts, rods and bars shall be set and positioned, and the epoxy grout shall be placed and finished in accordance with the recommendations of the grout manufacturer. Care shall be taken to ensure that all spaces and cavities are filled with epoxy grout, without voids.

2. During assembly of all threaded stainless-steel components, anti-seize thread lubricant shall be liberally applied to the threaded portion not embedded in concrete.

B. Grouting machinery foundations:

1. Block out the original concrete or finish off a sufficient distance below the bottom of the machinery base to provide for the thickness of grout shown on the Contract Drawings. After the machinery has been set in position and placed at the proper elevation by steel wedges, the space between the bottom of the machinery base and the original placement of concrete shall be filled with a pourable non-shrink grout. Grout and grouting procedure shall be in accordance with API 686.

C. Cement Grouts and Non-shrink Cementitious Grouts:

2. Mix in accordance with manufacturer's recommendations. Do not add cement, sand, pea gravel, or admixtures without prior approval by the grout manufacturer and the Engineer.

3. Avoid mixing by hand. Pre-wet the mixer and empty excess water. Add premeasured amount of water for mixing, followed by the grout. Begin with the minimum amount of water recommended by the manufacturer and then add the additional water required to obtain workability. However, do not exceed the manufacturer's maximum recommended water content.

4. Place grout into the designated areas in a manner that will avoid segregation or entrapment of air. Do not vibrate grout to release air or to consolidate the material. Placement should proceed in a manner that will ensure the filling of all spaces and provide full contact between the grout and adjoining surfaces. Provide grout holes as necessary. Place grout rapidly and continuously to avoid cold joints. Do not place cement grouts in layers. Do not add additional water to the mix (re-temper) after initial stiffening.

5. Just before the grout reaches its final set, cut back the grout to the substrate at a 45-degree angle from the lower edge of bearing plate unless otherwise accepted by the Engineer.

6. Begin curing immediately after form removal, cutback, and finishing. Keep grout moist and within its recommended placement temperature range for at least 24 hours after placement or longer if recommended by the manufacturer.

D. Non-shrink Epoxy Grouts:

1. Apply bonding agent, if required, in accordance with the requirements of the grout manufacturer. Mix in accordance with the procedures recommended by the manufacturer. Do not vary the ratio of components or add solvent to change the consistency of the grout mix. Do not over mix. Mix full batches only to maintain proper proportions of resin, hardener, and aggregate. Partial mixes will be rejected and will require the suspect grout to be removed and be replaced.

3. Monitor ambient weather conditions and contact the grout manufacturer for special placement procedures to be used for temperatures below 60 degrees F or above 90 degrees F.

4. Place grout into the designated areas in a manner that will avoid trapping air. Placement methods shall ensure the filling of all spaces and provide full contact between the grout and adjoining surfaces. Provide grout holes as necessary.

5. The extension of grout horizontally beyond base plate shall be less than or equal to the grout thickness.

6. Epoxy grouts are self-curing and do not require the application of water. Maintain the formed grout within its recommended placement temperature range for at least 24 hours after placing, or longer if recommended by the manufacturer.

E. Concrete Grout:

1. Provide the underlying concrete surface with a broomed finish. Protect and keep the surface clean until placement of concrete grout.

3. Remove the debris and clean the surface of all dirt and other foreign materials.

4. Saturate the concrete surface for at least 24 hours prior to placement of the concrete grout. Remove excess water just prior to placement of the concrete grout. Place a cement slurry immediately ahead of the concrete grout so that the slurry is moist when the grout is placed. Work the slurry over the surface with a broom until it is coated with approximately 1/16- to 1/8-inch thick cement paste.

F. Dry Pack:

1. Dry pack consistency shall be such that the grout is plastic and moldable but will not flow.

2. The use of pneumatic pressure for dry-packed grouting requires acceptance of the Engineer.

3.04 CLOSEOUT ACTIVITIES:

A. Provide in accordance with Section 01 77 00.

END OF SECTION

SECTION 04 20 00

UNIT MASONRY AND ACCESSORIES

PART 1 - GENERAL

1.01 DESCRIPTION:

A. Provide unit masonry and accessories as indicated and in compliance with Contract Documents.

1. The work under this Section includes the following:

a. Concrete masonry units.

b. Mortar and grout.

c. Steel reinforcing bars.

d. Masonry joint reinforcement.

e. Ties and anchors.

f. Miscellaneous masonry accessories.

1.02 REFERENCES:

A. American Concrete Institute (ACI):

1. 530/ASCE 6/TMS 602: Building Code Requirements for Masonry Structures & Commentary.

2. 530.1/ASCE 6/ TMS 602: Specification for Masonry Structures & Commentary.

3. SP-66: ACI Detailing Manual.

B. ASTM International (ASTM):

1. A36/A36M: Standard Specification for Carbon Structural Steel

2. A82/A82M: Standard Specification for Steel Wire, Plain for Concrete Reinforcement.

3. A153/A153M: Standard Specification for Zinc Coating (Hot-Dip) on Iron and Steel Hardware.

4. A240/A240M: Standard Specification for Chromium and Chromium-Nickel Stainless Steel Plate, Sheet, and Strip for Pressure Vessels and for General Applications.

5. A276: Standard Specification for Stainless Steel Bars and Shapes

6. A307: Standard Specification for Carbon Steel Bolts and Studs, 60 000 PSI Tensile Strength.

7. A325/A325M: Standard Specification for Structural Bolts, Steel, Heat Treated, 120/105 ksi Minimum Tensile Strength

8. A563/A563M: Standard Specification for Carbons and Alloy Steel Nuts.

9. A580/A580M: Standard Specification for Stainless Steel Wire.

10. A615/A615M: Standard Specification for Deformed and Plain Carbon-Steel Bars for Concrete Reinforcement.

11. A641/A641M: Standard Specification for Zinc–Coated (Galvanized) Carbon Steel Wire.

12. A653/A653M: Standard Specification for Steel Sheet, Zinc-Coated (Galvanized) or Zinc-Iron Alloy-Coated (Galvannealed) by the Hot-Dip Process.

13. A666: Standard Specification for Annealed or Cold-Worked Austenitic Stainless Steel Sheet, Strip, Plate, and Flat Bar.

14. A951/A951M: Standard Specification for Steel Wire for Masonry Joint Reinforcement.

15. A1008/A1008M: Standard Specification for Steel, Sheet, Cold-Rolled, Carbon, Structural, High-Strength Low-Alloy, High-Strength Low-Alloy with Improved Formability, Solution Hardened, and Bake Hardenable.

16. B32: Standard Specification for Solder Metal.

17. B117: Standard Practice for Operating Salt Spray (Fog) Apparatus.

18. B370: Standard Specification for Copper Sheet and Strip for Building Construction.

19. B633: Standard Specification for Electrodeposited Coatings of Zinc on Iron and Steel.

20. C90: Standard Specification for Loadbearing Concrete Masonry Units.

21. C91: Standard Specification for Masonry Cement.

22. C109/C109M: Standard Test Method for Compressive Strength of Hydraulic Cement Mortars (Using 2-in. Cube Specimens).

23. C126: Standard Specification for Ceramic Glazed Structural Clay Facing Tile, Facing Brick, and Solid Masonry Units.

24. C140: Standard Test Methods of Sampling and Testing Concrete Masonry Units and Related Units.

25. C143/C143M: Standard Test Method for Slump of Hydraulic-Cement Concrete.

26. C144: Standard Specification for Aggregate for Masonry Mortar.

27. C150: Standard Specification for Portland Cement.

28. C199: Standard Test Method for Pier Test for Refractory Mortars.

29. C207: Standard Specification for Hydrated Lime for Masonry Purposes.

30. C270: Standard Specification for Mortar for Unit Masonry.

31. C404: Standard Specification for Aggregates for Masonry Grout.

32. C476: Standard Specification for Grout for Masonry.

33. C494/C494M: Standard Specification for Chemical Admixtures for Concrete.

34. C780: Standard Test Method for Preconstruction and Construction Evaluation of Mortars for Plain and Reinforced Unit Masonry.

35. C920: Standard Specification for Elastomeric Joint Sealants.

36. C979: Standard Specification for Pigments for Integrally Colored Concrete.

37. C1019: Standard Method of Sampling and Testing Grout.

38. C1093: Standard Practice for Accreditation of Testing Agencies for Masonry.

39. C1314: Standard Test Method for Compressive Strength of Masonry Prisms.

40. C1329: Standard Specification for Mortar Cement.

41. C1506: Standard Test Method for Water Retention of Hydraulic Cement-Based Mortars and Plasters.

42. D226: Standard Specification for Asphalt-Saturated Organic Felt Used in Roofing and Waterproofing.

43. D1056: Standard Specification for Flexible Cellular Materials - Sponge or Expanded Rubber.

44. D2000: Standard Classification System for Rubber Products in Automotive Applications.

45. D2287: Standard Specification for Nonrigid Vinyl Chloride Polymer and Copolymer Molding and Extrusion Compounds.

46. D4637: Standard Specification for EPDM Sheet Used In Single-Ply Roof Membrane.

47. E119: Standard Test Methods for Fire Tests of Building Construction and Materials.

48. E488: Standard Test Methods for Strength of Anchors in Concrete and Masonry Elements.

49. E514: Standard Test Method for Water Penetration and Leakage Through Masonry.

50. F593: Standard Specification for Stainless Steel Bolts, Hex Cap Screws, and Studs.

51. F594: Standard Specification for Stainless Steel Nuts.

52. F738M: Standard Specification for Stainless Steel Metric Bolts, Screws, and Studs.

C. National Concrete Masonry Association (NCMA):

1. TEK8-2A: Removal of Stains from Concrete Masonry

1.03 DEFINITIONS:

A. CMU(s): Concrete masonry unit(s).

B. Reinforced Masonry: Masonry containing reinforcing steel in grouted cells.

1.04 PERFORMANCE REQUIREMENTS:

A. Provide structural unit masonry that develops indicated net-area compressive strengths at 28 days.

1. Determine net-area compressive strength of masonry from average net-area compressive strengths of masonry units and mortar types (unit-strength method) according to Tables 1 and 2 in ACI 530.1/ASCE 6/TMS 602.

1.05 PRECONSTRUCTION TESTING:

A. Preconstruction Testing Service: Contractor will engage a qualified independent testing agency to perform preconstruction testing indicated below. Retesting of materials that fail to comply with specified requirements shall be done at Contractor's expense.

1. Clay Masonry Unit Test: For each type of unit required, according to ASTM C67 for compressive strength.

2. Concrete Masonry Unit Test: For each type of unit required, according to ASTM C140 for compressive strength.

3. Mortar Test (Property Specification): For each mix required, according to ASTM C109/C109M for compressive strength.

4. Mortar Test (Property Specification): For each mix required, according to ASTM C780 for compressive strength.

5. Grout Test (Compressive Strength): For each mix required, according to ASTM C1019.

1.06 SUBMITTALS:

A. Submit the following shop drawings in accordance with Section 01 33 00.

B. Product Data: For each type of product indicated.

C. Shop Drawings: For the following:

1. Masonry Units: Show sizes, profiles, coursing, and locations of special shapes.

2. Reinforcing Steel: Detail bending and placement of unit masonry reinforcing bars. Comply with ACI SP-66, "Details and Detailing of Concrete Reinforcement." Show elevations of reinforced walls.

3. Fabricated Flashing: Detail corner units, end-dam units, and other special applications.

D. Qualification Data: For testing agency.

E. Material Certificates: For each type and size of the following:

1. Masonry units.

a. Include data on material properties.

b. For masonry units used in structural masonry, include data and calculations establishing average net-area compressive strength of units.

2. Cementitious materials. Include brand, type, and name of manufacturer.

3. Preblended, dry mortar mixes. Include description of type and proportions of ingredients.

4. Grout mixes. Include description of type and proportions of ingredients.

5. Reinforcing bars.

6. Joint reinforcement.

7. Anchors, ties, and metal accessories.

F. Mix Designs: For each type of mortar and grout. Include description of type and proportions of ingredients.

1. Include test reports for mortar mixes required to comply with property specification. Test according to ASTM C109/C109M for compressive strength, ASTM C1506 for water retention, and ASTM C91 for air content.

2. Include test reports, according to ASTM C1019, for grout mixes required to comply with compressive strength requirement.

G. Statement of Compressive Strength of Masonry: For each combination of masonry unit type and mortar type, provide statement of average net-area compressive strength of masonry units, mortar type, and resulting net-area compressive strength of masonry determined according to Tables 1 and 2 in ACI 530.1/ASCE 6/TMS 602.

H. Cold-Weather and Hot-Weather Procedures: Detailed description of methods, materials, and equipment to be used to comply with requirements.

1.07 QUALITY ASSURANCE:

A. Comply with the requirements specified in Section 01 40 00.

B. Testing Agency Qualifications: Qualified according to ASTM C1093 for testing indicated.

C. Source Limitations for Masonry Units: Obtain exposed masonry units of a uniform texture and color, or a uniform blend within the ranges accepted for these characteristics, from single source from single manufacturer for each product required.

D. Source Limitations for Mortar Materials: Obtain mortar ingredients of a uniform quality, including color for exposed masonry, from single manufacturer for each cementitious component and from single source or producer for each aggregate.

E. Masonry Standard: Comply with ACI 530.1/ASCE 6/TMS 602 unless modified by requirements in the Contract Documents.

F. Preinstallation Conference: Conduct conference at Project site to comply with requirements in Section 01 31 00 "Project Management and Coordination."

1.08 DELIVERY STORAGE AND HANDLING:

A. Store masonry units on elevated platforms in a dry location. If units are not stored in an enclosed location, cover tops and sides of stacks with waterproof sheeting, securely tied. If units become wet, do not install until they are dry.

B. Store cementitious materials on elevated platforms, under cover, and in a dry location. Do not use cementitious materials that have become damp.

C. Store aggregates where grading and other required characteristics can be maintained and contamination avoided.

D. Deliver preblended, dry mortar mix in moisture-resistant containers designed for use with dispensing silos. Store preblended, dry mortar mix in delivery containers on elevated platforms, under cover, and in a dry location or in covered weatherproof dispensing silos.

E. Store masonry accessories, including metal items, to prevent corrosion and accumulation of dirt and oil.

1.09 PROJECT/SITE CONDITIONS:

A. Protection of Masonry: During construction, cover tops of walls, projections, and sills with waterproof sheeting at end of each day's work. Cover partially completed masonry when construction is not in progress.

1. Extend cover a minimum of 24 inches (600 mm) down both sides of walls and hold cover securely in place.

B. Do not apply loads for at least 12 hours and concentrated loads for at least three days after building masonry walls.

C. Stain Prevention: Prevent grout, mortar, and soil from staining the face of masonry to be left exposed or painted. Immediately remove grout, mortar, and soil that come in contact with such masonry.

1. Protect base of walls from rain-splashed mud and from mortar splatter by spreading coverings on ground and over wall surface.

2. Protect sills, ledges, and projections from mortar droppings.

3. Protect surfaces of window and door frames, as well as similar products with painted and integral finishes, from mortar droppings.

4. Turn scaffold boards near the wall on edge at the end of each day to prevent rain from splashing mortar and dirt onto completed masonry.

D. Cold-Weather Requirements: Do not use frozen materials or materials mixed or coated with ice or frost. Do not build on frozen substrates. Remove and replace unit masonry damaged by frost or by freezing conditions. Comply with cold-weather construction requirements contained in ACI 530.1/ASCE 6/TMS 602.

1. Cold-Weather Cleaning: Use liquid cleaning methods only when air temperature is 40 degrees F and higher and will remain so until masonry has dried, but not less than seven days after completing cleaning.

E. Hot-Weather Requirements: Comply with hot-weather construction requirements contained in ACI 530.1/ASCE 6/TMS 602.

PART 2 - PRODUCTS

2.01 MASONRY UNITS, GENERAL:

A. Defective Units: Referenced masonry unit standards may allow a certain percentage of units to contain chips, cracks, or other defects exceeding limits stated in the standard. Do not use units where such defects will be exposed in the completed Work.

2.02 CONCRETE MASONRY UNITS:

A. Shapes: Provide shapes indicated and as follows, with exposed surfaces matching exposed faces of adjacent units unless otherwise indicated.

1. Provide special shapes for lintels, corners, jambs, sashes, movement joints, headers, bonding, and other special conditions.

2. Provide square-edged units for outside corners unless otherwise indicated.

B. CMUs: ASTM C90.

2. Unit Compressive Strength: Provide units with minimum average net-area compressive strength of 1900 psi.

3. Density Classification: Medium weight.

4. Size (Width): Manufactured to dimensions 3/8 inch less than nominal dimensions.

5. Size (Width): Manufactured to the following dimensions:

a. 8 inch nominal

2.03 MORTAR AND GROUT MATERIALS:

A. Portland Cement: ASTM C150, Type I or II, except Type III may be used for cold-weather construction. Provide natural color cement.

B. Hydrated Lime: ASTM C207, Type S.

C. Portland Cement-Lime Mix: Packaged blend of portland cement and hydrated lime containing no other ingredients.

D. Masonry Cement: ASTM C91.

1. Products:

a. Cemex S.A.B. de C.V.; Type N Masonry Cement

b. Lafarge North America Inc.; Lafarge Masonry Cement.

c. Lehigh Cement Company; Lehigh Masonry Cement.

E. Mortar Cement: ASTM C1329.

1. Products:

a. Lafarge North America Inc.; Lafarge Mortar Cement.

F. Aggregate for Mortar: ASTM C144.

1. For mortar that is exposed to view, use washed aggregate consisting of natural sand or crushed stone.

2. For joints less than 1/4 inch thick, use aggregate graded with 100 percent passing the No. 16 sieve.

G. Aggregate for Grout: ASTM C404.

H. Epoxy Pointing Mortar: ASTM C395, epoxy-resin-based material formulated for use as pointing mortar for structural-clay tile facing units (and approved for such use by manufacturer of units); in color colour indicated or, if not otherwise indicated, as selected by Engineer from manufacturer's colors.

I. Refractory Mortar Mix: Ground fireclay or non-water-soluble, calcium aluminate, medium-duty refractory mortar that passes ASTM C199 test; or an equivalent product acceptable to authorities having jurisdiction.

J. Cold-Weather Admixture: Nonchloride, noncorrosive, accelerating admixture complying with ASTM C494/C494M, Type C, and recommended by manufacturer for use in masonry mortar of composition indicated.

1. Products:

    a. The Euclid Chemical Company; Accelguard 80.

    b. GCP Applied Technologies; Morset.

K. Water: Potable.

2.04 REINFORCEMENT:

A. Uncoated Steel Reinforcing Bars: ASTM A615/A615M.

B. Masonry Joint Reinforcement for Single-Wythe Masonry: Either ladder or truss type with single pair of side rods.

2.05 MISCELLANEOUS ANCHORS:

A. Provide anchorage as indicated in the drawings.

2.06 MISCELLANEOUS MASONRY ACCESSORIES:

A. Compressible Filler: Premolded filler strips complying with ASTM D1056, Grade 2A1; compressible up to 35 percent; of width and thickness indicated; formulated from PVC.

B. Preformed Control-Joint Gaskets: Made from PVC, complying with ASTM D2287, Type PVC-65406 and designed to fit standard sash block and to maintain lateral stability in masonry wall; size and configuration as indicated.

C. Bond-Breaker Strips: Asphalt-saturated, organic roofing felt complying with ASTM D226, Type I (No. 15 asphalt felt).

D. Reinforcing Bar Positioners: Wire units designed to fit into mortar bed joints spanning masonry unit cells and hold reinforcing bars in center of cells. Units are formed from 0.148-inch steel wire, hot-dip galvanized after fabrication. Provide units designed for number of bars indicated.

1. Products:

    a. Hohman & Barnard Company, RB Rebar Positioners

    b. Heckmann Building Products Inc.; No. 376 Rebar Positioner.

    c. Wire-Bond; Corelock Rebar Positioner.

2.07 MASONRY CLEANERS:

A. Proprietary Acidic Cleaner: Manufacturer's standard-strength cleaner designed for removing mortar/grout stains, efflorescence, and other new construction stains from new masonry without discoloring or damaging masonry surfaces. Use product expressly

approved for intended use by cleaner manufacturer and manufacturer of masonry units being cleaned.

1. Manufacturers:

   a. Diedrich Technologies, Inc.

   b. EaCo Chem, Inc.

   c. ProSoCo, Inc.

2.08 MORTAR AND GROUT MIXES:

A. General: Do not use admixtures, including pigments, air-entraining agents, accelerators, retarders, water-repellent agents, antifreeze compounds, or other admixtures, unless otherwise indicated.

   1. Do not use calcium chloride in mortar or grout.

   2. For reinforced masonry, use portland cement-lime mortar.

   3. Add cold-weather admixture (if used) at same rate for all mortar that will be exposed to view, regardless of weather conditions, to ensure that mortar color is consistent.

B. Preblended, Dry Mortar Mix: Furnish dry mortar ingredients in form of a preblended mix. Measure quantities by weight to ensure accurate proportions, and thoroughly blend ingredients before delivering to Project site.

C. Mortar for Unit Masonry: Comply with ASTM C270, Proportion Specification. Provide the following types of mortar for applications stated unless another type is indicated.

   1. For reinforced masonry, use Type S.

D. Grout for Unit Masonry: Comply with ASTM C476.

   1. Proportion grout in accordance with ASTM C476.

   2. Provide grout with a slump of 8 to 11 inches as measured according to ASTM C143/C143M.

PART 3 - EXECUTION

3.01 EXAMINATION:

A. Examine conditions, with Installer present, for compliance with requirements for installation tolerances and other conditions affecting performance of the Work.

1. For the record, prepare written report, endorsed by Installer, listing conditions detrimental to performance of work.

2. Verify that foundations are within tolerances specified.

3. Verify that reinforcing dowels are properly placed.

B. Before installation, examine rough-in and built-in construction for piping systems to verify actual locations of piping connections.

C. Proceed with installation only after unsatisfactory conditions have been corrected.

3.02 INSTALLATION, GENERAL:

A. Thickness: Build single-wythe walls to actual widths of masonry units, using units of widths indicated.

B. Build chases and recesses to accommodate items specified in this and other Sections.

C. Leave openings for equipment to be installed before completing masonry. After installing equipment, complete masonry to match the construction immediately adjacent to opening.

D. Use full-size units without cutting if possible. If cutting is required to provide a continuous pattern or to fit adjoining construction, cut units with motor-driven saws; provide clean, sharp, unchipped edges. Allow units to dry before laying unless wetting of units is specified. Install cut units with cut surfaces and, where possible, cut edges concealed.

E. Select and arrange units for exposed unit masonry to produce a uniform blend of colors and textures.

1. Mix units from several pallets or cubes as they are placed.

F. Wetting of Brick: Wet brick before laying if initial rate of absorption exceeds 30 g/30 sq. in. per minute when tested per ASTM C67. Allow units to absorb water so they are damp but not wet at time of laying.

3.03 TOLERANCES:

A. Dimensions and Locations of Elements:

1. For dimensions in cross section or elevation do not vary by more than plus 1/2-inch or minus 1/4-inch.

2. For location of elements in plan do not vary from that indicated by more than plus or minus 1/2-inch.

3. For location of elements in elevation do not vary from that indicated by more than plus or minus 1/4-inch in a story height or 1/2-inch total.

B. Lines and Levels:

1. For bed joints and top surfaces of bearing walls do not vary from level by more than 1/4 inch in 10 feet, or 1/2 inch maximum.

2. For conspicuous horizontal lines, such as lintels, sills, parapets, and reveals, do not vary from level by more than 1/8 inch in 10 feet (3 mm in 3 m), 1/4 inch in 20 feet, or 1/2 inch maximum.

3. For vertical lines and surfaces do not vary from plumb by more than 1/4 inch in 10 feet, 3/8 inch in 20 feet, or 1/2 inch maximum.

4. For conspicuous vertical lines, such as external corners, door jambs, reveals, and expansion and control joints, do not vary from plumb by more than 1/8 inch in 10 feet, 1/4 inch in 20 feet, or 1/2 inch maximum.

5. For lines and surfaces do not vary from straight by more than 1/4 inch in 10 feet, 3/8 inch in 20 feet, or 1/2 inch maximum.

6. For vertical alignment of exposed head joints, do not vary from plumb by more than 1/4 inch in 10 feet, or 1/2 inch maximum.

7. For faces of adjacent exposed masonry units, do not vary from flush alignment by more than 1/16 inch except due to warpage of masonry units within tolerances specified for warpage of units.

C. Joints:

1. For bed joints, do not vary from thickness indicated by more than +/- 1/8-inch, with a maximum thickness limited to 1/2 inch.

2. For exposed bed joints, do not vary from bed-joint thickness of adjacent courses by more than 1/8 inch.

3. For head and collar joints, do not vary from thickness indicated by more than plus 3/8 inch or minus 1/4 inch.

4. For exposed head joints, do not vary from thickness indicated by more than plus or minus 1/8 inch.

5. For exposed bed joints and head joints of stacked bond, do not vary from a straight line by more than 1/16 inch from one masonry unit to the next.

3.04 LAYING MASONRY WALLS:

A. Lay out walls in advance for accurate spacing of surface bond patterns with uniform joint thicknesses and for accurate location of openings, movement-type joints, returns, and offsets. Avoid using less-than-half-size units, particularly at corners, jambs, and, where possible, at other locations.

B. Bond Pattern for Exposed Masonry: Unless otherwise indicated, lay exposed masonry in running bond; do not use units with less than nominal 4-inch horizontal face dimensions at corners or jambs.

C. Lay concealed masonry with all units in a wythe in running bond or bonded by lapping not less than 4 inches. Bond and interlock each course of each wythe at corners. Do not use units with less than nominal 4-inch horizontal face dimensions at corners or jambs.

D. Stopping and Resuming Work: Stop work by racking back units in each course from those in course below; do not tooth. When resuming work, clean masonry surfaces that are to receive mortar, remove loose masonry units and mortar, and wet brick if required before laying fresh masonry.

E. Built-in Work: As construction progresses, build in items specified in this and other Sections. Fill in solidly with masonry around built-in items.

F. Fill space between steel frames and masonry solidly with mortar unless otherwise indicated.

G. Where built-in items are to be embedded in cores of hollow masonry units, place a layer of metal lath, wire mesh, or plastic mesh in the joint below and rod mortar or grout into core.

H. Fill cores in hollow CMUs with grout 24 inches under bearing plates, beams, lintels, posts, and similar items unless otherwise indicated.

3.05 MORTAR BEDDING AND JOINTING:

A. Lay hollow CMUs as follows:

1. With face shells fully bedded in mortar and with head joints of depth equal to bed joints.

2. With webs fully bedded in mortar in all courses of piers, columns, and pilasters.

3. With webs fully bedded in mortar in grouted masonry, including starting course on footings.

4. With entire units, including areas under cells, fully bedded in mortar at starting course on footings where cells are not grouted.

B. Tool exposed joints slightly concave when thumbprint hard, using a jointer larger than joint thickness unless otherwise indicated.

C. Cut joints flush for masonry walls to receive plaster or other direct-applied finishes (other than paint) unless otherwise indicated.

3.06 MASONRY JOINT REINFORCEMENT:

A. General: Install entire length of longitudinal side rods in mortar with a minimum cover of 5/8 inch on exterior side of walls, 1/2 inch elsewhere. Lap reinforcement a minimum of 6 inches.

1. Space vertical reinforcement not more than 24 inches o.c.

2. Space horizontal reinforcement not more than 40 inches o.c

B. Interrupt joint reinforcement at control and expansion joints unless otherwise indicated.

C. Provide continuity at wall intersections by using prefabricated T-shaped units.

D. Provide continuity at corners by using prefabricated L-shaped units.

E. Cut and bend reinforcing units as directed by manufacturer for continuity at corners**,** returns, offsets, column fireproofing, pipe enclosures, and other special conditions.

3.07 CONTROL AND EXPANSION JOINTS:

A. General: Install control and expansion joint materials in unit masonry as masonry progresses. Do not allow materials to span control and expansion joints without provision to allow for in-plane wall or partition movement.

B. Form control joints in concrete masonry using one of the following methods:

1. Fit bond-breaker strips into hollow contour in ends of CMUs on one side of control joint. Fill resultant core with grout and rake out joints in exposed faces for application of sealant.

2. Install preformed control-joint gaskets designed to fit standard sash block.

3. Install temporary foam-plastic filler in head joints and remove filler when unit masonry is complete for application of sealant.

C. Provide horizontal, pressure-relieving joints by either leaving an air space or inserting a compressible filler of width required for installing sealant and backer rod specified in Division 07 Section "Joint Sealants," but not less than 3/8 inch

1. Locate horizontal, pressure-relieving joints beneath shelf angles supporting masonry.

3.08 FLASHING:

A. General: Install embedded flashing and weep holes in masonry at shelf angles, lintels, ledges, other obstructions to downward flow of water in wall, and where indicated.

B. Install flashing as follows unless otherwise indicated:

1. Prepare masonry surfaces so they are smooth and free from projections that could puncture flashing. Where flashing is within mortar joint, place through-wall flashing on sloping bed of mortar and cover with mortar. Before covering with mortar, seal penetrations in flashing with adhesive, sealant, or tape as recommended by flashing manufacturer.

2. Interlock end joints of ribbed sheet metal flashing by overlapping ribs not less than 1-1/2 inches or as recommended by flashing manufacturer, and seal lap with elastomeric sealant complying with requirements in Division 07 Section "Joint Sealants" for application indicated.

3. Install metal drip edgeswith ribbed sheet metal flashing by interlocking hemmed edges to form hooked seam. Seal seam with elastomeric sealant complying with requirements in Division 07 Section "Joint Sealants" for application indicated.

4. Install metal drip edges beneath flexible flashing at exterior face of wall. Stop flexible flashing 1/2 inch back from outside face of wall and adhere flexible flashing to top of metal drip edge.

5. Install metal flashing termination beneath flexible flashing at exterior face of wall. Stop flexible flashing 1/2 inch back from outside face of wall and adhere flexible flashing to top of metal flashing termination.

6. Cut flexible flashing off flush with face of wall after masonry wall construction is completed.

3.09 REINFORCED UNIT MASONRY INSTALLATION:

A. Temporary Formwork and Shores: Construct formwork and shores as needed to support reinforced masonry elements during construction.

1. Construct formwork to provide shape, line, and dimensions of completed masonry as indicated. Make forms sufficiently tight to prevent leakage of mortar and grout. Brace, tie, and support forms to maintain position and shape during construction and curing of reinforced masonry.

2. Do not remove forms and shores until reinforced masonry members have hardened sufficiently to carry their own weight and other loads that may be placed on them during construction.

B. Placing Reinforcement: Comply with requirements in CI 530.1/ASCE 6/TMS 602.

C. Grouting: Do not place grout until entire height of masonry to be grouted has attained enough strength to resist grout pressure.

1. Comply with requirements in ACI 530.1/ASCE 6/TMS 602 for cleanouts and for grout placement, including minimum grout space and maximum pour height.

2. Limit height of vertical grout pours to not more than 60 inches

3.10 FIELD QUALITY CONTROL:

A. Testing and Inspecting: Contractor will engage special inspectors to perform tests and inspections and prepare reports. Allow inspectors access to scaffolding and work areas, as needed to perform tests and inspections. Retesting of materials that fail to comply with specified requirements shall be done at Contractor's expense.

B. Inspections: Level 2 special inspections according to the "International Building Code."

1. Begin masonry construction only after inspectors have verified proportions of site-prepared mortar.

2. Place grout only after inspectors have verified compliance of grout spaces and of grades, sizes, and locations of reinforcement.

3. Place grout only after inspectors have verified proportions of site-prepared grout.

C. Testing Prior to Construction: One set of tests.

D. Testing Frequency: One set of tests for each 5000 sq. ft. of wall area or portion thereof.

E. Clay Masonry Unit Test: For each type of unit provided, according to ASTM C67 for compressive strength.

F. Concrete Masonry Unit Test: For each type of unit provided, according to ASTM C140 for compressive strength.

G. Mortar Aggregate Ratio Test (Proportion Specification): For each mix provided, according to ASTM C780.

H. Mortar Test (Property Specification): For each mix provided, according to ASTM C780. Test mortar for compressive strength.

I. Grout Test (Compressive Strength): For each mix provided, according to ASTM C1019.

3.11 REPAIRING, POINTING, AND CLEANING:

A. Remove and replace masonry units that are loose, chipped, broken, stained, or otherwise damaged or that do not match adjoining units. Install new units to match adjoining units; install in fresh mortar, pointed to eliminate evidence of replacement.

B. Pointing: During the tooling of joints, enlarge voids and holes, except weep holes, and completely fill with mortar. Point up joints, including corners, openings, and adjacent construction, to provide a neat, uniform appearance. Prepare joints for sealant application, where indicated.

C. In-Progress Cleaning: Clean unit masonry as work progresses by dry brushing to remove mortar fins and smears before tooling joints.

D. Final Cleaning: After mortar is thoroughly set and cured, clean exposed masonry as follows:

1. Remove large mortar particles by hand with wooden paddles and nonmetallic scrape hoes or chisels.

2. Test cleaning methods on sample wall panel; leave one-half of panel uncleaned for comparison purposes. Obtain Engineer's approval of sample cleaning before proceeding with cleaning of masonry.

3. Protect adjacent stone and nonmasonry surfaces from contact with cleaner by covering them with liquid strippable masking agent or polyethylene film and waterproof masking tape.

4. Wet wall surfaces with water before applying cleaners; remove cleaners promptly by rinsing surfaces thoroughly with clear water.

5. Clean brick by bucket-and-brush hand-cleaning method described in BIA Technical Notes 20.

6. Clean masonry with a proprietary acidic cleaner applied according to manufacturer's written instructions.

7. Clean concrete masonry by cleaning method indicated in NCMA TEK 8-2A applicable to type of stain on exposed surfaces.

8. Clean limestone units to comply with recommendations in ILI's "Indiana Limestone Handbook."

3.12 MASONRY WASTE DISPOSAL:

A. Salvageable Materials: Unless otherwise indicated, excess masonry materials are Contractor's property. At completion of unit masonry work, remove from Project site.

B. Excess Masonry Waste: Remove excess clean masonry waste and legally dispose of off Owner's property.

3.13 PROTECTION:

A. Protect the walls, including window sills, with non-staining waterproof coverings when work not in process.

B. Provide minimum 24-inch overhang of protective covering on each side of wall and anchor securely.

C. Protect facing materials from staining.

3.14 CONTRACT CLOSEOUT:

A. Provide in accordance with Section 01 77 00.

END OF SECTION

SECTION 05 12 00

STRUCTURAL STEEL

PART 1 - GENERAL

1.01 DESCRIPTION:

A. The term "Structural Steel" is used as defined in accordance with the AISC Code of Standard Practice.

B. Provide structural steel as specified and as shown on contract drawings.

1.02 REFERENCES:

A. American Institute of Steel Construction (AISC):

1. 303: Code of Standard Practice for Steel Buildings and Bridges

2. 325: Manual of Steel Construction, Fourteenth Edition

3. 326: Structural Steel Detailing Manual

4. 348: Specification for Structural Joints using High Strength Bolts

5. 360-10: Specification for Structural Steel Buildings

B. ASTM International (ASTM):

1. A6/A6M: Specification for General Requirements for Rolled Structural Steel Bars, Plates, Shapes, and Sheet Piling.

2. A36/A36M: Specification for Carbon Structural Steel.

3. A53: Standard Specification for Pipe, Steel, Black and Hot-Dipped, Zinc-Coated, Welded and Seamless

4. A108: Standard Specification for Steel Bars, Carbon and Alloy, Cold-Finished

5. A123: Specification for Zinc (Hot-Dip Galvanized) Coatings on Iron and Steel Products.

6. A143: Practice for Safeguarding Against Embrittlement of Hot-Dip Galvanized Structural Steel Products and Procedures for Detecting Embrittlement.

7. A153: Specification for Zinc Coating (Hot-Dip) on Iron and Steel Hardware.

8.

9. A384: Practice for Safeguarding Against Warpage and Distortion During Hot-Dip Galvanizing of Steel Assemblies.

10. A385: Practice for Providing High Quality Zinc Coatings (Hot-Dip).

11. A449: Specification for Quenched and Tempered Steel Bolts and Studs.

12. A500: Standard Specification for Steel for Cold-Formed Welded and Seamless Carbon Steel Structural Tubing in Rounds and Shapes.

13. A563: Specification for Carbon and Alloy Steel Nuts.

14. A572: Specification for High-Strength Low-Alloy Columbium-Vanadium Structural Steel.

15. A780: Practice for Repair of Damaged and Uncoated Areas of Hot-Dip Galvanized Coatings.

16. A992: Standard Specification for Steel for Structural Shapes for Use in Building Framing.

17. A1008/A1008M: Standard Specification for Steel, Sheet, Cold-Rolled, Carbon, Structural, High-Strength Low-Alloy, High-Strength Low-Alloy with Improved Formability, Solution Hardened, and Bake Hardenable.

18. F436: Specification for Hardened Steel Washers.

19. F1554: Standard Specification for Anchor Bolts, Steel, 36, 55, and 105 ksi Yield.

20. F3125/F3125M REV A: Standard Specification for High Strength Structural Bolts, Steel and Alloy Steel, Heat Treated, 120 ksi (830 MPa) and 150 ksi (1040 MPa) Minimum Tensile Strength, Inch and Metric Dimensions.

C. American Welding Society (AWS):

1. D1.1: Structural Welding Code – Steel

2. D1.3: Structural Welding Code – Sheet Steel

D. Occupational Safety and Health Administration (OSHA):

1. Safety and Health Standards for the Construction Industry, 29 CFR 1926 Subpart R Safety Standards for Steel Erection.

E. Governing Building Code:

1. International Building Code (IBC) 2015.

1.03 DESIGN CRITERIA:

A. Structural Connections: AISC Specification for Structural Steel Buildings. Design connections not fully detailed on the Drawings to resist the loads shown on the Contract Drawings or specified.

B. Where beam end reactions are not shown, design the connection for one-half the total allowable uniform load in kips for beams laterally supported at the given span, as determined by the tables for allowable loads on beams in the AISC Manual of Steel Construction, in addition to any axial loads identified on the Drawings.

C. Unless otherwise noted on Contract Drawings, design connections for ASTM F3125/F3125M REV A Grade A325, Type 1, bolts, bearing-type connection with threads included in shear plane.

1.04 SUBMITTALS:

A. Submit the following shop drawings in accordance with Section 01 3300.

1. Submit in advance of fabrication complete information necessary for the fabrication of each component and part of the structural steel framing. Include the following:

a. Member size and length.

b. Bill of materials.

c. Material specifications.

d. Bolt hole size and bolt size.

e. Cuts, copes, and bevels.

f. Piece marks for field assembly.

g. Detail of each connection or typical connection.

h. Splices.

i. Shop primer paint in accordance with Section 09 90 10.

2. Submit erection drawings showing complete information necessary for the erection of each component part of the structural steel framing. Include the following:

a. Dimensions for alignment and elevations of each member.

b. Location of members and attachments by match-marking of piece numbers.

c. Type and location of each field connection.

d. Detail of each field connection or typical connection.

e. Anchor bolts and setting plans.

3. Do not develop shop drawings by using reproductions of contract drawings. Identify each shop drawing detail by contract drawing detail title.

5. Indicate both shop and field welding and the required nondestructive testing by welding symbols and nondestructive testing symbols as shown in the latest edition of AWS A2.4.

   a. Fully explain special conditions with notes or details.

   b. Welding symbols for groove welds shall indicate the groove depth required to obtain the specified effective throat thickness for the welding process and position of welding to be used.

   c. The details of groove welds, joints, and preparation of base material shall be referenced to prequalified joints specified in AWS Figures 3.2 through 3.11 and shall clearly distinguish between complete joint penetration and partial joint penetration.

   d. Fillet weld symbols shall indicate required weld size to obtain the specified effective throat thickness and effective length. For fillet weld lengths not specified provide a continuous weld. When fillet weld size is not indicated, provide maximum weld size based on connecting material thicknesses in accordance with AISC specifications.

6. Welding Procedures: Prepare written welding procedures for both shop and field welds, which are deemed prequalified in accordance with AWS Code Section 3, and make the procedures available to the testing agency at the fabricator's plant. Prior to use of submit other for review procedures along with tests required to qualify the procedure in accordance with AWS Code Section 3.2.3.

7. Submit sequence-of-welding outline.

8. Submittals for Evidence of Conformity to Specifications: Certified mill test reports containing results of chemical and mechanical test as specified by ASTM A6 for the following material:

   a. Structural steel shapes.

   b. Structural steel bars.

   c. Structural steel plates.

   In addition to the certified mill test reports, the fabricator shall provide an affidavit stating that the structural steel furnished meets the requirements of ASTM

specification for the grade furnished. Test any of the members not represented by certified mill test reports by the testing laboratory in accordance with ASTM specification for chemical and physical properties. The contractor is responsible for the cost of sampling and testing.

9. Submit manufacturer's certification and test data that the following items furnished conform to the following specifications:

   a. High-strength bolts including nuts and washers. Provide Connection type N per the AISC handbook unless otherwise noted in the drawings.

10. Proposed Substitutions: Submit for review in sketch form prior to submittal of shop drawings substitutions of members or modifications of details, if proposed by the Contractor. Submit in sketch form for review corrections for inaccuracy that result in a change from the structural drawing or final shop drawing details. Make such substitutions or corrections only when permitted by the Engineer.

11. Qualification test reports bearing witness certification by an independent testing laboratory for each welder, welding operator and tacker to be employed in the work.

1.05 QUALITY ASSURANCE:

A. Comply with the requirements specified in Section 01 40 00.

B. Test and inspect structural steel in accordance with IBC.

C. Provide structural steel in accordance with AISC Standard for Structural Steel Buildings and the Code of Standard Practice for Steel Buildings and Bridges, unless otherwise specified herein.

D. Design connections not detailed on the Drawings under direct supervision of a Professional Engineer experienced in design of this work and licensed in the State where the Project is located.

E. Use connections shown or, if not shown, select connections to support half the AISC maximum uniform load for the indicated beam size and span.

F. Steel fabricator shall have 5 years' experience minimum in structural steel fabrications.

G. Steel erector shall have 5 years' experience minimum in structural steel erection.

H. Welding Qualification and Certification:

1. Furnish written welding procedure for welds in conformance with the AWS D 1.1.

2. Each welder, welding operator and tack welder shall be certified by test to perform type of work required in conformance with AWS D 1.1 and AWS D1.3 for Sheet Steel.

3. If a welder or welding operator has not been engaged in a specific welding process for a period of six months or more, that individual shall be deemed unqualified and shall not perform work on the project until the individual has been qualified again by testing in conformance with AWS D 1.1 and AWS D1.3 for Sheet Steel.

4. Maintain duplicate qualification and certification records at the job site readily available for examination.

I. Tolerances:

1. Maintain tolerances conforming to AISC Code of Standard Practice.

2. Permissible variation tolerances conforming to ASTM A6.

J. Tension Calibrator:

1. Provide certification by an independent testing laboratory confirming the accuracy of the tension-measuring device when slip-critical connections and connections subject to direct tension are being used. Confirm accuracy not more than 30 days prior to use on project and at intervals not more than six months thereafter.

2. Provide tension calibrator measuring device at the job site when high-strength bolts in slip-critical connections and connections subject to direct tension are being installed and tightened.

3. Conform to the AISC Specification for Structural Joints for frequency and of number confirmation tests to be performed and the test procedure.

4. Return tension calibrator measuring device to the independent testing laboratory for certification if Engineer questions its accuracy.

1.06 DELIVERY, STORAGE AND HANDLING:

A. Load structural members in such a manner that they may be transported and unloaded without being over-stressed, deformed or otherwise damaged.

B. Protect structural steel members and packaged materials from corrosion and deterioration. Store material in a dry area.

C. Support materials stored outdoors above ground surfaces on wood runners and protected with acceptable effective and durable covers.

D. Do not place materials on the structure in a manner that might cause distortion or damage to the members or the supporting structures. Repair or replace damaged materials or structures as recommended by the Engineer.

1.07 FIELD MEASUREMENTS:

A. Verify dimensions and make any field measurements necessary and be fully responsible for accuracy and layout of the work.

B. Review the Contract Drawings and report any discrepancies to the Engineer for clarification prior to starting fabrication.

PART 2 - PRODUCTS

2.01 STRUCTURAL STEEL:

A. W shapes in conformance with ASTM A992 unless otherwise indicated or specified.

B. C, M, S and HP shapes in conformance with ASTM A572, Grade 50, unless otherwise specified or shown on contract drawings.

C. Angles, plates and bars in conformance with ASTM A36.

D. Round, square and rectangular structural tube members (HSS) in conformance with ASTM A500, Grade B.

E. Steel pipe in conformance with ASTM A53, Grade B.

F. Sheet Steel in conformance with ASTM A1008, Grade 33.

2.02 FASTENERS:

A. Carbon Steel Bolts, Nuts and Washers: ASTM A307, Grade A.

B. High-strength fasteners in conformance with ASTM F3125/F3125M REV A Grade A325, Type 1.

C. Nuts and washers ASTM A563 and F 436.

D. Hot-dip Galvanized Bolts, nuts and washers in conformance with ASTM A153.

2.03 ANCHOR BOLTS:

A. Steel anchor bolts in conformance with ASTM F1554, grade55.

2.04 WELDING:

A. Class E70XX electrodes.

B. Provide equipment for welding, electrodes, welding wire and fluxes capable of producing indicated welds when used by certified welders under AWS welding procedures. Provide welding materials that comply with requirements of AWS Structural Welding Code.

2.05 SHOP FABRICATION:

A. Fabricate each element and connection as indicated on the fabrication shop drawings accepted by the Engineer. Fabricate and shop assemble work to the greatest extent practical in conformance with following publications:

1. AISC Manual of Steel Construction

2. AISC Specification for Structural Joints

3. AISC Detailing Manual

4. AWS Structural Welding Code

2.06 CONNECTIONS:

A. Connect members with ASTM F3125/F3125M REV A Grade A325, Type 1, high strength bolts unless otherwise specified or shown on contract drawings. Provide clean-cut holes without torn or ragged edges and remove outside burrs.

B. Provide high-strength bolted construction assembly in accordance with AISC Specifications for Structural Joints. Bolted parts shall fit solidly together when assembled and shall not be separated by gaskets or any other interposed compressible material. Free joint surfaces burrs and foreign materials. Score hot-dipped galvanized contact surfaces with a wire brush or blasted prior to assembly. Grinding of surfaces is not permitted. If the thickness of the material is not greater than the normal diameter of the bolt plus 1/8 inch, the holes may be punched. If the thickness of the material is greater than the normal diameter of the bolt plus 1/8 inch, drill it full size or subpunched 1/16 inch smaller than the bolt diameter and reamed to full size. Provide holes for work to be secured to structural steel framing and for the passage of work through steel framing members. Provide threaded nuts, threaded units, or other items welded to framing, which receive other work. Provide normal bolt hole diameters not more than 1/16 inch in excess of the normal bolt diameter unless otherwise specified in contract drawings. Provide required slotted or oversize bolt holes as specified in the AISC Specification for Structural Joints Section 3.3. Tighten each bolt to provide the minimum tension shown in Table 8.1 of AISC Specification for Structural Joints for the size and grade of bolts used. Tighten bolts in accordance with the manufacturer's specifications.

D. Provide full cross section bearing on milled ends of columns and bearing stiffeners.

E. Welded Connections:

1. Weld connections indicated or specified.

F. Make connections with ASTM A307 carbon steel bolts when specified or shown in contract drawings.

G. Provide anchor rods with washer and heavy hex nuts.

2.07 SHOP PAINTING:

A. Apply shop prime coat to structural steel, except to members or portions of members to be embedded in concrete and edges to be field welded. Provide surface preparation as described for the specified coating system.

B. Remove all pencil, painted, etc. marks on structural steel prior to applying primer coat.

C. Immediately after surface preparation, apply primer as specified in Section 09 90 10. Use painting methods that will result in full coverage of joints, corners, edges, and exposed surfaces.

PART 3 - EXECUTION

3.01 ERECTION OF STRUCTURAL STEEL:

A. Conform to the IBC 2015 and referenced AISC standards. Brace and secure work until permanent connections are completed. Provide accessories and fasteners to secure the work in place whether or not shown or specified. Comply with OSHA requirements.

B. Erect structural steel with qualified, experienced personnel. Plan and lay out steel to require minimum of cutting. Erect work plumb, square, and true to line and level and in precise positions. Provide temporary bracing and guys to counteract loads and stresses to which structure may be subjected, including those due to erection equipment and its operation. Do not encumber premises with material or equipment.

D. Splice members only where shown or specified. On exposed welded connections, remove erection bolts, fill holes with plug welds, and grind smooth at exposed surfaces. Comply with AISC specifications for bearing, adequacy of temporary connections, alignment, and the removal of paint on surfaces adjacent to field welds. Do not enlarge holes in members by burning or the use of drift pins, except in secondary bracing members. Ream holes that must be enlarged to place bolts. Do not use gas-cutting torches in the field for correcting fabrication errors in the structural framing.

E. Erect, plumb, level, and align each individual member within the tolerance defined in Section 7 and Commentary of the AISC Code of Standard Practice, allowing for weld shrinkage during erection for assurance that the end product is within specified tolerance. Establish and maintain the building line for use in plumbing the exterior columns.

3.02 DAMAGED MEMBERS:

A. During erection, straighten or replace members that are bent, twisted, or damaged. If heating is required in straightening, perform heating by methods that ensure uniform temperature throughout entire member. When required by the Engineer, remove members that are impaired strength and replace with new members at no additional cost to Owner.

3.03 MISFITS AT BOLTED CONNECTIONS:

A. Immediately notify the Engineer where misfits in erection bolting are encountered. Then submit a method to remedy the misfit for review by the Engineer. The Engineer will determine whether the remedy is acceptable or if the member must be refabricated.

B. Do not enlarge incorrectly sized or misaligned holes in members by burning or by the use of drift pins. Notify the Engineer immediately and submit a proposed method of remedy for review by the Engineer.

3.04 ANCHOR BOLTS:

A. Install anchor bolts by using templates, setting drawings, and instructions provided by the fabricator. Verify positions of bolts prior to delivery of steel; report errors or deviation for adjustment. After anchor bolts have been embedded, protect threads by applying grease and by having the nuts screwed on until the metalwork is installed.

3.05 COLUMN BASEPLATES AND BEARING PLATES:

A. Set columns with base plates attached and bearing plates for beams and similar structural members to their proper alignment and elevation using shim packs. Set loose column bases level to their proper alignment and elevation by use of shim packs, leveling nuts, or as shown in the contract drawings. Tighten anchor bolts after members have been positioned and plumbed. Do not remove protruding wedges, shims, or other leveling devices but cut off flush with the baseplate prior to packing with non-shrink grout.

3.06 CONNECTIONS:

A. Securely bolt members to maintain steel in position during field welding and final bolting and accommodate dead loads, wind, and erection stresses.

B. Tighten high-strength bolted connections in accordance with AISC Specification for Structural Joints using ASTM F3125/F3125M REV A with Grade A325 Bolts and manufacturer's specifications.

C. Perform shop-welded construction in accordance with AWS D1.1 Sections 2 through 6, whichever is applicable. Use only welded joints deemed as being prequalified in accordance with AWS Code Section 4, which are selected from AWS Code Figures 3.2 through 3.11.

D. Common Bolts: Tighten ASTM A307 and nonslip critical bolts to snug tight plus one-quarter turn with upset bolt threads to preclude loosening or use self-locking nuts.

3.07 FIELD PAINTING:

A. All painting in the field shall be as specified in Section 09 90 10. Use painting methods that will result in full coverage of joints, corners, edges, and exposed surfaces.

B. Field welded connections shall be painted with the first primer coat as specified in Section 09 90 10 within four (4) hours after welding.

3.08 CLEAN-UP:

A. Upon completion of the work, remove surplus materials, rubbish, and debris resulting from the operations, including disused equipment and implements of service, and leave the entire structure and site, insofar as the work of this section is concerned, in a neat, clean condition.

3.10 CLOSEOUT ACTIVITIES:

A. Provide in accordance with Section 01 77 00

END OF SECTION

SECTION 05 31 00

STEEL DECK

PART 1 GENERAL

1.01 RELATED DOCUMENTS

A. Drawings and general provisions of the Contract, including General and Supplementary Conditions and Division 1 Specification Sections, apply to this Section.

1.02 SUMMARY

A. This Section includes the following:

1. Steel floor deck.

1.03 SUBMITTALS

A. Submit the following shop drawings in accordance with Section 01 33 00.

1. Product data for each type of deck, accessory, and product specified.

2. Shop drawings showing layout and types of deck panels, anchorage details, reinforcing channels, pans, deck openings, special jointing, accessories, and attachments to other construction.

3. Product certificates signed by manufacturers of steel deck certifying that their products comply with specified requirements.

4. Welder certificates signed by Contractor certifying that welders comply with requirements specified under the "Quality Assurance" Article.

5. Product test reports from qualified independent testing agencies evidencing compliance with requirements of the following based on comprehensive testing:

1. Mechanical fasteners.

6. Research reports or evaluation reports of the model code organization acceptable to authorities having jurisdiction that evidence steel deck's compliance with the building code in effect for the Project.

1.04 QUALITY ASSURANCE

A. Installer Qualifications: Engage an experienced Installer who has completed steel deck similar in material, design, and extent to that indicated for this Project and with a record of successful in-service performance.

B. Testing Agency Qualifications: To qualify for acceptance, an independent testing agency must demonstrate to Engineer's satisfaction, based on evaluation of agency-submitted criteria conforming to ASTM E 699, that it has the experience and capability to satisfactorily conduct the testing indicated without delaying the Work. Testing Agency to by hired by the Contractor at no cost to the Owner.

C. Welding Standards: Comply with applicable provisions of AWS D1.1 "Structural Welding Code--Steel" and AWS D1.3 "Structural Welding Code--Sheet Steel."

1. Certify that each welder has satisfactorily passed AWS qualification tests for welding processes involved and, if pertinent, has undergone recertification.

D. Steel deck shall comply with the specifications and tolerances of the Steel Deck Institute.

E. Replace or repair damaged galvanized material as directed by the Engineer at no additional cost to the Owner.

1.05 DELIVERY, STORAGE, AND HANDLING

A. Protect steel deck from corrosion, deformation, and other damage during delivery, storage, and handling.

A. Use care during loading, transportation and unloading to prevent damage and injury to ends, sides and faces of panels.

B. Use nylon slings or padded cables for handling steel deck. Do not drop or drag materials.

C. Store steel deck and accessories off ground on platform or skid supports and protect from snow, rain and ground spatter.

1.08 USE OF DECK DURING ERECTION:

D. Do not use steel deck for storage or working platforms until permanently secured in position.

E. Do not allow construction loads to exceed carrying capacity of deck.

PART 2 PRODUCTS

2.01 MATERIALS:

A. Provide steel deck, ridge plates, valley plates, closures, flashing and sump pans manufactured from galvanized steel sheet conforming to the requirements of ASTM A 653, structural quality, with a minimum yield stress of 33,000 psi.

B. Decking thickness shall be as indicated, but not less than 22 gage 0.031 inches.

C. Ridge plates, valley plates, flat plates at changes in deck direction, closures, accessories and flashings: 18 gage.

D. Flexible Cell Closures: Rubber, manufacturer's standard.

E. Concrete: 3,000 psi at 28 days conforming to Section 03 30 00, Cast-In-Place Concrete.

2.02 FABRICATION:

A. Fabricate steel deck units in three span lengths or longer, except where one or two span lengths are necessitated due to interruptions at roof or floor openings. Lap ends of units a minimum of 2 inches. Laps shall be made over supports.

2.03 MANUFACTURERS

A. Available Manufacturers: Subject to compliance with requirements, manufacturers offering products that may be incorporated in the Work include, but are not limited to, the following:

1. United Steel Deck, Inc.

2. Vulcraft Div. of Nucor Corp.

3. Wheeling Corrugating Co., Div. of Wheeling-Pittsburgh Steel Corp.

2.04 FLOOR DECK

A. Composite Steel Floor Deck: Fabricate ribbed-steel sheet non-composite form deck panels conforming to SDI Publication No. 28 "Specifications and Commentary for Non-composite Steel Form Deck," the minimum section properties indicated, and the following:
   1. Galvanized Steel Sheet: ASTM A 653
   2. Deck Profile: 0.6C22
   3. Design Galvanized Steel Thickness: 22 GAGE.
   4. Side Joints: Overlapped

5. Structural properties: Ip = 0.024 in^4, In = 0.024 in^4, Sp=0.070 in^3, Sn=0.070 in^3.

2.05 ACCESSORIES

A. General: Provide accessory materials for steel deck that comply with requirements indicated and recommendations of the steel deck manufacturer.

B. Mechanical Fasteners: Manufacturer's standard, corrosion-resistant, low-velocity, powder-actuated or pneumatically driven carbon steel fasteners; or self-drilling, self-threading screws.

C. Side Lap Fasteners: Manufacturer's standard, corrosion-resistant, hexagonal washer head; self-drilling, carbon steel screws, No. 10 (4.8 mm) minimum diameter.

D. Rib Closure Strips: Manufacturer's standard vulcanized, closed-cell, synthetic rubber.

E. Miscellaneous Roof Deck Accessories: Steel sheet, 0.0359-inch thick minimum ridge and valley plates, finish strips, and reinforcing channels, of same material as roof deck.

F. Pour Stops and Girder Fillers: Steel sheet, of same material as deck panels, and of thickness and profile indicated.

G. Column Closures, End Closures, Z-Closures, and Cover Plates: Steel sheet, of same material and thickness as deck panels, unless otherwise indicated.

H. Hanger Tabs: Manufacturer's standard piercing steel sheet hanger attachment devices for floor deck panels.

I. Steel Sheet Accessories: ASTM A 446, G 60 (ASTM A 446M, Z 180) coating class, galvanized according to ASTM A 525 (ASTM A 525M).

J. Galvanizing Repair Paint: SSPC-Paint 20 or DOD-P-21035, with dry film containing a minimum of 94 percent zinc dust by weight.

K. Preset Inserts: Manufacturer's standard, UL-labeled single-piece preset inserts, fabricated from either steel sheet galvanized according to ASTM A 525, G 60 (ASTM A 525M, Z 180) coating class, or zinc sheet, with removable covers.

PART 3 EXECUTION

3.01 EXAMINATION

A. Examine supporting framing and field conditions for compliance with requirements for installation tolerances and other conditions affecting performance of steel deck.

3.02 PREPARATION

A. Check all supporting elements for correct layout and alignment. Correct any deficiencies as required before securing deck units.

B. Locate decking bundles to prevent overloading of supporting members.

C. Remove debris from all surfaces to support steel deck.

3.03 INSTALLATION, GENERAL

A. Install deck panels and accessories in conformance with Steel Deck Institute specifications, the Steel Deck Institute Manual of Construction with Steel Deck, in accordance with placement plans, and as indicated and specified

B. Install temporary shoring before placing deck panels when required to meet deflection limitations.

C. Place deck panels on supporting framing and adjust to final position with ends accurately aligned and bearing on supporting framing before being permanently fastened. Do not stretch or contract side lap interlocks.

D. Place deck panels flat and square and fasten to supporting framing without warp or deflection.

E. Cut and neatly fit deck panels and accessories around openings and other work projecting through or adjacent to the decking.

F. Provide additional reinforcement and closure pieces at openings as required for strength, continuity of decking, and support of other work.

G. Comply with AWS requirements and procedures for manual shielded metal arc welding, appearance and quality of welds, and methods used in correcting welding work.

H. Mechanical fasteners may be used in lieu of welding to fasten deck. Locate mechanical fasteners and install according to deck manufacturer's instructions.

3.04 CONCRETE PLACEMENT:

A. Install temporary shoring as recommended by the deck manufacturer before concrete placement.
B. Place reinforcing steel or welded wire fabric and secure in place.

C. Place concrete in a uniform manner over the supporting structure and spread toward the center of the deck spans.

D. Place concrete from a low level to avoid impact load on deck.

E. Provide plank runways if concrete buggies are used. Do not operate buggies directly on decking.

F. Do not remove temporary shoring until concrete has attained 75 percent of its design strength.

3.05 FIELD QUALITY CONTROL

A. Testing Agency: A qualified independent testing agency employed and paid by Contractor will perform field quality-control testing.

B. Field welds will be subject to inspection.

C. Testing agency will report test results promptly and in writing to Owner, Contractor, and Architect/Engineer.

D. Remove and replace work that does not comply with specified requirements.

E. Additional testing will be performed to determine compliance of corrected work with specified requirements.

3.06 REPAIRS AND PROTECTION

A. Galvanizing Repairs: Prepare and repair damaged galvanized coatings on both surfaces with galvanized repair paint according to ASTM A 780 and the manufacturer's instructions.

B. Touchup Painting: Wire brush, clean, and paint scarred areas, welds, and rust spots on both surfaces of installed deck panels.

END OF SECTION

SECTION 05 40 00

COLD-FORMED METAL FRAMING

PART 1 - GENERAL

1.01 RELATED DOCUMENTS

A. Drawings and general provisions of the Contract, including Supplemental General Conditions and Division 01 Specification Sections, apply to this Section.

1.02 SUMMARY

A. Section Includes:

1. Exterior non-load-bearing wall framing.
2. Interior non-load-bearing wall framing exceeding height limitations of standard, nonstructural metal framing.

B. Related Requirements:

1. Section 05 50 00 "Metal Fabrications" for miscellaneous steel shapes, masonry shelf angles, and connections used with cold-formed metal framing.

1.03 ACTION SUBMITTALS

A. Product Data: For each type of product.

B. Shop Drawings:

1. Include layout, spacings, sizes, thicknesses, and types of cold-formed steel framing; fabrication; and fastening and anchorage details, including mechanical fasteners.
2. Indicate reinforcing channels, opening framing, supplemental framing, strapping, bracing, bridging, splices, accessories, connection details, and attachment to adjoining work.

1.04 INFORMATIONAL SUBMITTALS

A. Qualification Data: For testing agency.

B. Welding certificates.

C. Product Certificates: For each type of code-compliance certification for studs and tracks.

D. Product Test Reports: For each listed product, for tests performed by a qualified testing agency.

1. Steel sheet.
2. Expansion anchors.
3. Power-actuated anchors.
4. Mechanical fasteners.
5. Vertical deflection clips.
6. Horizontal drift deflection clips
7. Miscellaneous structural clips and accessories.

E. Evaluation Reports: For nonstandard cold-formed steel framing, post-installed anchors and power-actuated fasteners, from ICC-ES or other qualified testing agency acceptable to authorities having jurisdiction.

1.05 QUALITY ASSURANCE

A. Product Tests: Mill certificates or data from a qualified independent testing agency indicating steel sheet complies with requirements, including base-metal thickness, yield strength, tensile strength, total elongation, chemical requirements, and metallic-coating thickness.

B. Code-Compliance Certification of Studs and Tracks: Provide documentation that framing members are certified according to the product-certification program of the Certified Steel Stud Association, the Steel Framing Industry Association, or the Steel Stud Manufacturers Association.

PART 2 - PRODUCTS

2.01 MANUFACTURERS

A. ClarkDietrich Building Systems

B. MarinoWARE

C. Nuconsteel, A Nucor Company

D. Or approved equal.

2.02 PERFORMANCE REQUIREMENTS

A. Structural Performance: Provide cold-formed steel framing capable of withstanding design loads within limits and under conditions indicated.

1. Design Loads: As indicated on Drawings.

2. Deflection Limits: Design framing systems to withstand design loads without deflections greater than the following:

    a. Exterior Non-Load-Bearing Framing: Horizontal deflection of 1/240 of the wall height.
    b. Interior Non-Load-Bearing Framing: Horizontal deflection of 1/360 of the wall height under a horizontal load of 5 lbf/sq. ft.

3. Design framing systems to provide for movement of framing members located outside the insulated building envelope without damage or overstressing, sheathing failure, connection failure, undue strain on fasteners and anchors, or other detrimental effects when subject to a maximum ambient temperature change of 120 deg F.
4. Design framing system to maintain clearances at openings, to allow for construction tolerances, and to accommodate live load deflection of primary building structure as follows:

    a. Upward and downward movement of 1 inch.

5. Design exterior non-load-bearing wall framing to accommodate horizontal deflection without regard for contribution of sheathing materials.

B. Cold-Formed Steel Framing Standards: Unless more stringent requirements are indicated, framing shall comply with AISI S100, AISI S200, and the following:

1. Wall Studs: AISI S211.
2. Headers: AISI S212.
3. Lateral Design: AISI S213.

C. Fire-Resistance Ratings: Comply with ASTM E 119; testing by a qualified testing agency. Identify products with appropriate markings of applicable testing agency.

1. Indicate design designations from UL's "Fire Resistance Directory" or from the listings of another qualified testing agency acceptable to authorities having jurisdiction.

2.03 COLD-FORMED STEEL FRAMING MATERIALS

A. Steel Sheet: ASTM A 1003/A1003M, Structural Grade, Type H, metallic coated, of grade and coating designation as follows:

1. Grade: ST33H or as required by structural performance.
2. Coating: G60.

B. Steel Sheet for Vertical Deflection Clips: ASTM A 653/A 653M, structural steel, zinc coated, of grade and coating as follows:

1. Grade: 33, Class 1.
2. Coating: G60.

2.04 EXTERIOR NON-LOAD-BEARING WALL FRAMING

A. Steel Studs: Manufacturer's standard C-shaped steel studs, of web depths indicated, punched, with stiffened flanges, and as follows:

1. Minimum Base-Metal Thickness: 0.0329 inch.
2. Flange Width: 1-5/8 inches.

B. Steel Track: Manufacturer's standard U-shaped steel track, of web depths indicated, unpunched, with unstiffened flanges, and as follows:

1. Minimum Base-Metal Thickness: 0.0329 inch.
2. Flange Width: 1-1/4 inches.

C. Single Deflection Track: Manufacturer's single, deep-leg, U-shaped steel track; unpunched, with unstiffened flanges, of web depth to contain studs while allowing free vertical movement, with flanges designed to support horizontal loads and transfer them to the primary structure, and as follows:

1. Minimum Base-Metal Thickness: 0.0428 inch.
2. Flange Width: 1 inch.

D. Drift Clips: Manufacturer's standard bypass or head clips, capable of isolating wall stud from upward and downward vertical displacement and lateral drift of primary structure through positive mechanical attachment to stud web and structure.

2.05 INTERIOR NON-LOAD-BEARING WALL FRAMING

A. Steel Studs: Manufacturer's standard C-shaped steel studs, of web depths indicated, punched, with stiffened flanges, and as follows:

1. Minimum Base-Metal Thickness: 0.0329 inch.
2. Flange Width: 1-5/8 inches.

B. Steel Track: Manufacturer's standard U-shaped steel track, of web depths indicated, unpunched, with unstiffened flanges, and as follows:

1. Minimum Base-Metal Thickness: 0.0329 inch.
2. Flange Width: 1-1/4 inches.

C. Single Deflection Track: Manufacturer's single, deep-leg, U-shaped steel track; unpunched, with unstiffened flanges, of web depth to contain studs while allowing free vertical movement, with flanges designed to support horizontal loads and transfer them to the primary structure, and as follows:

1. Minimum Base-Metal Thickness: 0.0428 inch.
2. Flange Width: 1 inch.

2.06 FRAMING ACCESSORIES

A. Fabricate steel-framing accessories from ASTM A1003/A1003M, Structural Grade, Type H, metallic coated steel sheet, of same grade and coating designation used for framing members.

B. Provide accessories of manufacturer's standard thickness and configuration, unless otherwise indicated, as follows:

1. Supplementary framing.
2. Bracing, bridging, and solid blocking.
3. Web stiffeners.
4. Anchor clips.
5. End clips.
6. Foundation clips.
7. Gusset plates.
8. Stud kickers and knee braces.
9. Hole-reinforcing plates.
10. Backer plates.

2.07 ANCHORS, CLIPS, AND FASTENERS

A. Steel Shapes and Clips: ASTM A 36/A 36M, zinc coated by hot-dip process according to ASTM A 123/A 123M.

B. Anchor Bolts: ASTM F 1554, Grade 36, threaded carbon-steel hex-headed bolts, carbon-steel nuts, and flat, hardened-steel washers.

C. Post-Installed Anchors: Fastener systems with bolts of same basic metal as fastened metal, if visible, unless otherwise indicated; with working capacity greater than or equal to the design load, according to an evaluation report acceptable to authorities having jurisdiction, based on ICC-ES AC193 or ICC-ES AC308 as appropriate for the substrate.

1. Uses: Securing cold-formed steel framing to structure.
2. Material for Interior Locations: Carbon-steel components zinc plated to comply with ASTM B 633 or ASTM F 1941, Class Fe/Zn 5, unless otherwise indicated.

D. Power-Actuated Anchors: Fastener systems with working capacity greater than or equal to the design load, according to an evaluation report acceptable to authorities having jurisdiction, based on ICC-ES AC70.

E. Mechanical Fasteners: ASTM C 1513, corrosion-resistant-coated, self-drilling, self-tapping, steel drill screws.

1. Head Type: Low-profile head beneath sheathing; manufacturer's standard elsewhere.

F. Welding Electrodes: Comply with AWS standards.

2.08 MISCELLANEOUS MATERIALS

A. Galvanizing Repair Paint: ASTM A 780/A 780M.

B. Cement Grout: Portland cement, ASTM C 150/C 150M, Type I; and clean, natural sand, ASTM C 404. Mix at ratio of 1-part cement to 2-1/2 parts sand, by volume, with minimum water required for placement and hydration.

C. Nonmetallic, Nonshrink Grout: Factory-packaged, nonmetallic, noncorrosive, nonstaining grout, complying with ASTM C 1107/C 1107M, and with a fluid consistency and 30-minute working time.

D. Shims: Load-bearing, high-density, multimonomer, nonleaching plastic; or cold-formed steel of same grade and metallic coating as framing members supported by shims.

E. Sealer Gaskets: Closed-cell neoprene foam, 1/4-inch-thick, selected from manufacturer's standard widths to match width of bottom track or rim track members as required.

2.09 FABRICATION

A. Fabricate cold-formed steel framing and accessories plumb, square, and true to line, and with connections securely fastened, according to referenced AISI's specifications and standards, manufacturer's written instructions, and requirements in this Section.

1. Fabricate framing assemblies using jigs or templates.
2. Cut framing members by sawing or shearing; do not torch cut.
3. Fasten cold-formed steel framing members by welding, screw fastening, clinch fastening, pneumatic pin fastening, or riveting as standard with fabricator. Wire tying of framing members is not permitted.

    a. Comply with AWS D1.3/D1.3M requirements and procedures for welding, appearance and quality of welds, and methods used in correcting welding work.
    b. Locate mechanical fasteners and install according to Shop Drawings, with screws penetrating joined members by no fewer than three exposed screw threads.

4. Fasten other materials to cold-formed steel framing by welding, bolting, pneumatic pin fastening, or screw fastening, according to Shop Drawings.

B. Reinforce, stiffen, and brace framing assemblies to withstand handling, delivery, and erection stresses. Lift fabricated assemblies by means that prevent damage or permanent distortion.

C. Tolerances: Fabricate assemblies level, plumb, and true to line to a maximum allowable variation of 1/8 inch in 10 feet and as follows:

1. Spacing: Space individual framing members no more than plus or minus 1/8 inch from plan location. Cumulative error shall not exceed minimum fastening requirements of sheathing or other finishing materials.
2. Squareness: Fabricate each cold-formed steel framing assembly to a maximum out-of-square tolerance of 1/8 inch.

PART 3 - EXECUTION

3.01 EXAMINATION

A. Examine substrates, areas, conditions, and abutting structural framing for compliance with requirements for installation tolerances and other conditions affecting performance of the Work.

B. Proceed with installation only after unsatisfactory conditions have been corrected.

3.02 INSTALLATION, GENERAL

A. Cold-formed steel framing may be shop or field fabricated for installation, or it may be field assembled.

B. Install cold-formed steel framing according to AISI S200, AISI S202, and manufacturer's written instructions unless more stringent requirements are indicated.

C. Install shop- or field-fabricated, cold-formed framing and securely anchor to supporting structure.

1. Screw, bolt, or weld wall panels at horizontal and vertical junctures to produce flush, even, true-to-line joints with maximum variation in plane and true position between fabricated panels not exceeding 1/16 inch.

D. Install cold-formed steel framing and accessories plumb, square, and true to line, and with connections securely fastened.

1. Cut framing members by sawing or shearing; do not torch cut.
2. Fasten cold-formed steel framing members by welding, screw fastening, clinch fastening, or riveting. Wire tying of framing members is not permitted.

a. Comply with AWS D1.3/D1.3M requirements and procedures for welding, appearance and quality of welds, and methods used in correcting welding work.
b. Locate mechanical fasteners, install according to Shop Drawings, and comply with requirements for spacing, edge distances, and screw penetration.

E. Install framing members in one-piece lengths unless splice connections are indicated for track or tension members.

F. Install temporary bracing and supports to secure framing and support loads equal to those for which structure was designed. Maintain braces and supports in place, undisturbed, until entire integrated supporting structure has been completed and permanent connections to framing are secured.

G. Install insulation, specified in Section 07 21 00 "Thermal Insulation," in framing-assembly members, such as headers, sills, boxed joists, and multiple studs at openings, that are inaccessible on completion of framing work.

H. Fasten hole-reinforcing plate over web penetrations that exceed size of manufacturer's approved or standard punched openings.

3.03 EXTERIOR NON-LOAD-BEARING WALL INSTALLATION

A. Install continuous tracks sized to match studs. Align tracks accurately and securely anchor to supporting structure.

B. Fasten both flanges of studs to bottom track unless otherwise indicated. Space studs as follows:

1. Stud Spacing: As indicated on Drawings or 16 inches on center maximum.

C. Set studs plumb, except as needed for diagonal bracing or required for nonplumb walls or warped surfaces and similar requirements.

D. Isolate non-load-bearing steel framing from building structure to prevent transfer of vertical loads while providing lateral support.

1. Install single deep-leg deflection tracks and anchor to building structure.
2. Connect drift clips to cold-formed steel framing and anchor to building structure.

E. Install horizontal bridging in wall studs, spaced vertically in rows indicated on Shop Drawings but not more than 48 inches apart. Fasten at each stud intersection.

1. Strap Bridging: Combination of flat, taut, steel sheet straps of width and thickness indicated and stud-track solid blocking of width and thickness to match studs. Fasten flat straps to stud flanges and secure solid blocking to stud webs or flanges.

F. Top Bridging for Single Deflection Track: Install row of horizontal bridging within 12 inches of single deflection track. Install a combination of bridging and stud or stud-track solid blocking of width and thickness matching studs, secured to stud webs or flanges.

1. Install solid blocking at centers indicated on Shop Drawings.

G. Install miscellaneous framing and connections, including stud kickers, web stiffeners, clip angles, continuous angles, anchors, and fasteners, to provide a complete and stable wall-framing system.

3.04 INTERIOR NON-LOAD-BEARING WALL INSTALLATION

A. Install continuous tracks sized to match studs. Align tracks accurately and securely anchor to supporting structure.

B. Fasten both flanges of studs to bottom track unless otherwise indicated. Space studs as follows:

1. Stud Spacing: As indicated on Drawings or 16 inches on center maximum.

C. Set studs plumb, except as needed for diagonal bracing or required for nonplumb walls or warped surfaces and similar requirements.

1. Install single deep-leg deflection tracks and anchor to building structure.

D. Install horizontal bridging in wall studs, spaced vertically in rows indicated on Shop Drawings but not more than 48 inches apart. Fasten at each stud intersection.

1. Strap Bridging: Combination of flat, taut, steel sheet straps of width and thickness indicated and stud-track solid blocking of width and thickness to match studs. Fasten flat straps to stud flanges and secure solid blocking to stud webs or flanges.

E. Top Bridging for Single Deflection Track: Install row of horizontal bridging within 12 inches of single deflection track. Install a combination of bridging and stud or stud-track solid blocking of width and thickness matching studs, secured to stud webs or flanges.

1. Install solid blocking at centers indicated on Shop Drawings.

F. Install miscellaneous framing and connections, including stud kickers, web stiffeners, clip angles, continuous angles, anchors, and fasteners, to provide a complete and stable wall-framing system.

3.05 ERECTION TOLERANCES

A. Install cold-formed steel framing level, plumb, and true to line to a maximum allowable tolerance variation of 1/8 inch in 10 feet and as follows:

1. Space individual framing members no more than plus or minus 1/8 inch from plan location. Cumulative error shall not exceed minimum fastening requirements of sheathing or other finishing materials.

3.06 FIELD QUALITY CONTROL

A. Testing: Contractor will engage a qualified independent testing and inspecting agency to perform field tests and inspections and prepare test reports.

B. Field and shop welds will be subject to testing and inspecting.

C. Testing agency will report test results promptly and in writing to Contractor and Architect.

D. Cold-formed steel framing will be considered defective if it does not pass tests and inspections.

E. Additional testing and inspecting, at Contractor's expense, will be performed to determine compliance of replaced or additional work with specified requirements.

3.07 REPAIRS AND PROTECTION

A. Galvanizing Repairs: Prepare and repair damaged galvanized coatings on fabricated and installed cold-formed steel framing with galvanized repair paint according to ASTM A780/A780M and manufacturer's written instructions.

B. Provide final protection and maintain conditions, in a manner acceptable to manufacturer and Installer that ensure that cold-formed steel framing is without damage or deterioration at time of Substantial Completion.

END OF SECTION

SECTION 05 50 00

MISCELLANEOUS METALS

PART 1 - GENERAL

1.01 DESCRIPTION:

A. This section includes metal fabrications not specifically included in other Sections and required for completion of work as shown on Contract Drawings and in accordance with Contract Documents.

B. Furnish labor, materials, equipment and incidentals necessary to install the products specified.

1.02 REFERENCES:

A. American Society of Mechanical Engineers (ASME):

1. B18.5: Round Head Bolts.

B. ASTM International (ASTM):

1. A6: General Requirements for Rolled Structural Steel Bars, Plates, Shapes and Sheet Piling.

2. A36: Standard Specification for Carbon Structural Steel.

3. A48: Standard Specification for Gray Iron Castings.

4. A53: Standard Specification for Pipe, Steel, Black and Hot-Dipped, Zinc-Coated, Welded and Seamless.

5. A108: Standard Specification for Steel Bars, Carbon, Cold Finished, Standard Quality.

6. A123/A123M: Standard Specification for Zinc (Hot-Dip Galvanized) Coatings on Iron and Steel Products.

7. A153: Standard Specification for Zinc Coating (Hot-Dip) on Iron and Steel Hardware.

8. A193/A193M: Standard Specification for Alloy-Steel and Stainless Steel Bolting Materials for High Temperature or High Pressure Service and Other Special Purpose Applications.

9. A240: Standard Specification for heat-resisting chromium and chromium-nickel stainless steel plate, sheet, and strip for pressure vessels.

10. A276: Standard Specification for Stainless Steel Bars and Shapes.

11. A307: Carbon Steel Bolts and Studs, 60,000 psi Tensile Strength.

12. A489: Standard Specification for Carbon Steel Lifting Eyes.

13. A500: Standard Specification for Cold-Formed Welded and Seamless Carbon Steel Structural Tubing in Rounds and Shapes.

14. A501: Standard Specification for Hot-Formed Welded and Seamless Carbon Steel Structural Tubing.

15. A502: Steel Structural Rivets.

16. A536: Standard Specification for Ductile Iron Castings.

17. A572: Standard Specification for High-Strength Low-Alloy Columbium-Vanadium Structural Steel

18. A576: Steel Bars, Carbon, Hot-Wrought, Special Quality.

19. A675: Steel Bars, Carbon, Hot-Wrought, Special Quality, Mechanical Properties.

20. A786: Rolled Steel Floor Plates.

21. A992: Standard Specification for Structural Shapes.

22. A1008/A1008M: Standard Specification for Steel, Sheet, Cold-Rolled, Carbon, Structural, High-Strength Low-Alloy, High-Strength Low-Alloy with Improved Formability, Solution Hardened, and Bake Hardenable.

23. A1011/A1011M: Standard Specification for Steel, Sheet and Strip, Hot-Rolled, Carbon, Structural, High-Strength Low-Alloy, High-Strength Low-Alloy with Improved Formability, and Ultra-High Strength.

24. B26: Specification for Aluminum-Alloy Sand Castings.

25. B211: Specification for Aluminum-Alloy Bars, Rods, Profiles and Tubes.

26. B209: Specification for Aluminum and Aluminum-Alloy Sheet and Plate.

27. B221: Specification for Aluminum-Alloy Extruded Bars, Rods, Wire, Shapes, and Tubes.

28. B247: Specification for Aluminum and Aluminum-Alloy Die Forgings, Hand Forgings and Rolled Ring Forgings.

29. B308: Standard Specification for Aluminum-Alloy 6061-T6 Standard Structural Profiles.

30. B 429: Specification for Aluminum-Alloy Extruded Structural Pipe and Tube.

31. D1056: Standard Specification for Flexible Cellular Materials—Sponge or Expanded Rubber.

32. F436: Standard Specification for Hardened Steel Washers.

33. F541: Standard Specification for Alloy Steel Eyebolts.

34. F593: Standard Specification for Stainless Steel Bolts, Hex Cap Screws, and Studs.

35. F594: Standard Specification for Stainless Steel Nuts.

36. F844 REV A: Standard Specification for Washers, Steel, Plain (Flat), Unhardened for General Use.

37. F1554: Standard Specification of Anchor Bolts, steel, 36, 55 and 105-ksi Yield Strength.

38. F2329: Standard Specification for Zinc Coating, Hot-Dip, Requirements for Application to Carbon and Alloy Steel Bolts, Screws, Washers, Nuts, and Special Threaded Fasteners.

39. F3125/F3125M REV A: Standard Specification for High Strength Structural Bolts, Steel and Alloy Steel, Heat Treated, 120 ksi (830 MPa) and 150 ksi (1040 MPa) Minimum Tensile Strength, Inch and Metric Dimensions.

C. American Institute of Steel Construction (AISC):

1. ANSI/AISC 360-10: Specification for Structural Steel Buildings

2. AISC Manual of Steel Construction, Fourteenth Edition

D. American Welding Society (AWS):

1. A2.4: Standard Symbols for Welding, Brazing, and Nondestructive Examination.

2. D1.1: Structural Welding Code.

3. D1.2: Structural Welding Code - Aluminum.

4. D1.3: Structural Welding Code – Sheet Steel

E. National Association of Architectural Metal Manufacturers (NAAMM):

1. MBG 531: Metal Bar Grating Manual.

2. MBG 532: Heavy Duty Metal Bar Grating Manual.

3. MBG 533: Welding Specifications for Fabrication of Steel, Aluminum and Stainless Bar Grating.

F. Aluminum Association:

1. AA ADM: Aluminum Design Manual.

2. AA ANSI H35.1/H35.1M: American National Standard Alloy and Temper Designation System for Aluminum

1.03 SUBMITTALS:

A. Submit the following shop drawings in accordance with Section 01 33 00.

1. Submit shop drawings and product data showing materials of construction and details of installation for all items furnished under this Section. Shop drawings shall show sizes of members, method of assembly, anchorage and connection to other members.

2. Test Reports:

a. Submit certified copies of mill test reports on each steel, stainless steel, or aluminum proposed for use showing the physical properties and chemical analysis.

3. Product Data:

a. Manufacturer’s catalog sheets on pre-manufactured items.

4. Miscellaneous Submittals:

a. Provide International Code Council Evaluation Report (ICC-ES) or other similar building code organization recommendations for post installed concrete and masonry anchors.

5. Stamped by Professional Structural Engineer registered in State where the project is located.

1.04 DESIGN CRITERIA:

A. Structural Connections: AISC Specification for Structural Steel Buildings. Design connections not fully detailed on the Drawings to resist the loads shown on the Contract Drawings or specified.

B. Where beam end reactions are not shown, design the connection for one-half the total allowable uniform load in kips for beams laterally supported at the given span, as determined by the tables for allowable loads on beams in the AISC Manual of Steel Construction, in addition to any axial loads identified on the Contract Drawings.

1.05 QUALITY ASSURANCE:

A. Comply with the requirements specified in Section 01 40 00.

B. Design connections not detailed on the Drawings under direct supervision of a Professional Structural Engineer experienced in design of this work and licensed in the State where the Project is located.

C. Steel:

1. Conform to codes for arc and gas welding in building construction of AWS and to AISC Specifications. Surfaces to be welded shall be free from loose scale, rust, grease, paint, and other foreign material, except mill scale that will withstand vigorous wire brushing may remain. Perform no welding when base metal is lower than 0 degrees F.

2. Qualify welding operators in accordance with AWS D1.1. Qualification tests shall be run by a recognized testing laboratory acceptable to the Engineer at Contractor's expense.

D. Aluminum:

1. Weld with gas metal arc (GMA) or gas tungsten arc (GTA) processes in accordance with AWS.

E. Adhesive Anchors:

1. Adhesive Anchor Installers shall be trained and certified by manufacturer.

F. Galvanized Coating:

1. Company specializing in hot-dip galvanizing after fabrication and following procedures of Quality Assurance Manual of the American Galvanizers Association.

1.06 DELIVERY STORAGE AND HANDLING:

A. Insofar as practical, factory assemble items specified herein. Package, ship and tag unassembled materials in a manner that will protect materials from damage and will facilitate identification and field assembly.

B. Package stainless steel items in a manner to provide protection from carbon impregnation.

C. Protect painted coatings and hot-dip galvanized finishes from damage due to metal banding and rough handling. Use padded slings and straps.

D. Deliver items to be incorporated into the work of other trades in sufficient time to be checked prior to installation.

E. Store fabricated items in a dry area, not in direct contact with ground.

1.07 FIELD MEASUREMENTS:

A. The Contractor shall verify all dimensions and shall make any field measurements necessary and shall be fully responsible for accuracy and layout of the work.

B. The Contractor shall review the Contract Drawings and any discrepancies shall be reported to the Engineer for clarification prior to starting fabrication.

PART 2 - PRODUCTS

2.01 MISCELLANEOUS METAL SHAPES, CASTINGS, BOLTS AND ACCESSORIES:

A. Structural Steel Shapes:

1.	W Shapes:	ASTM A992, 50 ksi
2.	S, C and MC Shapes:	ASTM A36
3.	HSS Square and Rectangular Shapes:	ASTM A500, Grade B, 46 ksi
4.	HSS Round Shapes:	ASTM A500, Grade B, 42 ksi
5.	Pipe Shapes:	ASTM A53, Grade B, 35 ksi
6.	Plates and Bars:	ASTM A36
7.	Steel Sheets:	ASTM A1008/A1008M, Grade 33

B. Stainless Steel Shapes:

1.	Exterior and Submerged Uses:	AISI, Type 316
2.	Industrial Uses:	AISI, Type 316
3.	Interior and Architectural Uses:	AISI, Type 304
4.	For Welding:	AISI, Type 304L, Type 316L

5.	Shapes and Bars	ASTM A276
6.	Plate, Sheet and Strip	ASTM A240

C. Aluminum Shapes:

1.	Structural Shapes	ASTM B308, Alloy 6061-T6
2.	Extruded Pipe	ASTM B429, Alloy 6063-T6
3.	Aluminum Sheet and Plate	ASTM B209, Alloy 6061-T6

D.	High Strength Bolts for Steel Members	ASTM F3125/F3125M REV A, Grade A325, Type 1
C.	Steel Washers	ASTM F436
D.	Plain Unhardened Steel Washers:	ASTM F844

E. Anchor Bolts: ASTM F1554, Grade 55 standard headed bolts with heavy hex nuts, Grade A washers, hot-dip galvanized, unless otherwise specified.

F. Stainless Steel Bolts and Nuts: F593 and F594, AISI Type 316

G. Connection Bolts for Wood Members: ASTM A307, galvanized where specified

H. Iron Castings: ASTM A48, Class 35

I. Galvanizing: ASTM A123, Zn w/0.5 percent minimum Ni.

J. Galvanizing, hardware: ASTM A153, Zn w/0.5 percent minimum Ni.

2.02 POST INSTALLED ANCHORS:

A. Mechanical Expansion Type Anchors:

1. Products:

a. Hilti Corporation, Kwik-Bolt TZ

b. Dewalt, Power Stud +SD1

c. Simpson Strong Tie, Strong Bolt

2. General:

a. Use Zinc or chromate-plated carbon steel where totally embedded, in interior locations with controlled humidity and other protected locations, unless otherwise specified on Contract Drawings.

b. Use stainless steel in other locations or when attaching aluminum and stainless steel.

c. Do not use expansion anchors in submerged and dynamic load applications.

B. Drop-In Anchors: Not Permitted.

C. Sleeve Anchors: Not Permitted.

D. Undercut Anchors: Not Permitted.

E. Adhesive Anchors:

1. Products:

a. Hilti Corporation, Hilti HIT-HY 200 Adhesive

b. Dewalt, PE1000+ Epoxy Adhesive Anchoring System

c. Simpson Strong Tie, SET-XP Epoxy Adhesive

1. General:

a. Adhesive anchors shall be hot-dipped galvanized.

F. Adhesive Anchors for masonry:

1. Products:

a. Hilti Corporation, HIT-HY 70 Adhesive.

b. Dewalt, AC100+ Gold

c. Simpson Strong Tie, SET Adhesive

2. General:

a. Epoxy anchors shall be hot-dipped galvanized.

2.03 GRATING SUPPORT ANGLES AND FRAMING:

A. Provide galvanized steelsupport angles embedded in concrete. Angles shall be as indicated on the Contract Drawings.

2.04 METAL FRAMES:

A. Provide door, hatch, and grille frames, and other frames fabricated from structural shapes.

B. Fabricate frames from rolled steel sections or rolled steel sections and steel plates. Select sections for trueness of web and flange. Straighten members so finished frames are uniform, square, and true throughout length and depth of assembled units.

C. Connect built-up members of frames by plug welding. Miter or cope and join members with continuous welding beads. Provide temporary spreader bars to prevent springing frames out of shape prior to and during erection.

2.05 STRAP ANCHORS AND STUD ANCHORS:

A. Provide anchors for frames, curbs, sills, and other metal fabrications anchored into concrete or masonry. Fabricate anchors from strap iron, bent to shape, or of weldable studs, welded to backs of members. Where size and spacing not noted, provide 1 inch by 1/4-inch strap anchors or 3/4-inch diameter studs for concrete and 1-1/2 inch by 1/8-inch strap anchors for masonry. Space masonry anchors to fit jointing of adjacent masonry work at 4 feet on center. Space concrete anchors at 3 feet on center

B. Where anchors and plates or clips are to be built in for attachment of later work, provide bolts in plates or clips, welded to back, with threaded ends extended.

C. For attaching work to masonry or concrete where anchors or inserts cannot be built in, provide concrete anchors or machine bolts and screws.

2.06 NEOPRENE GASKET:

A. Provide soft, closed-cell neoprene gasket material suitable for exposure to sewage and sewage gases conforming to ASTM D1056, Type 2, Class C, and Grade 1.

B. Unless otherwise shown on Contract Drawings, provide neoprene gaskets with a minimum thickness of 1/4-inch.

C. Furnish neoprene gaskets without skin coat.

2.07 STEEL GRATING:

A. Manufacturers:

1. IKG Borden.

2. Clark.

3. KLEMP Corporation.

4. Or acceptable equivalent product.

B. Provide all-welded rectangular steel grating.

1. 3/16-inch thick bearing bars with depth required to support uniform load of 100 psf for given span with deflection of less than 1/4-inch based on maximum allowable fiber stress of 18,000 psi. Provide main bars with nonskid serrated surface.

2. Fabricate gratings in standard size sections. Secure in place with at least four acceptable removable type fasteners per grating panel. Band ends of each grating section with bearing bars.

3. Openings for fixtures or pipes, which require cutting of three main bars or more, finished in similar manner as ends.

4. Provide gratings in concrete having structural steel angle frames with mitered corners and welded joints ground smooth where exposed.

5. Provide hinged gratings with 180 degree double-acting stainless-steel hinges. Fasten to bearing bars with stainless-steel bolts.

6. Provide angle frame for gratings in concrete surrounds: Miter and weld corners and weld on anchors. Grind exposed welds smooth.

7. After fabrication, hot-dip galvanize.

PART 3 - EXECUTION

3.01 EXAMINATION:

A. Upon receipt of material at job site, inspect all materials for shipping damage. Replace damaged items at no cost to Owner.

B. Examine supports for size, layout and alignment.

C. Correct defects considered detrimental to proper installation.

3.02 INSTALLATION:

A. Provide items such as bolts, shims, blocks, nuts, washers, and wedging pieces to complete installation.

B. Erect to lines and levels, plumb and true, and in correct relation to adjoining Work. Secure parts using concealed connections when practicable.

C. Plumb and true vertical members to tolerance of +/- 1/8 inch in 10 feet. Level horizontal members to tolerance of +/- 1/8 inch in 10 feet.

D. Use steel bolts to connect structural steel members. Use stainless steel bolts to connect structural aluminum members.

E. Anchor Bolts and Concrete Anchors:

1. Preset anchor bolts using templates. Do not use concrete anchors in place of anchor bolts.

2. After anchor bolts are embedded, protect projecting threads by applying grease and having the nuts installed until the time of installation of equipment or metalwork.

3. Do not install concrete anchors until concrete has reached specified minimum compressive strength.

4. Install concrete anchors in accordance with anchor manufacturer recommendation. Embedment depth of anchor shall be as recommended by the anchor manufacturer, but not less than as shown on Contract Drawings.

5. Locate concrete anchors to clear reinforcing bars in concrete.

F. Weld headed anchor studs in accordance with manufacturer's recommendations.

Do not place new holes or enlarge unfair holes by use of cutting torch.

3.01 STEEL GRATINGS AND FRAMES:

A. Accurately set and properly secure frames and gratings in place. Where bolted connections are used, draw closely together and draw nuts tightly.

B. Provide standard panel widths.

C. Perform cutting and fitting as required for installation.

D. Place grating panels such that cross bars align.

E. Cutout for pipes or circular obstructions shall be 2 inches larger in diameter than the diameter of the obstruction.

F. Provide saddle clips, anchor blocks or z-clips to secure grating to supporting members or prepared openings.

G. Provide attachments to permit removal of the grating panels.

3.03 PAINTING, REPAIR, AND PROTECTION:

A. Paint aluminum in contact with concrete. Under no circumstances shall aluminum contact dissimilar metal.

B. Between aluminum grating, aluminum stair treads, or aluminum handrail brackets and steel supports, insert 1/4-inch thick neoprene isolator pads, 85 +/- 5 Shore A durometer, sized for full width and length of bracket or support.

C. Apply an anti-seize compound on all stainless steel fasteners to prevent galling.

D. Field paint in compliance with Section 09 90 10.

E. Field repair of damaged galvanized coatings:

1. Clean and repair Zinc coating that has been burned by welding, abraded, or otherwise damaged after installation. Clean damage area by wire brushing and removing all traces of welding flux and loose or cracked zinc coating

2. Coat surfaces using zinc-rich paint.

F. Field repair of damaged primer.

1. Touch up abrasions in the shop primer immediately after erection. Paint areas left unprimed for welding with primer after welding.

3.04 CLOSEOUT ACTIVITIES:

A. Provide in accordance with Section 01 77 00.

END OF SECTION

SECTION 06 10 00

ROUGH CARPENTRY

PART 1 - GENERAL

1.01 DESCRIPTION:

A. Provide materials to perform the rough carpentry work as indicated and in compliance with Contract Documents.

1. Section Includes:

a. Wood blocking, and nailers.

b. Wood furring and grounds.

1.02 REFERENCES:

A. American Society of Mechanical Engineers (ASME):

1. B18.2.1: Square and Hex Bolts and Screws (Inch Series).

2. B18.6.1: Wood Screws (Inch Series).

B. ASTM International (ASTM):

1. A153/A153M: Standard Specification for Zinc Coating (Hot-Dip) on Iron and Steel Hardware.

2. E84: Standard Test Method for Surface Burning Characteristics of Building Materials

3. E488: Standard Test Methods for Strength of Anchors in Concrete and Masonry Elements.

C. American Wood Preserver's Association Standard (AWPA):

1. M4: Standard for the Care of Preservative Treated Wood Products

2. U1: User Specification for Treated Wood

1.03 DEFINITIONS:

A. Dimension Lumber: Lumber of 2 inches (50 mm) nominal (38 mm actual) or greater but less than 5 inches (125 mm) nominal (114 mm actual) in least dimension.

B. Lumber grading agencies, and the abbreviations used to reference them, include the following:

2. NLGA: National Lumber Grades Authority.

3. SPIB: The Southern Pine Inspection Bureau.

4. WCLIB: West Coast Lumber Inspection Bureau.

5. WWPA: Western Wood Products Association.

1.04 SUBMITTALS:

A. Submit the following shop drawings in accordance with Section 01 33 00.

B. Product Data: For each type of process and factory-fabricated product. Indicate component materials and dimensions and include construction and application details.

1. Include data for wood-preservative treatment from chemical treatment manufacturer and certification by treating plant that treated materials comply with requirements. Indicate type of preservative used and net amount of preservative retained.

2. Include data for fire-retardant treatment from chemical treatment manufacturer and certification by treating plant that treated materials comply with requirements. Include physical properties of treated materials based on testing by a qualified independent testing agency.

3. For fire-retardant treatments, include physical properties of treated lumber both before and after exposure to elevated temperatures, based on testing by a qualified independent testing agency according to ASTM D5664.

4. For products receiving a waterborne treatment, include statement that moisture content of treated materials was reduced to levels specified before shipment to Project site.

5. Include copies of warranties from chemical treatment manufacturers for each type of treatment.

C. Material Certificates: For dimension lumber specified to comply with minimum allowable unit stresses. Indicate species and grade selected for each use and design values approved by the ALSC Board of Review.

1.06 QUALITY ASSURANCE:

A. Comply with the requirements specified in Section 01 43 00.

B. Testing Agency Qualifications: For testing agency providing classification marking for fire-retardant treated material, an inspection agency acceptable to authorities having

jurisdiction that periodically performs inspections to verify that the material bearing the classification marking is representative of the material tested.

1.07 DELIVERY STORAGE AND HANDLING:

A. Comply with the requirements specified in Section 01 66 10.

B. Stack lumber flat with spacers beneath and between each bundle to provide air circulation. Protect lumber from weather by storing inside the building or by covering with waterproof sheeting, securely anchored. Provide for air circulation around stacks and under coverings.

PART 2 - PRODUCTS

2.01 WOOD PRODUCTS, GENERAL:

A. Lumber: DOC PS 20 and applicable rules of grading agencies indicated. If no grading agency is indicated, provide lumber that complies with the applicable rules of any rules-writing agency certified by the ALSC Board of Review. Provide lumber graded by an agency certified by the ALSC Board of Review to inspect and grade lumber under the rules indicated.

1. Factory mark each piece of lumber with grade stamp of grading agency.

2. Provide dressed lumber, S4S, unless otherwise indicated.

B. Maximum Moisture Content of Lumber: 19 percent for 2-inch (50 mm) nominal (38 mm actual) thickness or less unless otherwise indicated.

2.02 WOOD-PRESERVATIVE-TREATED LUMBER:

A. Preservative Treatment by Pressure Process: AWPA U1; Use Category UC2

1. Preservative Chemicals: Acceptable to authorities having jurisdiction and containing no arsenic or chromium. Do not use inorganic boron (SBX) for sill plates.

B. Kiln-dry lumber after treatment to a maximum moisture content of 19 percent. Do not use material that is warped or that does not comply with requirements for untreated material.

C. Mark lumber with treatment quality mark of an inspection agency approved by the ALSC Board of Review.

D. Application: Treat items indicated on Drawings, and the following:

1. Wood blocking, furring, stripping, and similar concealed members in contact with masonry or concrete.

2. Wood furring attached directly to the interior of below-grade exterior masonry or concrete walls.

3. Wood floor plates that are installed over concrete slabs-on-grade.

2.03 FIRE-RETARDANT-TREATED MATERIALS:

A. General: Where fire-retardant-treated materials are indicated or part of a rated assembly, use materials complying with requirements in this article, that are acceptable to authorities having jurisdiction, and with fire-test-response characteristics specified as determined by testing identical products per test method indicated by a qualified testing agency.

B. Fire-Retardant-Treated Lumber and Plywood by Pressure Process: Products with a flame spread index of 25 or less when tested according to ASTM E84, and with no evidence of significant progressive combustion when the test is extended an additional 20 minutes, and with the flame front not extending more than 10.5 feet (3.2 m) beyond the centerline of the burners at any time during the test.

1. Use treatment that does not promote corrosion of metal fasteners.

2. Exterior Type: Treated materials shall comply with requirements specified above for fire-retardant-treated lumber and plywood by pressure process after being subjected to accelerated weathering according to ASTM D2898. Use for exterior locations and where indicated.

3. Interior Type A: Treated materials shall have a moisture content of 28 percent or less when tested according to ASTM D3201 at 92 percent relative humidity. Use where exterior type is not indicated.

4. Design Value Adjustment Factors: Treated lumber shall be tested according ASTM D5664 and design value adjustment factors shall be calculated according to ASTM D6841.

C. Kiln-dry lumber after treatment to a maximum moisture content of 19 percent. Kiln-dry plywood after treatment to a maximum moisture content of 15 percent.

D. Identify fire-retardant-treated wood with appropriate classification marking of qualified testing agency.

E. Application: Treat all rough carpentry unless otherwise indicated, items indicated on Drawings, and the following:

1. Concealed blocking.

2. Framing for non-load-bearing partitions where noted.

3. Plywood backing panels.

2.04 DIMENSION LUMBER FRAMING:

A. Non-Load-Bearing Interior Partitions: Construction, Stud, or No. 3 grade.

1. Application: Interior partitions where noted on drawings.

2. Species:

a. Hem-fir (north); NLGA.

b. Mixed southern pine; SPIB.

c. Spruce-pine-fir; NLGA.

d. Hem-fir; WCLIB, or WWPA.

e. Spruce-pine-fir (south); NeLMA, WCLIB, or WWPA.

f. Northern species; NLGA.

g. Eastern softwoods; NeLMA.

h. Western woods; WCLIB or WWPA.

2.05 MISCELLANEOUS LUMBER:

A. General: Provide miscellaneous lumber indicated and lumber for support or attachment of other construction, including the following:

1. Blocking.

2. Nailers.

3. Furring.

4. Grounds.

B. For concealed boards, provide lumber with 19 percent maximum moisture content and of any species and grades.

C. For blocking not used for attachment of other construction, Utility, Stud, or No. 3 grade lumber of any species may be used provided that it is cut and selected to eliminate defects that will interfere with its attachment and purpose.

D. For blocking and nailers used for attachment of other construction, select and cut lumber to eliminate knots and other defects that will interfere with attachment of other work.

E. For furring strips for installing plywood or hardboard paneling, select boards with no knots capable of producing bent-over nails and damage to paneling.

2.06 PLYWOOD BACKING PANELS:

A. Equipment Backing Panels: DOC PS 1, Exposure 1, C-D Plugged, fire-retardant treated,]in thickness indicated or, if not indicated, not less than 1/2-inch (13-mm) nominal thickness.

2.07 FASTENERS:

A. General: Provide fasteners of size and type indicated that comply with requirements specified in this article for material and manufacture.

1. Where rough carpentry is pressure-preservative treated or in area of high relative humidity, provide fasteners with hot-dip zinc coating complying with ASTM A153/A153M

B. Nails, Brads, and Staples: ASTM F1667.

D. Power-Driven Fasteners: NES NER-272.

E. Wood Screws: ASME B18.6.1.

F. Screws for fastening to Cold formed Metal Framing: ASTM C954, except with wafer heads and reamer wings, length as recommended by screw manufacturer for material being fastened.

G. Lag Bolts: ASME B18.2.1 (ASME B18.2.3.8M).

H. Bolts: Steel bolts complying with ASTM A307, Grade A (ASTM F568M, Property Class 4.6); with ASTM A563 (ASTM A563M) hex nuts and, where indicated, flat washers.

I. Expansion Anchors: Anchor bolt and sleeve assembly of material indicated below with capability to sustain, without failure, a load equal to six times the load imposed when installed in unit masonry assemblies and equal to four times the load imposed when installed in concrete as determined by testing per ASTM E488 conducted by a qualified independent testing and inspecting agency.

1. Material: Stainless steel with bolts and nuts complying with ASTM F593 and ASTM F594, Alloy Group 1 or 2 (ASTM F738M and ASTM F836M, Grade A1 or A4).

PART 3 - EXECUTION

3.01 INSTALLATION, GENERAL:

A. Set rough carpentry to required levels and lines, with members plumb, true to line, cut, and fitted. Fit rough carpentry to other construction; scribe and cope as needed for

accurate fit. Locate furring, nailers, blocking, and similar supports to comply with requirements for attaching other construction.

B. Install plywood backing panels by fastening to furring or wall construction. Coordinate locations with utilities requiring backing panels. Install fire-retardant treated plywood backing panels with classification marking of testing agency exposed to view.

C. Metal Framing Anchors: Install metal framing anchors to comply with manufacturer's written instructions. Install fasteners through each fastener hole.

D. Provide blocking and framing as indicated and as required to support facing materials, fixtures, specialty items, and trim.

1. Provide metal clips for fastening gypsum board or lath at corners and intersections where framing or blocking does not provide a surface for fastening edges of panels. Space clips not more than 16 inches (406 mm) o.c.

E. Sort and select lumber so that natural characteristics will not interfere with installation or with fastening other materials to lumber. Do not use materials with defects that interfere with function of member or pieces that are too small to use with minimum number of joints or optimum joint arrangement.

F. Comply with AWPA M4 for applying field treatment to cut surfaces of preservative-treated lumber.

G. Securely attach rough carpentry work to substrate by anchoring and fastening as indicated, complying with the following:

1. NES NER-272 for power-driven fasteners.

2. Table 2304.9.1, "Fastening Schedule," in ICC's International Building Code.

3. Table R602.3(1), "Fastener Schedule for Structural Members," and Table R602.3(2), "Alternate Attachments," in ICC's International Residential Code for One- and Two-Family Dwellings.

H. Use steel common nails unless otherwise indicated. Select fasteners of size that will not fully penetrate members where opposite side will be exposed to view or will receive finish materials. Make tight connections between members. Install fasteners without splitting wood. Drive nails snug but do not countersink nail heads unless otherwise indicated.

I. For exposed work, arrange fasteners in straight rows parallel with edges of members, with fasteners evenly spaced, and with adjacent rows staggered.

1. Comply with accepted fastener patterns where applicable Use finishing nails unless otherwise indicated. Countersink nail heads and fill holes with wood filler.

3.02 WOOD BLOCKING, AND NAILER INSTALLATION:

A. Attach items to substrates to support applied loading. Recess bolts and nuts flush with surfaces unless otherwise indicated.

3.03 WOOD FURRING INSTALLATION:

A. Install level and plumb with closure strips at edges and openings. Shim with wood as required for tolerance of finish work.

B. Furring to Receive Plywood Install 1-by-3-inch (25 by 50 mm) nominal- (19-by-63-mm actual-) size furring horizontally or vertically at 24 inches (600 mm) o.c.

C. Furring to Receive Gypsum Board Install 1-by-2-inch (25 by 50 mm) nominal- (19-by-38-mm actual-) size furring vertically at 16 inches (400 mm) o.c.

3.04 PROTECTION:

A. Protect wood that has been treated with inorganic boron (SBX) from weather. If, despite protection, inorganic boron-treated wood becomes wet, apply EPA-registered borate treatment. Apply borate solution by spraying to comply with EPA-registered label.

B. Protect rough carpentry from weather. If, despite protection, rough carpentry becomes sufficiently wet that moisture content exceeds that specified, apply EPA-registered borate treatment. Apply borate solution by spraying to comply with EPA-registered label.

3.05 CONTRACT CLOSEOUT:

A. Provide in accordance with Section 01 77 00.

END OF SECTION

SECTION 07 21 00

BUILDING INSULATION

PART 1 - GENERAL

1.01 DESCRIPTION:

A. Provide building insulation as indicated and in compliance with Contract Documents:

1. Section Includes:

a. Foam-plastic board insulation.

b. Glass-fiber blanket insulation.

c. Loose-fill insulation.

1.02 REFERENCES:

A. ASTM International (ASTM):

1. C552: Standard Specification for Cellular Glass Thermal Insulation.

2. C553: Standard Specification for Mineral Fiber Blanket Thermal Insulation for Commercial and Industrial Applications.

3. C1371: Standard Test Method for Determination of Emittance of Materials Near Room Temperature Using Portable Emissometers.

4. D4397: Standard Specification for Polyethylene Sheeting for Construction, Industrial, and Agricultural Applications.

5. E84: Standard Test Method for Surface Burning Characteristics of Building Materials.

6. E136: Standard Test Method for Behavior of Materials in a Vertical Tube Furnace at 750 degrees C.

1.03 DEFINITIONS:

A. Thermal Resistivity: Where the thermal resistivity of insulation products is designated by "r values," they represent the reciprocal of thermal conductivity (k values). Thermal conductivity is the rate of heat flow through a homogenous material exactly 1 inch thick. Thermal resistivities are expressed by the temperature difference in degrees F between the two exposed faces required to cause one BTU to flow through one square foot per hour at mean temperatures indicated.

1.04 SUBMITTALS:

A. Submit the following shop drawings in accordance with Section 01 33 00.

1. Product Data: For each type of product indicated.

2. Product Test Reports: Based on evaluation of comprehensive tests performed by a qualified testing agency, for each product.

3. Research/Evaluation Report: For foam-plastic insulation, Insert applicable model code organization.

1.05 QUALITY ASSURANCE:

A. Fire Performance Characteristics: Provide insulation materials that meet the following:

1. Surface Burning Characteristic: ASTM E84.

2. Fire Resistance Ratings: ASTM E119.

3. Combustion Characteristics: ASTM E136.

B. Single Source Responsibility for Insulation Products: Obtain each type of building insulation from a single source with resources to provide products of consistent quality in appearance and physical properties without delaying progress of the Work.

1.07 DELIVERY STORAGE AND HANDLING:

A. Protect insulation materials from physical damage and from deterioration due to moisture, soiling, and other sources. Store inside and in a dry location. Comply with manufacturer's written instructions for handling, storing, and protecting during installation.

PART 2 - PRODUCTS

2.01 GLASS-FIBER BLANKET INSULATION

A. Manufacturers:

1. CertainTeed Corporation.

2. Guardian Building Products, Inc.

3. Johns Manville.

4. Knauf Insulation.

5. Owens Corning.

B. Unfaced, Glass-Fiber Blanket Insulation: ASTM C665, Type I; with maximum flame-spread and smoke-developed indexes of 25 and 50, respectively, per ASTM E84; passing ASTM E136 for combustion characteristics.

C. Polypropylene-Scrim-Kraft-Faced, Glass-Fiber Blanket Insulation: ASTM C665, Type II (non-reflective faced), Class A (faced surface with a flame-spread index of 25 or less); Category 1 (membrane is a vapor barrier).

D. Reinforced-Foil-Faced, Glass-Fiber Blanket Insulation: ASTM C665, Type III (reflective faced), Class A (faced surface with a flame-spread index of 25 or less); Category 1 (membrane is a vapor barrier), faced with foil scrim, foil-scrim kraft, or foil-scrim polyethylene.

E. Foil-Faced, Glass-Fiber Blanket Insulation: ASTM C665, Type III (reflective faced), Class B (faced surface with a flame-propagation resistance of 0.12 W/sq. cm); Category 1 (membrane is a vapor barrier), faced with foil scrim, foil-scrim kraft, or foil-scrim polyethylene.

2.02 LOOSE-FILL INSULATION:

A. Glass-Fiber Loose-Fill Insulation: ASTM C764, Type I for pneumatic application or Type II for poured application; with maximum flame-spread and smoke-developed indexes of 5, per ASTM E84.

PART 3 - EXECUTION

3.01 PREPARATION:

A. Clean substrates of substances that are harmful to insulation or vapor retarders, including removing projections capable of puncturing vapor retarders,]or that interfere with insulation attachment.

3.02 INSTALLATION, GENERAL:

A. Comply with insulation manufacturer's written instructions applicable to products and applications indicated.

B. Install insulation that is undamaged, dry, and unsoiled and that has not been left exposed to ice, rain, or snow at any time.

C. Extend insulation to envelop entire area to be insulated. Cut and fit tightly around obstructions and fill voids with insulation. Remove projections that interfere with placement.

D. Provide sizes to fit applications indicated and selected from manufacturer's standard thicknesses, widths, and lengths. Apply single layer of insulation units to produce

thickness indicated unless multiple layers are otherwise shown or required to make up total thickness.

3.03 INSTALLATION OF INSULATION FOR FRAMED CONSTRUCTION:

A. Install insulation units complying with manufacturer's written instructions. Glass-Fiber or Mineral-Wool Blanket Insulation: Install in cavities formed by framing members as required.

1. Use insulation widths and lengths that fill the cavities formed by framing members. If more than one length is required to fill the cavities, provide lengths that will produce a snug fit between ends.

2. Place insulation in cavities formed by framing members to produce a friction fit between edges of insulation and adjoining framing members.

3. Maintain 3-inch (75-mm) clearance of insulation around recessed lighting fixtures not rated for or protected from contact with insulation.

4. For metal-framed wall cavities where cavity heights exceed 96 inches (2440 mm), support unfaced blankets mechanically and support faced blankets by taping flanges of insulation to flanges of metal studs.

5. Vapor-Retarder-Faced Blankets: Tape joints and ruptures in vapor-retarder facings and seal each continuous area of insulation to ensure airtight installation.

B. Miscellaneous Voids: Install insulation in miscellaneous voids and cavity spaces where required to prevent gaps in insulation using the following materials:

1. Loose-Fill Insulation: Compact to approximately 40 percent of normal maximum volume equaling a density of approximately 2.5 lb/cu. ft. (40 kg/cu. m).

3.04 INSTALLATION OF INSULATION IN CEILINGS FOR SOUND ATTENUATION:

A. Where glass-fiber blankets are indicated for sound attenuation above ceilings, install blanket insulation over entire ceiling area in thicknesses indicated. Extend insulation 48 inches (1219 mm) up either side of partitions.

3.05 INSTALLATION OF VAPOR RETARDERS:

A. Place vapor retarders on side of construction indicated on Drawings. Extend vapor retarders to extremities of areas to protect from vapor transmission. Secure vapor retarders in place with adhesives or other anchorage system as indicated. Extend vapor retarders to cover miscellaneous voids in insulated substrates, including those filled with loose fiber insulation.

B. Seal vertical joints in vapor retarders over framing by lapping no fewer than two studs.

1. Fasten vapor retarders to wood framing at top, end, and bottom edges; at perimeter of wall openings; and at lap joints. Space fasteners 16 inches (406 mm) o.c.

2. Before installing vapor retarders, apply urethane sealant to flanges of metal framing including runner tracks, metal studs, and framing around door and window openings. Seal overlapping joints in vapor retarders with vapor-retarder tape according to vapor-retarder manufacturer's written instructions. Seal butt joints with vapor-retarder tape. Locate all joints over framing members or other solid substrates.

3. Firmly attach vapor retarders to metal framing and solid substrates with vapor-retarder fasteners as recommended by vapor-retarder manufacturer.

C. Seal joints caused by pipes, conduits, electrical boxes, and similar items penetrating vapor retarders with vapor-retarder tape to create an airtight seal between penetrating objects and vapor retarders.

D. Repair tears or punctures in vapor retarders immediately before concealment by other work. Cover with vapor-retarder tape or another layer of vapor retarders.

3.06 PROTECTION:

A. Protect installed insulation and vapor retarders from damage due to harmful weather exposures, physical abuse, and other causes. Provide temporary coverings or enclosures where insulation is subject to abuse and cannot be concealed and protected by permanent construction immediately after installation.

3.07 CONTRACT CLOSEOUT:

A. Provide in accordance with Section 01 77 00.

END OF SECTION

SECTION 07 24 10
EXTERIOR INSULATION AND FINISH SYSTEMS

PART 1 GENERAL

1.01 SUMMARY

A. Section Includes:

1. Exterior insulation and finish system (EIFS) applied over masonry surfaces.

1.02 DEFINITIONS

A. Class PB Exterior Insulation and Finish System (EIFS) is defined by ASTM C1397 as "non-load bearing, exterior wall cladding system that consists of insulation board attached either adhesively, mechanically, or both to substrate; integrally reinforced base coat; and texture protective finish coat."

B. Systems refer to Class PB EIFS.

C. System manufacturer refers to EIFS manufacturer.

1.03 PERFORMANCE REQUIREMENTS

A. Provide systems that comply with following performance requirements:

1. Bond Integrity: Free from bond failure within system components or between system and supporting wall construction, resulting from exposure to fire, wind loads, weather, or other in-service conditions.
2. Weather-tightness: Resistant to water penetration from exterior into system and assemblies behind it or through them into interior of building that results in deterioration of thermal-insulating effectiveness or other degradation of system and assemblies behind it, including substrates, supporting wall construction, and interior finish.
3. EIMA Guideline Specifications for Exterior Insulation and Finish Systems

1.04 SUBMITTALS

A. Product Data: For each component of EIFS specified. Include a description of installation procedures so as to match existing installation.

B. Sample: 24 in. sq. panels for each finish, color, texture, and pattern to illustrate installation will match existing. Prepare samples using same tools and techniques intended for actual work.

1. Incorporate within each sample typical control joint filled with sealant of color indicated or selected.

C Miscellaneous:

1. Installer Certificates: Signed by system manufacturer certifying that installers comply with specified requirements and installer is certified to do the work.

2. Material Certificates: Signed by manufacturers or third-party agency approved by system manufacturer certifying that each of following items complies with requirements:

a. Insulation.
b. Joint sealants.

D. Submit in accordance with Section 01 33 10.

1.05 QUALITY ASSURANCE

A. Installer Qualifications: Engage experienced installer who is certified in writing by system manufacturer as qualified to install manufacturer's system.

B. Manufacturer Qualifications: Engage firm experienced in manufacturing systems similar to those indicated for this Project and with a record of successful in-service performance.

1.06 DELIVERY, STORAGE AND HANDLING

A. Deliver materials in original, unopened packages with manufacturer's labels intact and clearly identifying products.

B. Store materials inside and under cover; keep them dry and protected from weather, direct sunlight, surface contamination, aging, corrosion, damaging temperatures, construction traffic, and other causes.

1. Protect plastic insulation against ignition at all times. Do not deliver plastic insulating materials to Project site before installation time.
2. Complete installation and concealment of plastic materials as rapidly as possible in each area of construction.

1.07 PROJECT CONDITIONS

A. Environmental Limitations: Do not install system when ambient outdoor air and substrate temperatures are 40°F (4.4°C) and falling unless temporary protection and heat are provided to maintain ambient temperatures above 40°F (4.4°C) during

installation of wet materials and until they have dried thoroughly and become weather resistant, but for at least 24 hrs after installation.

1.08 COORDINATION AND SCHEDULING

A Coordinate installation of EIFS with related Work specified in other Sections to ensure that wall assemblies, are protected against damage from the effects of weather, age, corrosion, moisture, and other causes. Do not allow water to penetrate behind EIFS.

PART 2 PRODUCTS

2.01 Provide Water Drainage EIMA Class PB Exterior Insulation and finish System incorporating an unobstructed drainage plane and vapor barrier that matches and is compatible with the existing installation, has successful similar installations within 50 miles of the project and is from one of the following manufacturers:

A. Bonsal: W.R. Bonsal Co.

B. Dryvit Systems, Inc.

C. Pleko Products, Inc.

D. Senergy Div.; of Harris Specialty Chemicals, Inc.

E. Sto Corp.; Sto Finish Systems Div.

F. Thoro System Products

2.02 MATERIALS

A. Compatibility: Provide substrates, adhesive, board insulation, reinforcing meshes, base- and finish-coat materials, sealants, and accessories that are compatible with one another and approved for use by system manufacturer for Project.

B. Colors, Textures, and Patterns of Finish Coat: As selected by ENGINEER..

C. Vapor Barrier: fluid applied vapor retarder as recommended by the EIFS manufacturer.

D. Adhesive for Application of Insulation: System manufacturer's standard formulation designed for indicated use, compatible with substrate, factory-mixed formulation designed for adhesive attachment of insulation to substrates of type indicated, as recommended by system manufacturer.

E. Molded-Polystyrene Board Insulation: Rigid, cellular thermal insulation formed by expansion of polystyrene resin beads or granules in closed mold. Comply with system manufacturer's requirements, ASTM C578 for Type I, and "EIMA Guideline

Specification for Expanded Polystyrene (EPS) Insulation Board" for more stringent requirements for material performance and qualities of insulation, including dimensions and permissible variations, and following:

1. Before cutting and shipping, age insulation in block form by air drying for not less than 6 weeks or by another method approved by EIMA that produces equivalent results.
2. Minimum R = 3.6 per inch.

F. Reinforcing Mesh: Balanced, alkali-resistant, open-weave glass-fiber mesh treated for compatibility with other system materials, made from continuous multi-end strands with retained mesh tensile strength of not less than 120 lbf/in. (21 dN/cm) per EIMA 105.01, complying with ASTM D578 and following requirements for minimum weight:

1. Intermediate Reinforcing Mesh: Not less than 9.5 oz/sq yd (322 g/sq m).
2. Impact-Resistant Reinforcing Mesh: Not less than 20 oz/sq yd (678 g/sq m).
3. Corner Reinforcing Mesh: Not less than 7.2 oz/sq yd (244 g/sq m).

G. Drainage Mat: Self-furring PVC lath as recommended by manufacturer.

F. Base-Coat Materials: System manufacturer's standard recommended mixture to match existing

I. Finish-Coat Materials: System manufacturer's standard recommended mixture to match existing.

J. Water: Potable.

K. Elastomeric Sealant Products: Provide system manufacturer's listed and recommended chemically curing, elastomeric sealant that is compatible with joint fillers, joint substrates, and other related materials, and complies with requirements for products and testing indicated in "EIMA Guide for Use of Sealants with Exterior Insulation and Finish Systems, Class PB. Match existing color.

L. Provide manufacturer's "armor coat" system (impact resistant system) where EIFS is within 8'-0" of grade.

2.04 MIXING

A. Comply with system manufacturer's requirements for combining and mixing materials. Do not introduce admixtures, water, or other materials except as recommended by system manufacturer. Mix materials in clean containers. Use materials within time period specified by system manufacturer or discard.

2.05 ACCESSORIES

A. Furnish plastic or noncorrosive metal beads, drips grounds and other accessories.

PART 3 EXECUTION

3.01 EXAMINATION

A. Authorized representative of manufacturer, Installer and Contractor examine substrates, areas, and conditions, for compliance with requirements for installation tolerances and other conditions affecting performance of system. Proceed with installation of system only after unsatisfactory conditions have been corrected.

3.02 PREPARATION

A. Protect contiguous work from moisture deterioration and soiling caused by application of systems. Provide temporary covering and other protection needed to prevent spattering of exterior finish coats on other work.

B. Protect system, substrates, and wall construction behind them from inclement weather during installation. Prevent infiltration of moisture behind system and deterioration of substrates.

C. Prepare and clean substrates to comply with system manufacturer's written requirements to obtain optimum bond between substrate and adhesive for insulation.

3.02 INSTALLATION

A. Comply with ASTM C1397 and system manufacturer's written instructions for installation of system as applicable to each type of substrate indicated.

B. Apply flashing, vapor barrier and drainage matt as required. Apply trim accessories at perimeter of system, at expansion joints, and elsewhere, as indicated. Use drip screed at bottom edge of system, unless otherwise indicated. Use casing beads at other locations.

C. Adhesively attach insulation to comply with ASTM C1397, system manufacturer's written requirements, and following:

1. Allow adhered insulation to remain undisturbed for period recommended by system manufacturer, but not less than 24 hrs., before installing mechanical fasteners, beginning rasping and sanding insulation, or applying base coat and reinforcing mesh.
2. Apply insulation boards over dry substrates in courses with long edges oriented horizontally in manner as recommended by manufacturer.
3. Interlock ends at internal and external corners.

4. Abut boards tightly at joints within and between each course to produce flush, continuously even surfaces without gaps or raised edges between insulation boards. If gaps greater than 1/16 in. (1.6 mm) occur, fill with insulation cut to fit gaps exactly; insert insulation without using adhesive or other material.
5. Cut insulation to fit openings, corners, and projections precisely and to produce edges and shapes complying with details indicated.
6. Rasp or sand flush entire surface of insulation to remove irregularities projecting more than 1/32 in. (0.8 mm) from surface of insulation and to remove yellowed areas due to sun exposure; do not create depressions deeper than 1/16 in. (1.6 mm).
7. Interrupt insulation for expansion joints where indicated.
8. Form joints for sealant application by leaving gaps between adjoining insulation edges and between insulation edges and dissimilar adjoining surfaces. Make gaps wide enough to produce joint widths indicated after encapsulating joint substrates with base coat and reinforcing mesh.
9. Treat exposed edges of insulation board as follows:

    a. Wrap edges after installing insulation board and before applying field-applied reinforcing mesh.
    b. Wrap mesh of width required to extend not less than 2-1/2 in. (63 mm) onto substrate behind insulation board, cover insulation board edge, and extend not less than 2-1/2 in. (63 mm) onto insulation board face.
    c. Wrap edges of insulation board, except those forming substrates of sealant joints, by encapsulating with base coat, reinforcing mesh, and finish coat.
    d. Wrap edges of insulation board forming substrates of sealant joints within system or between system and other work by encapsulating with base coat and reinforcing mesh.

10. Treat edges of insulation board at trim accessories by extending base coat, reinforcing mesh, and finish coat over face leg of accessories.
11. Coordinate flashing installation with installation of insulation to produce wall system that does not allow water to penetrate behind protective coating.

D. Install trim accessories at locations indicated according to system manufacturer's written instructions.

E. Install expansion joints where required by system manufacturer.

F Apply base coat to exposed surfaces of insulation in minimum thickness specified by system manufacturer.

G Embed impact resistant reinforcing mesh in wet base coat to produce wrinkle-free installation with mesh continuous at corners treated at joints to comply with system manufacturer's written requirements

H. Double-Layer Application: Around penetrations, seams and openings, apply second base coat and second layer of reinforcing mesh of weight in same manner as first application. Do not apply until first base coat has cured.

I Apply finish coat over base coat in thickness required by system manufacturer to produce a uniform finish of texture and color selected.

3.05 INSTALLATION OF JOINT SEALANTS

A. Prepare joints and apply sealants, of type and at locations indicated, to comply with applicable requirements in "EIMA Guide for Use of Sealants with Exterior Insulation and Finish Systems, Class PB."

3.07 CLEANING AND PROTECTING

A. Remove temporary covering and protection of other work. Promptly remove coating materials from window and door frames and other surfaces outside areas indicated to receive system coatings.

B. Provide final protection and maintain conditions, in manner acceptable to Installer and system manufacturer that ensure system is without damage or deterioration at time of Substantial Completion.

END OF SECTION

SECTION 07 42 13

EXTERIOR METAL WALL PANELS

PART 1 - GENERAL

1.01 DESCRIPTION:

1.02 DEFINITIONS:

A. Metal Wall Panel Assembly: Metal wall panels, attachment system components, miscellaneous metal framing, and accessories necessary for a complete weathertight wall system.

1.03 PERFORMANCE REQUIREMENTS:

A. Identification:

1. Identify metal wall panels that are usable for repairs shown on drawings and for future Owner maintenance. Review panels with Owner and Engineer and dispose of excess stock. Panel fasteners will not be salvaged.

2. Identify existing wall panel material, gauge and finishes.

3. Identify existing wall panel manufacturer.

B. General Performance: Metal wall panel assemblies shall comply with current industry performance requirements

C. Air Infiltration: Air leakage through assembly of not more than 0.06 cfm/sq. ft. (0.3 L/s per sq. m) of wall area when tested according to ASTM E283 at the following test-pressure difference:

1. Test-Pressure Difference: 1.57 lbf/sq. ft. (75 Pa).

D. Water Penetration under Static Pressure: No water penetration when tested according to ASTM E331 at the following test-pressure difference:

1. Test-Pressure Difference: 6.24 lbf/sq. ft. (300 Pa).

E. Water Penetration under Dynamic Pressure: No evidence of water leakage when tested according to AAMA 501.1 under dynamic pressure equal to 20 percent of inward-acting, wind-load design pressure of not less than 6.24 lbf/sq. ft. (300 Pa) and not more than 12 lbf/sq. ft. (575 Pa).

1. Water Leakage: As defined according to AAMA 501.1.

2. Water Leakage: Uncontrolled water infiltrating the system or appearing on system's normally exposed interior surfaces from sources other than condensation. Water controlled by flashing and gutters that is drained back to the exterior and cannot damage adjacent materials or finishes is not water leakage.

F. Structural Performance: Provide metal wall panel assemblies capable of withstanding the effects of the following loads and stresses within limits and under conditions indicated, based on testing according to ASTM E330:

1. Wind Loads: As shown on drawings.

2. Deflection Limits: Metal plate wall panel assemblies shall withstand wind loads with horizontal deflections no greater than 1/240 of the span.

G. Thermal Movements: Allow for thermal movements from ambient and surface temperature changes by preventing buckling, opening of joints, overstressing of components, failure of joint sealants, failure of connections, and other detrimental effects. Base calculations on surface temperatures of materials due to both solar heat gain and nighttime-sky heat loss.

1. Temperature Change (Range): 120 degrees F (67 degrees C), ambient; 180 degrees F (100 degrees C), material surfaces.

1.04 SUBMITTALS:

A. Submit the following shop drawings in accordance with Section 01 33 00.

B. Product Data:

1. Existing wall panel information noted above.

C. Shop Drawings: Show fasteners, accessories and construction details for reusing existing panels including details of edge conditions, joints, panel profiles, corners, anchorages, attachment system, trim, flashings, closures, and accessories; and special details.

D. Coordination Drawings: Exterior elevations, drawn to scale, on which the following items are shown and coordinated with each other, using input from installers of the items involved:

1. Metal wall panels and attachments.

2. New framing.

3. Wall-mounted items including doors, windows, louvers, and lighting fixtures.

4. Penetrations of wall by pipes and utilities.

E. Maintenance Data: For metal wall panels to include in maintenance manuals.

1.05 QUALITY ASSURANCE:

A. Installer Qualifications: An employer of workers trained and approved by panel manufacturer or with 10 years of documented experience with similar metal wall panel systems within 100 miles of the project site.

B. Source Limitations: Obtain fasteners and accessories compatible with existing wall panels from single source from single manufacturer.

C. Preconstruction Compatibility and Adhesion Testing: Submit samples of materials that will contact joint sealants to joint-sealant manufacturers for testing indicated below:

1. Use manufacturer's standard test methods to determine whether priming and other specific joint preparation techniques are required to obtain rapid, optimum adhesion of joint sealants to joint substrates.

a. Perform tests under environmental conditions replicating those that will exist during installation.

2. Submit no fewer than nine pieces of each type of material, including joint substrates, shims, joint-sealant backings, secondary seals, and miscellaneous materials.

3. Schedule enough time for testing and analyzing results to prevent delaying the Work.

4. For materials failing tests, obtain joint-sealant manufacturer's written instructions for corrective measures, including use of specially formulated primers.

D. Preinstallation Conference: Conduct conference at Project site.

1. Meet with Owner, Engineer, Owner's insurer if applicable, metal wall panel Installer and installers whose work interfaces with or affects panels including installers of doors, windows, and louvers.

2. Review and finalize construction schedule and verify availability of materials, Installer's personnel, equipment, and facilities needed to make progress and avoid delays.

3. Review methods and procedures related to metal wall panel installation, including manufacturer's written instructions.

4. Examine support conditions for compliance with requirements, including alignment between and attachment to structural members.

5. Review flashings, special siding details, wall penetrations, openings, and condition of other construction that will affect metal plate wall panels.

6. Review governing regulations and requirements for insurance, certificates, and tests and inspections if applicable.

7. Review temporary protection requirements for metal wall panel assembly during and after installation.

8. Review metal wall panel observation and repair procedures after installation.

1.06 DELIVERY STORAGE AND HANDLING:

A. Comply with the requirements specified in Section 01 66 10.

B. Deliver components and other manufactured items so as not to be damaged or deformed. Package panels for protection during transportation and handling.

C. Unload, store, and erect salvaged metal wall panels in a manner to prevent bending, warping, twisting, and surface damage.

1.07 PROJECT/SITE CONDITIONS:

A. Weather Limitations: Proceed with installation only when existing and forecasted weather conditions permit assembly of metal wall panels to be performed according to manufacturer's written instructions and warranty requirements.

B. Field Measurements: Verify locations of structural members and wall opening dimensions by field measurements before metal wall panel fabrication and indicate measurements on Shop Drawings.

1.08 COORDINATION:

A. Coordinate metal wall panel assemblies with rain drainage work, flashing, trim, and construction of studs, soffits, and other adjoining work to provide a leakproof, secure, and noncorrosive installation.

PART 2 - PRODUCTS

2.01 PANEL MATERIALS:

A. Wall Panels: As salvaged, examined and approved for use.

B. Panel Sealant: ASTM C920; elastomeric polyurethane, polysulfide, or silicone sealant; of type, grade, class, and use classifications required to seal joints in metal wall panels and remain weathertight; and as recommended in writing by sealant manufacturer.

2.02 MISCELLANEOUS METAL FRAMING:

A. Miscellaneous Metal Framing, General: See Section 05 40 00 Cold Formed Metal Framing.

2.03 MISCELLANEOUS MATERIALS:

A. Panel Fasteners: Self-tapping screws; bolts and nuts; self-locking rivets and bolts; end-welded studs; and other suitable fasteners designed to withstand design loads that matches and are compatible with existing wall panel assembly

2.04 METAL PLATE WALL PANELS :

A. Metal Plate Panels: Salvaged examined and approved factory-formed, metal wall panels fabricated from single sheets of metal formed into profile. Include new attachment system components, panel stiffeners, and accessories required for weathertight system.

1. Products: Salvaged

B. Attachment System Components: New products compatible with existing wall panel syste.

1. Provide drainage system to match existing installation.

2. Include framing as required including subgirts, perimeter extrusions, tracks, drainage channels, panel stiffeners, panel clips and anchor channels.

3. Alignment Pins: Stainless steel.

2.05 ACCESSORIES:

A. Metal Wall Panel Accessories: Provide components required for a complete metal wall panel assembly including trim, copings, fasciae, mullions, sills, corner units, clips, flashings, sealants, gaskets, fillers, closure strips, and similar items. Match material and finish of panels unless otherwise indicated.

B. Flashing and Trim: Same material, finish, and color as adjacent metal plate wall panels, minimum 0.030 inch (0.76 mm) thick unless otherwise indicated.

2.06 FABRICATION:

A. General: Prepare salvaged metal wall panels for use to match existing installation. Fabricate and finish accessories at the factory to greatest extent possible, by manufacturer's standard procedures and processes, as necessary to fulfill indicated performance requirements demonstrated by laboratory testing. Comply with indicated profiles and with dimensional and structural requirements.

B. Prepare and install metal wall panels in a manner that eliminates condensation on interior side of panel and with joints between panels designed to form weathertight seals.

C. Metal Wall Panels: Prepare salvaged panels with panel stiffeners as required to comply with deflection limits. Weld and grind panel corners smooth. Panels to meet the following dimensional tolerances (match existing as a minimum):

1. Length and Width: +/-0.032 inch (0.81 mm) up to 48 inches (1219 mm); 0.064 inch (1.63 mm) more than 48 inches (1219 mm).

2. Diagonal: +/-0.1875 inch (4.76 mm).

3. Panel Bow: Not more than 0.2 percent of panel width or length up to 0.1875-inch (4.76 mm) maximum.

4. Squareness: 0.1875-inch (4.76-mm) difference between diagonal measurements.

5. Camber: 0.032 inch (0.81 mm).

D. Sheet Metal Accessories: Fabricate flashing and trim to comply with recommendations in SMACNA's "Architectural Sheet Metal Manual" that apply to design, dimensions, metal, and other characteristics of item indicated.

1. Form exposed sheet metal accessories that are without excessive oil canning, buckling, and tool marks and that are true to line and levels indicated, with exposed edges folded back to form hems.

2. Seams for Aluminum: Fabricate nonmoving seams with flat-lock seams. Form seams and seal with epoxy seam sealer. Rivet joints for additional strength.

3. Seams for Other Than Aluminum: Fabricate nonmoving seams in accessories with flat-lock seams. Tin edges to be seamed, form seams, and solder.

4. Sealed Joints: Form nonexpansion but movable joints in metal to accommodate elastomeric sealant to comply with SMACNA standards.

5. Conceal fasteners and expansion provisions where possible. Exposed fasteners are not allowed on faces of accessories exposed to view.

6. Fabricate cleats and attachment devices from same material as accessory being anchored or from compatible, noncorrosive metal recommended by metal plate wall panel manufacturer.

a. Size: As recommended by SMACNA's "Architectural Sheet Metal Manual" or metal plate wall panel manufacturer for application, but not less than thickness of metal being secured.

2.07 GENERAL FINISH REQUIREMENTS:

A. Comply with NAAMM's "Metal Finishes Manual for Architectural and Metal Products" for recommendations for applying and designating finishes.

B. Protect mechanical and painted finishes on exposed surfaces from damage by applying a strippable, temporary protective covering before shipping.

C. Appearance of Finished Work: Noticeable variations in same piece are not acceptable. Variations in appearance of abutting or adjacent pieces are acceptable if they are within one-half of the range of accepted Samples. Variations in appearance of other components are acceptable if they are within the range of accepted Samples and are assembled or installed to minimize contrast.

PART 3 - EXECUTION

3.01 EXAMINATION:

A. Examine substrates, areas, and conditions, with Installer present, for compliance with requirements for installation tolerances, metal wall panel supports, and other conditions affecting performance of the Work.

1. Examine wall framing to verify that girts, angles, channels, studs, and other structural panel support members and anchorage have been installed within alignment tolerances required by metal wall panel industry standards.

2. Examine wall sheathing to verify that sheathing joints are supported by framing or blocking and that installation is within flatness tolerances required by metal plate wall manufacturer.

B. Examine roughing-in for components and systems penetrating metal plate wall panels to verify actual locations of penetrations relative to seam locations of panels before installation.

C. For the record, prepare written report, endorsed by Installer, listing conditions detrimental to performance of the Work.

D. Proceed with installation only after unsatisfactory conditions have been corrected.

3.02 PREPARATION:

A. Miscellaneous Framing: Install subgirts, base angles, sills, furring, and other miscellaneous metal plate wall panel support members and anchorage according to ASTM C754 and panel manufacturer's written instructions.

3.03 METAL WALL PANEL INSTALLATION:

A. General: Install metal plate wall panels according to industry standards and to match existing in orientation, sizes, and locations indicated on Drawings. Install panels perpendicular to girts and subgirts unless otherwise indicated. Anchor panels and other components of the Work securely in place, with provisions for thermal and structural movement.

1. Shim or otherwise plumb substrates receiving metal wall panels.

2. Flash and seal metal wall panels with weather closures at perimeter of all openings. Do not begin installation until weather barrier and flashings that will be concealed by panels are installed.

3. Install flashing and trim as metal wall panel work proceeds.

4. Apply elastomeric sealant continuously as necessary for waterproofing.

5. Provide weathertight escutcheons for pipe and conduit penetrating exterior walls.

B. Fasteners:

1. Metal Wall Panels: Match existing.

C. Metal Protection: Where dissimilar metals will contact each other or corrosive substrates, protect against galvanic action as recommended by metal wall panel manufacturer.

D. Joint Sealers: Install gaskets, joint fillers, and sealants where indicated and where required for weathertight performance of metal plate panel assemblies. Provide types of gaskets, fillers, and sealants indicated or, if not indicated, types recommended by panel manufacturer.

1. Seal metal wall panel end laps with double beads of sealant, full width of panel. Seal side joints where recommended by panel manufacturer.

2. Prepare joints and apply sealants to comply with requirements in Division 07 "Joint Sealants" Section and as noted herein.

E. Attachment System, General: Install attachment system required to support metal wall panels and to provide a complete weathertight wall system, including subgirts, perimeter extrusions, tracks, drainage channels, panel clips, and anchor channels.

1. Include attachment to supports, panel-to-panel joinery, panel-to-dissimilar-material joinery, and panel-system joint seals.

F. Flange-Attachment Installation: Attach metal plate wall panels, formed with extended perimeter flanges, to supports at locations, spacings, and with fasteners recommended by manufacturer.

1. Seal horizontal and vertical joints between adjacent panels with sealant backing and sealant. Install sealant backing and sealant according to requirements specified in Division 07 "Joint Sealants" Section.

2. Seal horizontal and vertical joints between adjacent panels with manufacturer's standard gaskets.

G. Clip Installation: Attach panel clips to supports at locations, spacings, and with fasteners recommended by manufacturer. Attach flanges of metal plate wall panels to panel clips with fasteners as recommended by industry standards..

1. Seal horizontal and vertical joints between adjacent metal plate wall panels with sealant backing and sealant. Install sealant backing and sealant according to requirements specified in Division 07 "Joint Sealants" Section.

2. Seal horizontal and vertical joints between adjacent metal plate wall panels with manufacturer's standard gaskets.

H. Subgirt-and-Spline Installation: Provide manufacturer's standard subgirts and splines that provide support and complete secondary drainage system, draining to the exterior at horizontal joints. Install support system at locations, spacings, and with fasteners recommended by manufacturer. Attach metal plate wall panels by interlocking perimeter extrusions attached to panels with subgirts and splines. Fully engage integral subgirt-and-spline gaskets and leave horizontal and vertical joints with open reveal. Terminate edge of panels flush with perimeter extrusions.

1. Install metal plate wall panels to allow individual panels to be installed and removed without disturbing adjacent panels.

2. Do not apply sealants to joints unless otherwise indicated on Drawings.

3.04 TRACK-SUPPORT INSTALLATION: PROVIDE STANDARD HORIZONTAL TRACKS AND VERTICAL TRACKS/DRAIN CHANNELSTHAT MATCH EXISTING.ACCESSORY INSTALLATION:

A. General: Install accessories with positive anchorage to building and weathertight mounting and provide for thermal expansion. Coordinate installation with flashings and other components.

1. Install components required for a complete metal wall panel assembly including trim, copings, corners, seam covers, flashings, sealants, gaskets, fillers, closure strips, and similar items.

B. Flashing and Trim: Comply with performance requirements, manufacturer's written installation instructions, and SMACNA's "Architectural Sheet Metal Manual." Provide concealed fasteners where possible and set units true to line and level as indicated. Install work with laps, joints, and seams that will be permanently watertight and weather resistant.

1. Install exposed flashing and trim that is without excessive oil canning, buckling, and tool marks and that is true to line and levels indicated, with exposed edges folded back to form hems. Install sheet metal flashing and trim to fit substrates and to result in waterproof and weather-resistant performance.

2. Expansion Provisions: Provide for thermal expansion of exposed flashing and trim. Space movement joints at a maximum of 10 feet (3 m) with no joints allowed within 24 inches (600 mm) of corner or intersection. Where lapped expansion provisions cannot be used or would not be sufficiently weather resistant and waterproof, form expansion joints of intermeshing hooked flanges, not less than 1 inch (25 mm) deep, filled with mastic sealant (concealed within joints).

3.05 ERECTION TOLERANCES:

A. Installation Tolerances: Shim and align metal plate wall panel units within installed tolerance of 1/4-inch in 20 feet (6 mm in 6 m), nonaccumulative, on level, plumb, and location lines as indicated and within 1/8-inch (3-mm) offset of adjoining faces and of alignment of matching profiles.

3.06 FIELD QUALITY CONTROL:

A. Water Penetration: Test a minimum of two areas of installed system as directed by the Engineer for compliance with system performance requirements according to ASTM E1105 at minimum differential pressure of 20 percent of inward-acting, wind-load design pressure as defined by SEI/ASCE 7, but not less than 6.24 lbf/sq. ft. (300 Pa).

B. Salvaged metal wall panels will be considered defective if they do not pass tests and inspections.

C. Additional tests and inspections, at Contractor's expense, will be performed to determine compliance of replaced or additional work with specified requirements.

3.07 CLEANING:

A. Clean all existing building finished surfaces with soap and water solution as recommended by industry standards at wateat completion of exterior work.

3.08 CLOSEOUT ACTIVITIES:

A. Provide in accordance with Section 01 77 00.

END OF SECTION

SECTION 07 60 00

SHEET METAL FLASHING AND TRIM

PART 1 - GENERAL

1.01 DESCRIPTION:

A. Provide sheet wall flashing and trim as shown on drawings and indicated and in compliance with Contract Documents.

1. Section Includes:

a. Formed Products:

(1) Formed wall sheet metal fabrications.

1.02 REFERENCES:

A. Aluminum Association (AA):

1. AA-M12C22A41: Anodized Plus Finish

2. M12C22A42/A44: Mechanical Finish

B. American Architectural Manufacturers Association (AAMA):

1. 611: Voluntary Specification for Anodized Architectural Aluminum

2. 621: Voluntary Specifications for High Performance Organic Coatings on Coil Coated Architectural Hot Dipped Galvanized (HDG) and Zinc-Aluminum Coated Steel Substrates

C. ASTM International (ASTM):

1. A153/A153M: Standard Specification for Zinc Coating (Hot-Dip) on Iron and Steel Hardware.

2. A653/A653M: Standard Specification for Steel Sheet, Zinc-Coated (Galvanized) or Zinc-Iron Alloy-Coated (Galvannealed) by the Hot-Dip Process.

3. A666: Standard Specification for Annealed or Cold-Worked Austenitic Stainless-Steel Sheet, Strip, Plate, and Flat Bar.

4. A755/A755M: Standard Specification for Steel Sheet, Metallic Coated by the Hot-Dip Process and Prepainted by the Coil-Coating Process for Exterior Exposed Building Products

5. A792/A792M: Standard Specification for Steel Sheet, 55% Aluminum-Zinc Alloy-Coated by the Hot-Dip Process

6. B32: Standard Specification for Solder Metal.

7. B69: Standard Specification for Rolled Zinc

8. B209/B209M: Standard Specification for Aluminum and Aluminum-Alloy Sheet and Plate

9. C920: Standard Specification for Elastomeric Joint Sealants.

10. D2244: Standard Practice for Calculation of Color Tolerances and Color Differences from Instrumentally Measured Color Coordinates

11. D4214: Standard Test Methods for Evaluating the Degree of Chalking of Exterior Paint Films

12. D4397: Standard Specification for Polyethylene Sheeting for Construction, Industrial, and Agricultural Applications.

13. F2329: Standard Specification for Zinc Coating, Hot-Dip, Requirements for Application to Carbon and Alloy Steel Bolts, Screws, Washers, Nuts, and Special Threaded Fasteners

E. NAAMM's "Metal Finishes Manual for Architectural and Metal Products.

F. Sheet Metal and Air Conditioning Contractors Association (SMACNA).

1. Architectural Sheet Metal Manual.

1.03 PERFORMANCE REQUIREMENTS:

A. General: Sheet metal flashing and trim assemblies as indicated shall withstand wind loads, structural movement, thermally induced movement, and exposure to weather without failure due to defective manufacture, fabrication, installation, or other defects in construction. Completed sheet metal flashing and trim shall not rattle, leak, or loosen, and shall remain watertight.

B. Thermal Movements: Provide sheet metal flashing and trim that allows for thermal movements from ambient and surface temperature changes.

1. Temperature Change (Range): 120 degrees F (67 degrees C), ambient; 180 degrees F (100 degrees C) material surfaces.

1.04 SUBMITTALS:

A. Submit the following shop drawings in accordance with Section 01 33 00.

B. Product Data: For each type of product indicated. Include construction details, material descriptions, dimensions of individual components and profiles, and finishes for each manufactured product and accessory.

C. Shop Drawings: Show fabrication and installation layouts of sheet metal flashing and trim, including plans, elevations, expansion-joint locations, and keyed details. Distinguish between shop- and field-assembled work. Include the following:

1. Identification of material, thickness, weight, and finish for each item and location in Project.

2. Details for forming sheet metal flashing and trim, including profiles, shapes, seams, and dimensions.

3. Details for joining, supporting, and securing sheet metal flashing and trim, including layout of fasteners, cleats, clips, and other attachments. Include pattern of seams.

4. Details of termination points and assemblies, including fixed points.

5. Details of expansion joints and expansion-joint covers, including showing direction of expansion and contraction.

6. Details of edge conditions, including flashing and counterflashings as applicable.

7. Details of special conditions.

8. Details of connections to adjoining work.

9. Details as shown on drawings.

D. Qualification Data: For qualified fabricator.

E. Maintenance Data: For sheet metal flashing, trim, and accessories to include in maintenance manuals.

1.05 QUALITY ASSURANCE:

A. Comply with the requirements specified in Section 01 43 00.

B. Fabricator Qualifications: Shop that employs skilled workers who custom fabricate sheet metal flashing and trim similar to that required for this Project and whose products have a record of successful in-service performance.

C. Sheet Metal Flashing and Trim Standard: Comply with SMACNA's "Architectural Sheet Metal Manual" unless more stringent requirements are specified or shown on Drawings.

D. Preinstallation Conference: Conduct conference at Project site

1. Meet with Owner, Engineer, Owner's insurer if applicable, Installer, and installers whose work interfaces with or affects sheet metal flashing and trim.

2. Review methods and procedures related to sheet metal flashing and trim.

3. Examine substrate conditions for compliance with requirements, including flatness and attachment to structural members.

4. Review construction that will affect sheet metal flashing.

5. Document proceedings, including corrective measures and actions required, and furnish copy of record to each participant.

1.06 DELIVERY STORAGE AND HANDLING:

A. Deliver sheet metal flashing materials and fabrications undamaged. Protect sheet metal flashing and trim materials and fabrications during transportation and handling.

B. Unload, store, and install sheet metal flashing materials and fabrications in manner to prevent bending, warping, twisting, and surface damage.

C. Stack materials on platforms or pallets, covered with suitable weathertight and ventilated covering. Do not store sheet metal flashing and trim materials in contact with other materials that might cause staining, denting, or other surface damage.

D. Protect strippable protective covering on sheet metal flashing and trim from exposure to sunlight and high humidity, except to the extent necessary for the period of sheet metal flashing and trim installation.

1.07 COORDINATION:

A. Coordinate installation of sheet metal flashing and trim with interfacing and adjoining construction to provide leakproof, secure, and noncorrosive installation.

1.08 PROJECT/SITE CONDITIONS:

A. Protect exposed finishes against construction damage; remove protection prior to final acceptance.

1.09 WARRANTY:

A. Special Warranty on Finishes: Manufacturer's standard form in which manufacturer agrees to repair finish or replace sheet metal flashing and trim that shows evidence of deterioration of factory-applied finishes within specified warranty period.

1. Exposed Panel Finish: Deterioration includes, but is not limited to, the following:

a. Color fading more than 5 Hunter units when tested according to ASTM D2244.

b. Chalking in excess of a No. 8 rating when tested according to ASTM D4214.

c. Cracking, checking, peeling, or failure of paint to adhere to bare metal.

2. Finish Warranty Period: 20 years from date of Substantial Completion.

PART 2 - PRODUCTS

2.01 SHEET METALS:

A. General: Protect mechanical and other finishes on exposed surfaces from damage by applying a strippable, temporary protective film before shipping.

B. Aluminum Sheet: ASTM B209/B209M, alloy as standard with manufacturer for finish required, with temper as required to suit forming operations and performance required.

1. As-Milled Finish: Millfinish.

2. Surface: Smooth, flat.

3. Factory Prime Coating: Where painting after installation is indicated, pretreat with white or light-colored, factory-applied, baked-on epoxy primer coat; minimum dry film thickness of 0.2 mil (0.005 mm).

4. Clear Anodic Finish Coil Coated: AAMA 611, AA-M12C22A41, Class I, 0.018 mm or thicker.

5. Exposed Coil-Coated Finishes:

a. Two-Coat Fluoropolymer: AAMA 620. Fluoropolymer finish containing not less than 70 percent PVDF resin by weight in color coat. Prepare, pretreat, and apply coating to exposed metal surfaces to comply with coating and resin manufacturers' written instructions.

b. Color:

D. As selected by Engineer from manufacturer's full range.Metallic-Coated Steel Sheet: Restricted flatness steel sheet, metallic coated by the hot-dip process and prepainted by the coil-coating process to comply with ASTM A755/A755M.

2.02 MISCELLANEOUS MATERIALS:

A. General: Provide materials and types of fasteners, solder, welding rods, protective coatings, separators, sealants, and other miscellaneous items as required for complete sheet metal flashing and trim installation unless otherwise indicated.

B. Sealant Tape: Pressure-sensitive, 100 percent solids, gray polyisobutylene compound sealant tape with release-paper backing. Provide permanently elastic, nonsag, nontoxic, nonstaining tape 1/2-inch (13 mm) wide and 1/8-inch (3 mm) thick.

C. Elastomeric Sealant: ASTM C920, elastomeric polyurethanepolymer sealant; low modulus; of type, grade, class, and use classifications required to seal joints in sheet metal flashing and trim and remain watertight.

D. Butyl Sealant: ASTM C1311, single-component, solvent-release butyl rubber sealant; polyisobutylene plasticized; heavy bodied for hooked-type expansion joints with limited movement.

E. Epoxy Seam Sealer: Two-part, noncorrosive, aluminum seam-cementing compound, recommended by aluminum manufacturer for exterior nonmoving joints, including riveted joints.

F. Bituminous Coating: Cold-applied asphalt emulsion complying with ASTM D1187.

G. Asphalt Roofing Cement: ASTM D4586, asbestos free, of consistency required for application.

2.03 FABRICATION, GENERAL:

A. General: Custom fabricate sheet metal flashing and trim to comply with recommendations in SMACNA's "Architectural Sheet Metal Manual" that apply to design, dimensions, geometry, metal thickness, and other characteristics of item indicated. Fabricate items at the shop to greatest extent possible.

1. Fabricate sheet metal flashing and trim in thickness or weight needed to comply with performance requirements, but not less than that specified for each application and metal.

2. Obtain field measurements for accurate fit before shop fabrication.

3. Form sheet metal flashing and trim without excessive oil canning, buckling, and tool marks and true to line and levels indicated, with exposed edges folded back to form hems.

4. Conceal fasteners and expansion provisions where possible. Exposed fasteners are not allowed on faces exposed to view.

B. Fabrication Tolerances: Fabricate sheet metal flashing and trim that is capable of installation to a tolerance of 1/4-inch in 20 feet (6 mm in 6 m) on slope and location lines as indicated and within 1/8-inch (3-mm) offset of adjoining faces and of alignment of matching profiles.

C. Fabrication Tolerances: Fabricate sheet metal flashing and trim that is capable of installation to tolerances specified in MCA's "Guide Specification for Residential Metal Roofing."

D. Sealed Joints: Form nonexpansion but movable joints in metal to accommodate elastomeric sealant.

E. Expansion Provisions: Where lapped expansion provisions cannot be used, form expansion joints of intermeshing hooked flanges, not less than 1 inch (25 mm) deep, filled with butyl sealant concealed within joints.

F. Fabricate cleats and attachment devices from same material as accessory being anchored or from compatible, noncorrosive metal.

G. Fabricate cleats and attachment devices of sizes as recommended by SMACNA's "Architectural Sheet Metal Manual"for application, but not less than thickness of metal being secured.

H. Seams: Fabricate nonmoving seams with flat-lock seams. Tin edges to be seamed, form seams, and solder.

I. Seams: Fabricate nonmoving seams with flat-lock seams. Form seams and seal with elastomeric sealant unless otherwise recommended by sealant manufacturer for intended use. Rivet joints where necessary for strength.

J. Seams for Aluminum: Fabricate nonmoving seams with flat-lock seams. Form seams and seal with epoxy seam sealer. Rivet joints where necessary for strength.

K. Do not use graphite pencils to mark metal surfaces.

1. Insert thickness> thick.

2.04 WALL SHEET METAL FABRICATIONS:

A. Opening Flashings: Fabricate head, sill, jamb, and similar flashings to extend 4 inches (100 mm) beyond wall openings. Form head and sill flashing with 2-inch- (50-mm-) high, end dams. Fabricate from the following materials:

1. Aluminum: 0.032 inch (0.81 mm) thick.

2. Galvanized Steel: 0.022 inch (0.56 mm) thick.

PART 3 - EXECUTION

3.01 EXAMINATION:

A. Examine substrates, areas, and conditions, with Installer present, to verify actual locations, dimensions and other conditions affecting performance of the Work.

1. Verify compliance with requirements for installation tolerances of substrates.

2. Verify that substrate is sound, dry, smooth, clean, sloped for drainage, and securely anchored.

B. For the record, prepare written report, endorsed by Installer, listing conditions detrimental to performance of the Work.

C. Proceed with installation only after unsatisfactory conditions have been corrected.

3.02 UNDERLAYMENT INSTALLATION:

A. General: Install underlayment as indicated on Drawings.

3.03 INSTALLATION, GENERAL:

A. General: Anchor sheet metal flashing and trim and other components of the Work securely in place, with provisions for thermal and structural movement. Use fasteners, solder, welding rods, protective coatings, separators, sealants, and other miscellaneous items as required to complete sheet metal flashing and trim system.

1. Install sheet metal flashing and trim true to line and levels indicated. Provide uniform, neat seams with minimum exposure of solder, welds, and sealant.

2. Install sheet metal flashing and trim to fit substrates and to result in watertight performance. Verify shapes and dimensions of surfaces to be covered before fabricating sheet metal.

3. Space cleats not more than 12 inches (300 mm) apart. Anchor each cleat with two fasteners. Bend tabs over fasteners.

4. Install exposed sheet metal flashing and trim without excessive oil canning, buckling, and tool marks.

5. Install sealant tape where indicated.

6. Torch cutting of sheet metal flashing and trim is not permitted.

7. Do not use graphite pencils to mark metal surfaces.

B. Metal Protection: Where dissimilar metals will contact each other or corrosive substrates, protect against galvanic action by painting contact surfaces with bituminous coating or by other permanent separation as recommended by SMACNA.

C. Expansion Provisions: Provide for thermal expansion of exposed flashing and trim. Space movement joints at a maximum of 10 feet (3000 mm) with no joints allowed within 24 inches (600 mm) of corner or intersection. Where lapped expansion provisions cannot be used or would not be sufficiently watertight, form expansion joints of intermeshing hooked flanges, not less than 1 inch (25 mm) deep, filled with sealant concealed within joints.

D. Fastener Sizes: Use fasteners of sizes that will penetrate substrate.

E. Seal joints as shown and as required for watertight construction.

1. Prepare joints and apply sealants to comply with requirements in Division 07 Section "Joint Sealants."

3.04 WALL FLASHING INSTALLATION:

A. General: Install sheet metal wall flashing to intercept and exclude penetrating moisture according to SMACNA recommendations and as indicated. Coordinate installation of wall flashing with installation of wall-opening components such as windows, doors, and louvers.

B. Through-Wall Flashing: Installation of through-wall flashing is specified in Division 04 Section "Unit Masonry."

C. Reglets: Installation of reglets is specified in Division 04 "Unit Masonry" Section.

D. Opening Flashings in Frame Construction: Install continuous head, sill,[jamb, and similar flashings to extend beyond wall openings.

3.05 ERECTION TOLERANCES:

A. Installation Tolerances: Shim and align sheet metal flashing and trim within installed tolerance of 1/4-inch in 20 feet (6 mm in 6 m) on slope and location lines as indicated and within 1/8-inch (3 mm) offset of adjoining faces and of alignment of matching profiles.

B. Installation Tolerances: Shim and align sheet metal flashing and trim within installed tolerances specified in MCA's "Guide Specification for Residential Metal Roofing."

3.06 CLEANING AND PROTECTION:

A. Clean exposed metal surfaces of substances that interfere with uniform oxidation and weathering.

B. Clean and neutralize flux materials. Clean off excess solder.

C. Clean off excess sealants.

D. Remove temporary protective coverings and strippable films as sheet metal flashing and trim are installed unless otherwise indicated in manufacturer’s written installation instructions. On completion of installation, remove unused materials and clean finished surfaces. Maintain in a clean condition during construction.

E. Replace sheet metal flashing and trim that have been damaged or that have deteriorated beyond successful repair by finish touchup or similar minor repair procedures.

3.07 CLOSEOUT ACTIVITIES:

A. Provide in accordance with Section 01 77 00.

END OF SECTION

SECTION 07 92 00

JOINT SEALANTS

PART 1 - GENERAL

1.01 DESCRIPTION:

A. Provide joint sealants as indicated and in compliance with Contract Documents.

1. Section Includes:

a. Urethane joint sealants.

1.02 REFERENCES:

A. ASTM International (ASTM):

1. C834: Standard Specification for Latex Sealing Compounds.

2. C919: Standard Practice for Use of Sealants in Acoustical Applications.

3. C920: Standard Specification for Elastomeric Joint Sealants.

4. C1021: Standard Practice for Laboratories Engaged in Testing of Building Sealants.

5. C1193: Standard Guide for Use of Joint Sealants.

6. C1248: Standard Test Method for Staining of Porous Substrate by Joint Sealants.

7. C1311: Standard Specification for Solvent Release Sealants.

8. C1330: Standard Specification for Cylindrical Sealant Backing for Use with Cold Liquid- Applied Sealants.

9. C1521: Standard Practice for Evaluating Adhesion of Installed Weatherproofing Sealant Joints.

1.03 PRECONSTRUCTION TESTING:

A. Preconstruction Compatibility and Adhesion Testing: Submit to joint-sealant manufacturers, for testing indicated below, samples of materials that will contact or affect joint sealants.

1. Use manufacturer's standard test method to determine whether priming and other specific joint preparation techniques are required to obtain rapid, optimum adhesion of joint sealants to joint substrates.

2. Submit not fewer than eight pieces of each kind of material, including joint substrates, shims, joint-sealant backings, secondary seals, and miscellaneous materials.

3. Schedule sufficient time for testing and analyzing results to prevent delaying the Work.

4. For materials failing tests, obtain joint-sealant manufacturer's written instructions for corrective measures including use of specially formulated primers.

5. Testing will not be required if joint-sealant manufacturers submit joint preparation data that are based on previous testing, not older than 24 months, of sealant products for adhesion to, and compatibility with, joint substrates and other materials matching those submitted.

1.04 SUBMITTALS

A. Product Data: For each joint-sealant product indicated.

B. Samples for Initial Selection: Manufacturer's color charts consisting of strips of cured sealants showing the full range of colors available for each product exposed to view.

C. Joint-Sealant Schedule: Include the following information:

1. Joint-sealant application, joint location, and designation.

2. Joint-sealant manufacturer and product name.

3. Joint-sealant formulation.

4. Joint-sealant color.

D. Qualification Data: For qualified Installer

E. Product Certificates: For each kind of joint sealant and accessory, from manufacturer.

F. Sealant, Waterproofing, and Restoration Institute (SWRI) Validation Certificate: For each sealant specified to be validated by SWRI's Sealant Validation Program.

G. Product Test Reports: Based on evaluation of comprehensive tests performed by a qualified testing agency, indicating that sealants comply with requirements.

H. Warranties: Sample of special warranties.

1.05 QUALITY ASSURANCE:

A. Comply with the requirements specified in Section 01 43 00.

B. Installer Qualifications: Manufacturer's authorized representative who is trained and approved for installation of units required for this Project.

C. Source Limitations: Obtain each kind of joint sealant from single source from single manufacturer.

D. Preinstallation Conference: Conduct conference at Project site.

1.06 PROJECT CONDITIONS:

A. Do not proceed with installation of joint sealants under the following conditions:

1. When ambient and substrate temperature conditions are outside limits permitted by joint-sealant manufacturer.

2. When joint substrates are wet.

3. Where joint widths are less than those allowed by joint-sealant manufacturer for applications indicated.

4. Where contaminants capable of interfering with adhesion have not yet been removed from joint substrates.

1.07 WARRANTY:

A. Special Installer's Warranty: Manufacturer's standard form in which Installer agrees to repair or replace joint sealants that do not comply with performance and other requirements specified in this Section within specified warranty period.

1. Warranty Period: Five years from date of Substantial Completion.

B. Special Manufacturer's Warranty: Manufacturer's standard form in which joint-sealant manufacturer agrees to furnish joint sealants to repair or replace those that do not comply with performance and other requirements specified in this Section within specified warranty period.

1. Warranty Period: **5**years from date of Substantial Completion.

C. Special warranties specified in this article exclude deterioration or failure of joint sealants from the following:

1. Movement of the structure caused by structural settlement or errors attributable to design or construction resulting in stresses on the sealant exceeding sealant manufacturer's written specifications for sealant elongation and compression.

2. Disintegration of joint substrates from natural causes exceeding design specifications.

3. Mechanical damage caused by individuals, tools, or other outside agents.

4. Changes in sealant appearance caused by accumulation of dirt or other atmospheric contaminants.

PART 2 - PRODUCTS

2.01 MATERIALS, GENERAL:

A. Compatibility: Provide joint sealants, backings, and other related materials that are compatible with one another and with joint substrates under conditions of service and application, as demonstrated by joint-sealant manufacturer, based on testing and field experience.

B. Stain-Test-Response Characteristics: Where sealants are specified to be nonstaining to porous substrates, provide products that have undergone testing according to ASTM C1248 and have not stained porous joint substrates indicated for Project.

C. Colors of Exposed Joint Sealants: selected by Engineer from manufacturer's full range.

D. URETHANE JOINT SEALANTS:

A. High-performance, high-movement, low VOC, movement capability of +100/-50%, ASTM C920, Type S, Grade NS, Class 50, Use NT, T, M, A, O, I, Fed Spec TT-S-00230C, Class A, Type II.

1. Products:

a. Tremco Incorporated Dymonic 100 (Basis of Design) Sika Corporation, Construction Products Division.

b. BASF Building Systems

2.03 JOINT SEALANT BACKING:

A. General: Provide sealant backings of material that are nonstaining; are compatible with joint substrates, sealants, primers, and other joint fillers; and are approved for applications indicated by sealant manufacturer based on field experience and laboratory testing.

2.04 MISCELLANEOUS MATERIALS:

A. Primer: Material recommended by joint-sealant manufacturer where required for adhesion of sealant to joint substrates indicated, as determined from preconstruction joint-sealant-substrate tests and field tests.

B. Cleaners for Nonporous Surfaces: Chemical cleaners acceptable to manufacturers of sealants and sealant backing materials, free of oily residues or other substances capable of staining or harming joint substrates and adjacent nonporous surfaces in any way and formulated to promote optimum adhesion of sealants to joint substrates.

C. Masking Tape: Non staining, nonabsorbent material compatible with joint sealants and surfaces adjacent to joints.

PART 3 - EXECUTION

3.01 EXAMINATION:

A. Examine joints indicated to receive joint sealants, with Installer present, for compliance with requirements for joint configuration, installation tolerances, and other conditions affecting joint-sealant performance.

B. Proceed with installation only after unsatisfactory conditions have been corrected.

3.02 PREPARATION:

A. Surface Cleaning of Joints: Clean out joints immediately before installing joint sealants to comply with joint-sealant manufacturer's written instructions and the following requirements:

1. Remove all foreign material from joint substrates that could interfere with adhesion of joint sealant, including dust, paints (except for permanent, protective coatings tested and approved for sealant adhesion and compatibility by sealant manufacturer), old joint sealants, oil, grease, waterproofing, water repellents, water, surface dirt, and frost.

2. Clean porous joint substrate surfaces by brushing, grinding, mechanical abrading, or a combination of these methods to produce a clean, sound substrate capable of developing optimum bond with joint sealants. Remove loose particles remaining after cleaning operations above by vacuuming or blowing out joints with oil-free compressed air. Porous joint substrates include the following:

a. Concrete.

b. Masonry.

c. Exterior insulation and finish systems. Confirm compatibility with EFIS and sealant manufacturer.

3. Remove laitance and form-release agents from concrete.

4. Clean nonporous joint substrate surfaces with chemical cleaners or other means that do not stain, harm substrates, or leave residues capable of interfering with adhesion of joint sealants. Nonporous joint substrates include the following:

a. Metal.

b. Glass.

B. Joint Priming: Prime joint substrates where recommended by joint-sealant manufacturer or as indicated by preconstruction joint-sealant-substrate tests or prior experience. Apply primer to comply with joint-sealant manufacturer's written instructions. Confine primers to areas of joint-sealant bond; do not allow spillage or migration onto adjoining surfaces.

C. Masking Tape: Use masking tape where required to prevent contact of sealant or primer with adjoining surfaces that otherwise would be permanently stained or damaged by such contact or by cleaning methods required to remove sealant smears. Remove tape immediately after tooling without disturbing joint seal.

3.03 INSTALLATION OF JOINT SEALANTS:

A. General: Comply with joint-sealant manufacturer's written installation instructions for products and applications indicated, unless more stringent requirements apply.

B. Sealant Installation Standard: Comply with recommendations in ASTM C1193 for use of joint sealants as applicable to materials, applications, and conditions indicated.

C. Install sealant backings of kind indicated to support sealants during application and at position required to produce cross-sectional shapes and depths of installed sealants relative to joint widths that allow optimum sealant movement capability.

1. Do not leave gaps between ends of sealant backings.

2. Do not stretch, twist, puncture, or tear sealant backings.

3. Remove absorbent sealant backings that have become wet before sealant application and replace them with dry materials.

D. Install bond-breaker tape behind sealants where sealant backings are not used between sealants and backs of joints.

E. Install sealants using proven techniques that comply with the following and at the same time backings are installed:

1. Place sealants so they directly contact and fully wet joint substrates.

2. Completely fill recesses in each joint configuration.

3. Produce uniform, cross-sectional shapes and depths relative to joint widths that allow optimum sealant movement capability.

F. Tooling of Nonsag Sealants: Immediately after sealant application and before skinning or curing begins, tool sealants according to requirements specified in subparagraphs below to form smooth, uniform beads of configuration indicated; to eliminate air pockets; and to ensure contact and adhesion of sealant with sides of joint.

1. Remove excess sealant from surfaces adjacent to joints.

2. Use tooling agents that are approved in writing by sealant manufacturer and that do not discolor sealants or adjacent surfaces.

3. Provide concave joint profile per Figure 8A, flush joint profile where indicated per Figure 8B or recessed joint configuration of recess depth and at locations indicated per Figure 8C in ASTM C1193, as approved.

G. Clean off excess sealant or sealant smears adjacent to joints as the Work progresses by methods and with cleaning materials approved in writing by manufacturers of joint sealants and of products in which joints occur.

3.04 PROTECTION:

A. Protect joint sealants during and after curing period from contact with contaminating substances and from damage resulting from construction operations or other causes so sealants are without deterioration or damage at time of Substantial Completion. If, despite such protection, damage or deterioration occurs, cut out and remove damaged or deteriorated joint sealants immediately so installations with repaired areas are indistinguishable from original work.

3.05 CONTRACT CLOSEOUT:

A. Provide in accordance with Section 01 77 00.

3.06 JOINT-SEALANT SCHEDULE:

A. Joint-Sealant Application: Interior and exterior joints in vertical and horizontal nontraffic surfaces

1. Joint Locations:

a. Isolation and contraction joints in cast-in-place concrete slabs.

b. Control and expansion joints in unit masonry.

c. Joints in exterior insulation and finish systems.

d. Joints between metal panels.

e. Perimeter joints between materials listed above and frames of doors, windows and, louvers.

2. Urethane Joint Sealant: High performance, high movement, single component.

3. Joint-Sealant Color As selected by Engineer from manufacturer's full range of colors.

END OF SECTION

SECTION 08 11 00

METAL DOORS AND FRAMES

PART 1 - GENERAL

1.01 DESCRIPTION:

A. Provide doors, frames, vision panels and accessories as indicated and in compliance with Contract Documents.

1. Section Includes:

a. Standard hollow metal doors and frames.

1.02 REFERENCES:

A. ASTM International (ASTM):

1. A153/A153M: Standard Specification for Zinc Coating (Hot-Dip) on Iron and Steel Hardware.

2. A591/A591M: Standard Specification for Steel Sheet, Electrolytic Zinc-Coated, for Light Coating Weight (Mass) Applications.

3. A653/A653M: Standard Specification for Steel Sheet, Zinc-Coated (Galvanized) or Zinc-Iron Alloy-Coated (Galvannealed) by the Hot-Dip Process.

4. A1008/A1008M: Standard Specification for Steel, Sheet, Cold-Rolled, Carbon, Structural, High-Strength Low-Alloy, High-Strength Low-Alloy with Improved Formability, Solution Hardened, and Bake Hardenable

5. A1011/A1011M: Standard Specification for Steel, Sheet and Strip, Hot-Rolled, Carbon, Structural, High- Strength Low-Alloy, High-Strength Low-Alloy with Improved Formability, and Ultra-High Strength.

6. C476: Standard Specification for Grout for Masonry.

C. Door and Hardware Institute (DHI):

1. A115: Guide Specifications for Commercial Hollow Metal Doors & Frames

2. A115.1G: Installation Guide for Doors and Hardware

D. Hollow Metal Manufacturers Association (HMMA):

1. 840: Installation and Storage of Hollow Metal Doors and Frames.

2. 861: Guide Specifications for Commercial Hollow Metal Doors and Frames.

E. National Fire Protection Association (NFPA):

1. 80: Standard for Fire Doors and Other Opening Protectives

2. 105: Standard for Smoke Door Assemblies and Other Opening Protectives

3. 252: Standard Methods of Fire Tests of Door Assemblies

4. 257: Standard on Fire Test for Window and Glass Block Assemblies

F. Steel Door Institute (SDI):

1. 111e: Recommended Selection and Usage Guide for Standard Steel Doors, Frames and Accessories

2. 117: Manufacturing Tolerances Standard Steel Doors and Frames

3. : Test Procedure and Acceptance Criteria for Physical Endurance for Steel Doors and Hardware Reinforcing

4. A250.6: Hardware on Standard Steel Doors (Reinforcement & Application)

5. A250.8: Recommended Specifications for Standard Steel Doors and Frames

6. A250.10: Test Procedure and Acceptance Criteria for Prime Painted Steel Surfaces for Steel Doors and Frames

7. A250.11: Recommended Erection Instructions for Steel Frames.

G. Underwriters' Laboratories, Inc. (UL).

1. 9: Standard for Safety Fire Tests of Window Assemblies.

2. 10B: UL Standard for Safety Fire Tests of Door Assemblies - Tenth Edition; Reprint with Revisions through and Including April 13, 2009

3. 10C: Standard for Safety Positive Pressure Fire Tests of Door Assemblies.

4. 1784: Standard for Safety Air Leakage Tests of Door Assemblies.

1.03 DEFINITIONS:

A. Minimum Thickness: Minimum thickness of base metal without coatings.

B. Standard Hollow Metal Work: Hollow metal work fabricated according to ANSI/SDI A250.8.

1.05 SUBMITTALS:

A. Submit the following shop drawings in accordance with Section 01 33 00.

B. Product Data: For each type of product indicated. Include construction details, material descriptions, core descriptions, fire-resistance rating, and finishes.

1. Elevations of each door design.

2. Details of doors, including vertical and horizontal edge details and metal thicknesses.

3. Frame details for each frame type, including dimensioned profiles and metal thicknesses.

4. Locations of reinforcement and preparations for hardware.

5. Details of each different wall opening condition.

6. Details of anchorages, joints, field splices, and connections.

7. Details of accessories.

8. Details of moldings, removable stops, and glazing.

C. Other Action Submittals:

1. Schedule: Provide a schedule of hollow metal work prepared by or under the supervision of supplier, using same reference numbers for details and openings as those on Drawings. Coordinate with door hardware schedule.

E. Product Test Reports: Based on evaluation of comprehensive tests performed by a qualified testing agency, for each type of hollow metal door and frame assembly.

1.06 QUALITY ASSURANCE:

A. Source Limitations: Obtain hollow metal work from single source from single manufacturer.

B. Fire-Rated Door Assemblies: Assemblies complying with NFPA 80 that are listed and labeled by a qualified testing agency, for fire-protection ratings indicated, based on testing according to NFPA 252 or UL 10B.

1.07 DELIVERY STORAGE AND HANDLING:

A. Before delivery, identify type and size of each door with markings that will not damage finish.

B. Store all doors and frames in a weathertight enclosure and do not expose to the elements.

C. Deliver hollow metal work palletized, wrapped, or crated to provide protection during transit and Project-site storage. Do not use nonvented plastic.

1. Provide additional protection to prevent damage to finish of factory-finished units.

D. Deliver welded frames with two removable spreader bars across bottom of frames, tack welded to jambs and mullions.

E. Store hollow metal work under cover at Project site. Place in stacks of five units maximum in a vertical position with heads up, spaced by blocking, on minimum 4-inch- (100-mm-) high wood blocking. Do not store in a manner that traps excess humidity.

1. Provide minimum 1/4-inch (6-mm) space between each stacked door to permit air circulation.

1.08 PROJECT CONDITIONS

A. Field Measurements: Verify actual dimensions of openings by field measurements before fabrication.

1.09 COORDINATION

A. Coordinate installation of anchorages for hollow metal frames. Furnish setting drawings, templates, and directions for installing anchorages, including sleeves, concrete inserts, anchor bolts, and items with integral anchors. Deliver such items to Project site in time for installation.

PART 2 - PRODUCTS

2.01 PREPARATION:

A. Verify details; obtain copy of accepted hardware schedule templates and other information.

B. Verify size, design and fire-resistive rating of each opening.

C. Coordinate details of construction with other work supporting or adjoining frames and doors.

2.02 MANUFACTURERS:

A. Manufacturers:

1. Amweld Building Products, LLC.

2. Ceco Door Products; an Assa Abloy Group company.

3. Curries Company; an Assa Abloy Group company.

4. Deansteel Manufacturing Company, Inc.

5. Pioneer Industries, Inc.

6. Steelcraft; an Ingersoll-Rand company.

2.03 MATERIALS:

A. Cold-Rolled Steel Sheet: ASTM A1008/A1008M, Commercial Steel (CS), Type B; suitable for exposed applications.

B. Metallic-Coated Steel Sheet: ASTM A653/A653M, Commercial Steel (CS), Type B; with minimum G60 (Z180) metallic coating.

D. Frame Anchors: ASTM A591/A591M, Commercial Steel (CS), 40Z (12G) coating designation; mill phosphatized.

1. For anchors built into exterior walls, steel sheet complying with ASTM A1008/A1008M or ASTM A1011/A1011M, hot-dip galvanized according to ASTM A153/A153M, Class B.

F. Inserts, Bolts, and Fasteners: Hot-dip galvanized according to ASTM A153/A153M.

G. Grout: ASTM C476, except with a maximum slump of 4 inches (102 mm), as measured according to ASTM C143/C143M.

H. Glazing: Comply with requirements in Division 08 Section "Glazing."

2.04 STANDARD HOLLOW METAL DOORS:

A. General: Provide doors of design indicated, not less than thickness indicated; fabricated with smooth surfaces, without visible joints or seams on exposed faces unless otherwise indicated. Comply with ANSI/SDI A250.8.

1. Design: Flush panel.

2. Core Construction: Manufacturer's standard kraft-paper honeycomb, polystyrene, polyurethane, polyisocyanurate, mineral-board, or vertical steel-stiffener core.

a. Fire Door Core: As required to provide fire-protection and temperature-rise ratings indicated.

b. Thermal-Rated (Insulated) Doors: Where indicated, provide doors fabricated with thermal-resistance value (R-value) of not less than R-2.5 (operable) when tested according to ASTM C1363.

(1) Locations: Exterior doors and interior doors where indicated.

3. Vertical Edges for Single-Acting Doors: Manufacturer's standard.

   a. Beveled Edge: 1/8 inch in 2 inches (3 mm in 50 mm).

4. Vertical Edges for Double-Acting Doors: Round vertical edges with 2-1/8-inch (54-mm) radius.

5. Top and Bottom Edges: Closed with flush or inverted 0.042-inch- (1.0-mm-) thick, end closures or channels of same material as face sheets.

6. Tolerances: Comply with SDI 117, "Manufacturing Tolerances for Standard Steel Doors and Frames."

B. Exterior Doors: Face sheets fabricated from metallic-coated steel sheet. Provide doors complying with requirements indicated below by referencing ANSI/SDI A250.8 for level and model and ANSI/SDI A250.4 for physical performance level:

1. Level 3 and Physical Performance Level A (Extra Heavy Duty), Model 2 (Seamless).

C. Interior Doors: Face sheets fabricated from cold-rolled steel sheet unless metallic-coated sheet is indicated. Provide doors complying with requirements indicated below by referencing ANSI/SDI A250.8 for level and model and ANSI/SDI A250.4 for physical performance level:

1. Level 2 and Physical Performance Level B (Heavy Duty), Model 2 (Seamless).

D. Hardware Reinforcement: Fabricate according to ANSI/SDI A250.6 with reinforcing plates from same material as door face sheets.

E. Fabricate concealed stiffeners and hardware reinforcement from either cold- or hot-rolled steel sheet.

2.05 STANDARD HOLLOW METAL FRAMES:

A. General: Comply with ANSI/SDI A250.8 and with details indicated for type and profile.

B. Exterior Frames: Fabricated from metallic-coated steel sheet.

1. Fabricate frames with mitered or coped corners.

2. Fabricate frames full profile welded per conditions.

3. Frames for Level 3 Steel Doors: 0.053-inch- (1.3-mm-) thick steel sheet.

C. Interior Frames: Fabricated from cold-rolled steel

1. Fabricate frames with mitered or coped corners.

2. Fabricate frames in drywall walls as knocked down and in masonry walls as full profile welded.

3. Frames for Level 2 Steel Doors: 0.053-inch- (1.3-mm-) thick steel sheet.

D. Hardware Reinforcement: Fabricate according to ANSI/SDI A250.6 with reinforcement plates from same material as frames.

2.06 FRAME ANCHORS:

A. Jamb Anchors:

1. Masonry Type: Adjustable strap-and-stirrup or T-shaped anchors to suit frame size, not less than 0.042 inch (1.0 mm) thick, with corrugated or perforated straps not less than 2 inches (50 mm) wide by 10 inches (250 mm) long; or wire anchors not less than 0.177 inch (4.5 mm) thick.

2. Stud-Wall Type: Designed to engage stud, welded to back of frames; not less than 0.042 inch (1.0 mm) thick.

3. Compression Type for Drywall Slip-on Frames: Adjustable compression anchors.

4. Postinstalled Expansion Type for Masonry: Minimum 3/8-inch- (9.5-mm-) diameter bolts with expansion shields or inserts. Provide pipe spacer from frame to wall, with throat reinforcement plate, welded to frame at each anchor location.

B. Floor Anchors: Formed from same material as frames, not less than 0.042 inch (1.0 mm) thick, and as follows:

1. .

2.07 STOPS AND MOLDINGS:

A. Moldings for Glazed Lites in Doors: Minimum 0.032 inch (0.8 mm) thick, fabricated from same material as door face sheet in which they are installed.

2.08 GLASS LITES

A. Exterior Doors: Uncoated clear 1-inch insulating glass units consisting of two layers ¼ inch clear float glass, kind FT (fully tempered).

B. Interior Doors: Uncoated clear single pane ¼ inch clear float glass, kind FT (fully tempered).

2.09 ACCESSORIES:

A. Grout Guards: Formed from same material as frames, not less than 0.016 inch (0.4 mm) thick.

2.10 FABRICATION:

A. Fabricate hollow metal work to be rigid and free of defects, warp, or buckle. Accurately form metal to required sizes and profiles, with minimum radius for thickness of metal. Where practical, fit and assemble units in manufacturer's plant. To ensure proper assembly at Project site, clearly identify work that cannot be permanently factory assembled before shipment.

B. Tolerances: Fabricate hollow metal work to tolerances indicated in SDI 117

C. Hollow Metal Doors:

1. Exterior Doors: Provide weep-hole openings in bottom of exterior doors to permit moisture to escape. Seal joints in top edges of doors against water penetration.

2. Glazed Lites: Factory cut openings in doors.

D. Hollow Metal Frames: Where frames are fabricated in sections due to shipping or handling limitations, provide alignment plates or angles at each joint, fabricated of same thickness metal as frames.

1. Welded Frames: Weld flush face joints continuously; grind, fill, dress, and make smooth, flush, and invisible.

2. Provide countersunk, flat- or oval-head exposed screws and bolts for exposed fasteners unless otherwise indicated.

3. Grout Guards: Weld guards to frame at back of hardware mortises in frames to be grouted.

4. Floor Anchors: Weld anchors to bottom of jambs and mullions with at least four spot welds per anchor.

5. Jamb Anchors: Provide number and spacing of anchors as follows:

a. Masonry Type: Locate anchors not more than 18 inches (450 mm) from top and bottom of frame. Space anchors not more than 32 inches (800 mm) o.c. and as follows:

(1) Minimum three anchors per jamb from 60 to 90 inches (1500 to 2250 mm) high. Provide minimum four anchors (or more if recommended by SDI for size and use).

b. Stud-Wall Type: Locate anchors not more than 18 inches (457 mm) from top and bottom of frame. Space anchors not more than 32 inches (813 mm) o.c. and as follows:

(1) Three anchors per jamb up to 60 inches (1524 mm) high.

(2) Two anchors per head for frames above 42 inches (1050 mm) wide and mounted in metal-stud partitions.

c. Compression Type: Not less than two anchors in each jamb.

d. Postinstalled Expansion Type: Locate anchors not more than 6 inches (150 mm) from top and bottom of frame. Space anchors not more than 26 inches (650 mm) o.c.

6. Door Silencers: Except on weather-stripped doors, drill stops to receive door silencers as follows. Keep holes clear during construction.

a. Single-Door Frames: Drill stop in strike jamb to receive three door silencers.

E. Fabricate concealed stiffeners, edge channels, and hardware reinforcement from either cold- or hot-rolled steel sheet.

F. Hardware Preparation: Factory prepare hollow metal work to receive templated mortised hardware; include cutouts, reinforcement, mortising, drilling, and tapping according to the Door Hardware Schedule and templates furnished as specified in Division 08 Section "Door Hardware."

1. Locate hardware as indicated, or if not indicated, according to ANSI/SDI A250.8

2. Reinforce doors and frames to receive non templated, mortised and surface-mounted door hardware.

3. Comply with applicable requirements in ANSI/SDI A250.6 and ANSI/DHI A115 Series specifications for preparation of hollow metal work for hardware.

G. Stops and Moldings: Provide stops and moldings around glazed lites where indicated. Form corners of stops and moldings with butted or mitered hairline joints.

1. Single Glazed Lites: Provide fixed stops and moldings welded on secure side of hollow metal work.

2. Multiple Glazed Lites: Provide fixed and removable stops and moldings so that each glazed lite are capable of being removed independently.

3. Provide fixed frame moldings on outside of exterior and on secure side of interior doors and frames.

4. Provide loose stops and moldings on inside of hollow metal work.

5. Coordinate rabbet width between fixed and removable stops with type of glazing and type of installation indicated.

2.11 STEEL FINISHES:

A. Prime Finish: Apply manufacturer's standard primer immediately after cleaning and pretreating.

1. Shop Primer: Manufacturer's standard, fast-curing, lead- and chromate-free primer complying with ANSI/SDI A250.10 acceptance criteria; recommended by primer manufacturer for substrate; compatible with substrate and field-applied coatings despite prolonged exposure.

PART 3 - EXECUTION

3.01 EXAMINATION:

A. Examine substrates, areas, and conditions, with Installer present, for compliance with requirements for installation tolerances and other conditions affecting performance of the Work.

B. Examine roughing-in for embedded and built-in anchors to verify actual locations before frame installation.

C. For the record, prepare written report, endorsed by Installer, listing conditions detrimental to performance of the Work.

D. Proceed with installation only after unsatisfactory conditions have been corrected.

3.02 PREPARATION:

A. Remove welded-in shipping spreaders installed at factory. Restore exposed finish by grinding, filling, and dressing, as required to make repaired area smooth, flush, and invisible on exposed faces.

B. Prior to installation, adjust and securely brace welded hollow metal frames for squareness, alignment, twist, and plumbness to the following tolerances:

1. Squareness: +/- 1/16 inch (1.6 mm), measured at door rabbet on a line 90 degrees from jamb perpendicular to frame head.

2. Alignment: +/- 1/16 inch (1.6 mm), measured at jambs on a horizontal line parallel to plane of wall.

3. Twist: +/- 1/16 inch (1.6 mm), measured at opposite face corners of jambs on parallel lines, and perpendicular to plane of wall.

4. Plumbness: +/- 1/16 inch (1.6 mm), measured at jambs on a perpendicular line from head to floor.

C. Drill and tap doors and frames to receive nontemplated, mortised, and surface-mounted door hardware.

3.03 INSTALLATION:

A. General: Install hollow metal work plumb, rigid, properly aligned, and securely fastened in place; comply with Drawings and manufacturer's written instructions.

B. Hollow Metal Frames: Install hollow metal frames of size and profile indicated. Comply with ANSI/SDI A250.11.

1. Set frames accurately in position, plumbed, aligned, and braced securely until permanent anchors are set. After wall construction is complete, remove temporary braces, leaving surfaces smooth and undamaged.

a. At fire-protection-rated openings, install frames according to NFPA 80.

b. Where frames are fabricated in sections because of shipping or handling limitations, field splice at accepted locations by welding face joint continuously; grind, fill, dress, and make splice smooth, flush, and invisible on exposed faces.

c. Install frames with removable glazing stops located on secure side of opening.

d. Install door silencers in frames before grouting.

e. Remove temporary braces necessary for installation only after frames have been properly set and secured.

f. Check plumbness, squareness, and twist of frames as walls are constructed. Shim as necessary to comply with installation tolerances.

g. Field apply bituminous coating to backs of frames that are filled with grout containing antifreezing agents.

2. Floor Anchors: Provide floor anchors for each jamb and mullion that extends to floor, and secure with postinstalled expansion anchors.

a. Floor anchors may be set with powder-actuated fasteners instead of postinstalled expansion anchors if so indicated and accepted on Shop Drawings.

3. Metal-Stud Partitions: Solidly pack mineral-fiber insulation behind frames.

4. Masonry Walls: Coordinate installation of frames to allow for solidly filling space between frames and masonry with grout.

5. In-Place Masonry Construction: Secure frames in place with post installed expansion anchors. Countersink anchors, and fill and make smooth, flush, and invisible on exposed faces.

6. In-Place Gypsum Board Partitions: Secure frames in place with post installed expansion anchors through floor anchors at each jamb. Countersink anchors, and fill and make smooth, flush, and invisible on exposed faces.

7. Installation Tolerances: Adjust hollow metal door frames for squareness, alignment, twist, and plumb to the following tolerances:

   a. Squareness: +/- 1/16 inch (1.6 mm), measured at door rabbet on a line 90 degrees from jamb perpendicular to frame head.

   b. Alignment: +/- 1/16 inch (1.6 mm), measured at jambs on a horizontal line parallel to plane of wall.

   c. Twist: +/- 1/16 inch (1.6 mm), measured at opposite face corners of jambs on parallel lines, and perpendicular to plane of wall.

   d. Plumbness: +/- 1/16 inch (1.6 mm), measured at jambs at floor.

C. Hollow Metal Doors: Fit hollow metal doors accurately in frames, within clearances specified below. Shim as necessary.

1. Non-Fire-Rated Standard Steel Doors:

   a. Jambs and Head: 1/8 inch (3 mm) +/- 1/16 inch (1.6 mm).

   b. Between Edges of Pairs of Doors: 1/8 inch (3 mm) +/- 1/16 inch (1.6 mm).

   c. Between Bottom of Door and Top of Threshold: Maximum 3/8 inch (10 mm).

   d. Between Bottom of Door and Top of Finish Floor (No Threshold): Maximum 3/4 inch (19 mm).

2. Fire-Rated Doors: Install doors with clearances according to NFPA 80.

D. Glazing: Comply with installation requirements in Division 08 Section "Glazing" and with hollow metal manufacturer's written instructions.

1. Secure stops with countersunk flat- or oval-head machine screws spaced uniformly not more than 9 inches (225 mm) o.c. and not more than 2 inches (50 mm) o.c. from each corner.

3.04 ADJUSTING AND CLEANING:

A. Final Adjustments: Check and readjust operating hardware items immediately before final inspection. Leave work in complete and proper operating condition. Remove and replace

defective work, including hollow metal work that is warped, bowed, or otherwise unacceptable.

B. Remove grout and other bonding material from hollow metal work immediately after installation.

C. Prime-Coat Touchup: Immediately after erection, sand smooth rusted or damaged areas of prime coat and apply touchup of compatible air-drying, rust-inhibitive primer.

D. Metallic-Coated Surfaces: Clean abraded areas and repair with galvanizing repair paint according to manufacturer's written instructions.

3.05 PROTECTION:

A. After erection, protect doors, frames, vision panels and finishing hardware from damage due to installation of other work or from lime, acid, cement, or other harmful compounds.

B. After erection, protect doors, frames and finishing hardware from damage due to installation of other work or from lime, acid, cement, or other harmful compounds.

C. Replace damaged doors, frames and finishing hardware as determined by the Engineer with new items and at no additional expense to the Owner.

3.06 CONTRACT CLOSEOUT:

A. Provide in accordance with Section 01 77 00.

END OF SECTION

SECTION 08 33 23

OVERHEAD COILING DOORS

PART 1 - GENERAL

1.01 DESCRIPTION:

A. Provide overhead coiling doors as indicated and in compliance with Contract Documents.

B. Section Includes:

1. Insulated manual service doors

1.02 REFERENCES:

A. American Architectural Manufacturer's Association (AAMA):

1. 611: Voluntary Specification for Anodized Architectural Aluminum

2. 2603: Voluntary Specification, Performance Requirements and Test Procedures for Pigmented Organic Coatings on Aluminum Extrusions and Panels

B. American National Standards Institute (ANSI):

1. A 117.1: Accessible and Usable Buildings and Facilities.

2. DASMA 105: Test Method for Thermal Transmittance and Air Infiltration of Garage Doors

3. DASMA 107: Room Fire Test Standard for Garage Doors Using Foam Plastic Insulation

4. DASMA 108: Standard Method for Testing Sectional Garage Doors and Rolling Doors: Determination of Structural Performance Under Uniform Static Air Pressure Difference

5. DASMA 115: Standard Method for Testing Sectional Garage Doors and Rolling Doors: Determination of Structural Performance Under Missile Impact and Cyclic Wind Pressure

C. American Society of Civil Engineers (ASCE):

1. 7: Minimum Design Loads for Buildings and Other Structures - Includes Supplement No. 1

D. ASTM International (ASTM):

1. A653/A653M: Standard Specification for Steel Sheet, Zinc-Coated (Galvanized) or Zinc-Iron Alloy-Coated (Galvannealed) by the Hot-Dip Process.

2. A666: Standard Specification for Annealed or Cold-Worked Austenitic Stainless Steel Sheet, Strip, Plate, and Flat Bar.

3. B221/B221M: Standard Specification for Aluminum and Aluminum-Alloy Extruded Bars, Rods, Wire, Profiles, and Tubes

4. E84: Standard Test Method for Surface Burning Characteristics of Building Materials

5. E90: Standard Test Method for Laboratory Measurement of Airborne Sound Transmission Loss of Building Partitions and Elements

6. E283: Standard Test Method for Determining Rate of Air Leakage Through Exterior Windows, Curtain Walls, and Doors Under Specified Pressure Differences Across the Specimen

7. E330: Standard Test Method for Structural Performance of Exterior Windows, Doors, Skylights and Curtain Walls by Uniform Static Air Pressure Difference

8. E413: Classification for Rating Sound Insulation

9. E1886: Standard Test Method for Performance of Exterior Windows, Curtain Walls, Doors, and Impact Protective Systems Impacted by Missile(s) and Exposed to Cyclic Pressure Differentials

10. E1996: Standard Specification for Performance of Exterior Windows, Curtain Walls, Doors, and Impact Protective Systems Impacted by Windborne Debris in Hurricanes

E. National Electrical Manufacturers Association (NEMA):

1. ICS 1: Industrial Control and Systems General Requirements

2. ICS 2: Industrial Control and Systems Controllers, Contactors, and Overload Relays Rated 600 Volts

3. ICS 6: Industrial Control and Systems Enclosures

F. National Fire Protection Association (NFPA):

1. 70: National Electrical Code

2. 80: Standard for Fire Doors and Other Opening Protectives

3. 105: Standard for Smoke Door Assemblies and Other Opening Protectives

4. 252: Standard Methods of Fire Tests of Door Assemblies

G. Underwriters' Laboratories, Inc. (UL).

1. 10B: Safety Fire Tests of Door Assemblies

2. 325: Safety Door, Drapery, Gate, Louver, and Window Operators and Systems

3. 723: Safety Test for Surface Burning Characteristics of Building Materials

4. 1784: Safety Air Leakage Tests of Door Assemblies.

1.03 PERFORMANCE REQUIREMENTS

A. Structural Performance, Exterior Doors: Capable of withstanding the design wind loads.

1. Design Wind Load: As indicated on Drawings

2. Testing: According to ASTM E330

3. Deflection Limits: Design overhead coiling doors to withstand design wind load without evidencing permanent deformation or disengagement of door components.

4. Operability under Wind Load: Design overhead coiling doors to remain operable under design wind load, acting inward and outward.

5. Seismic Performance: Overhead coiling doors shall withstand the effects of earthquake motions determined according to SEI/ASCE 7 Seismic Component Importance Factor: As per the code.

B. Operation Cycles: Provide overhead coiling door components and operators capable of operating for not less than number of cycles indicated for each door. One operation cycle is complete when a door is opened from the closed position to the fully open position and returned to the closed position.

1.04 SUBMITTALS:

A. Submit the following shop drawings in accordance with Section 01 33 00.

B. Product Data: For each type and size of overhead coiling door and accessory. Include the following:

1. Include construction details, material descriptions, dimensions of individual components, profiles for slats, and finishes.

2. Include rated capacities, operating characteristics, electrical characteristics, and furnished accessories.

C. Shop Drawings: For each installation and for special components not dimensioned or detailed in manufacturer's product data.

1. Include plans, elevations, sections, and mounting details.

2. Include details of equipment assemblies, and indicate dimensions, required clearances, method of field assembly, components, and location and size of each field connection.

3. Include points of attachment and their corresponding static and dynamic loads imposed on structure.

4. For exterior components, include details of provisions for assembly expansion and contraction and for excluding and draining moisture to the exterior.

5. Show locations of accessories.

D. Qualification Data: For qualified Installer.

E. Seismic Qualification Certificates: For overhead coiling doors**,** accessories, and components, from manufacturer.

F. Maintenance Data: For overhead coiling doors to include in maintenance manuals.

1.05 QUALITY ASSURANCE:

A. Installer Qualifications: An entity that employs installers and supervisors who are trained and approved by manufacturer for both installation and maintenance of units required for this Project.

1. Maintenance Proximity: Not more than two hours' normal travel time from Installer's place of business to Project site.

B. Source Limitations: Obtain overhead coiling doors from single source from single manufacturer.

1.06 DELIVERY STORAGE AND HANDLING:

A. Deliver all units from the factory to the site crated, braced and protected against distortion and damage during transit and unloading. Label all parts to comply with shop drawings for designations.

B. Store in clean and dry locations, properly supported above floor to allow free movement of air and to prevent bending or warping. Units showing effects of rough handling will be rejected.

C. Follow manufacturer's instructions.

1.07 WARRANTY:

A. Standard Warranty: Two years from date of shipment against defects in material and workmanship.

PART 2 - PRODUCTS

2.01 DOOR ASSEMBLY:

A. Insulated Service Door: Overhead coiling door formed with curtain of interlocking metal slats.

1. Manufacturers:

a. Cookson Company

b. Cornell Iron Works, Inc.

c. ACME Rolling Doors.

d. Alpine Overhead Doors, Inc. C.H.I. Overhead Doors.

e. Clopay Building Products.

f. Raynor

g. Wayne-Dalton Corp.

B. Operation Cycles: Not less than 50,000. One operation cycle is complete when a door is opened from the closed position to the fully open position and returned to the closed position.

1. Include tamperproof cycle counter.

C. Air Infiltration: Maximum rate of 0.08 cfm/sq. ft. (0.406 L/s per sq. m) at 15 and 25 mph (24.1 and 40.2 km/h) when tested according to ASTM E283.

D. Curtain R-Value: 6.0 degrees F x h x sq. ft./Btu (1.057 K x sq. m/W).

E. Door Curtain Material: Galvanized steel.Door Curtain Slats: Flat profile slats of 1-7/8-inch (48-mm)center-to-center height.

1. Fenestrated Slats: Approximately [3- by 5/8-inch (76- by 16-mm) openings spaced approximately 1-1/2 inches (38 mm) apart and beginning 12 inches (305 mm) from jamb guides.

2. Insulated-Slat Interior Facing: Metal.

3. (NTS: Feature in "Gasket Seal" Subparagraph below is available from some manufacturers and can improve overall performance but may be less durable than entirely metal-on-metal slats. Verify availability with manufacturer.)Gasket Seal. Manufacturer's standard continuous gaskets between slats.

F. Bottom Bar: Two angles, each not less than 1-1/2 by 1-1/2 by 1/8 inch (38 by 38 by 3 mm) thick; fabricated from hot-dip galvanized steeland finished to match door.

G. Curtain Jamb Guides: Galvanized steel with exposed finish matching curtain slats.

1. Shape: Round.

2. Mounting: Outside face of wall.

H. Locking Devices: Equip door with locking device assembly.

1. Locking Device Assembly:Cremone type, both jamb sides locking bars, operable from inside and outside with cylinders.

I. Manual Door Operator: Chain-hoist operator

1. Provide operator with through-wall shaft operation.

2. Provide operator with manufacturer's standard removable operating arm.

J. Curtain Accessories: Equip door with weather seals

K. Door Finish:

1. Interior Curtain-Slat Facing: Match finish of exterior curtain-slat face.

2.02 DOOR CURTAIN MATERIALS AND CONSTRUCTION:

A. Door Curtains: Fabricate overhead coiling-door curtain of interlocking metal slats, designed to withstand wind loading indicated, in a continuous length for width of door without splices. Unless otherwise indicated, provide slats of thickness and mechanical properties recommended by door manufacturer for performance, size, and type of door indicated, and as follows:

1. Steel Door Curtain Slats: Zinc-coated (galvanized), cold-rolled structural steel sheet; complying with ASTM A653/A653M, with G90 (Z275) zinc coating; nominal sheet thickness (coated) of 0.028 inch (0.71 mm); and as required.

2. Vision-Panel Glazing: Manufacturer's standard clear glazing, fabricated from transparent acrylic sheet or fire-protection rated glass as required for type of door; set in glazing channel secured to curtain slats.

3. Insulation: Fill slats for insulated doors with manufacturer's standard thermal insulation complying with maximum flame-spread and smoke-developed indexes

of 75 and 450, respectively, according to ASTM E84 or UL 723. Enclose insulation completely within slat faces.

4. Metal Interior Curtain-Slat Facing: Match metal of exterior curtain-slat face, with minimum steel thickness of 0.010 inch (0.25 mm).

B. Curtain Jamb Guides: Manufacturer's standard angles or channels and angles of same material and finish as curtain slats unless otherwise indicated, with sufficient depth and strength to retain curtain, to allow curtain to operate smoothly, and to withstand loading. Slot bolt holes for guide adjustment. Provide removable stops on guides to prevent overtravel of curtain**,** and a continuous bar for holding windlocks.

2.03 HOODS:

A. General: Form sheet metal hood to entirely enclose coiled curtain and operating mechanism at opening head. Contour to fit end brackets to which hood is attached. Roll and reinforce top and bottom edges for stiffness. Form closed ends for surface-mounted hoods and fascia for any portion of between-jamb mounting that projects beyond wall face. Equip hood with intermediate support brackets as required to prevent sagging.

1. Galvanized Steel: Nominal 0.028-inch (0.71 mm) thick, hot-dip galvanized steel sheet with G90 (Z275) zinc coating, complying with ASTM A653/A653M.

2. Exterior-Mounted Doors: Fabricate hood to act as weather protection and with a perimeter sealant-joint-bead profile for applying joint sealant.

2.04 LOCKING DEVICES:

A. Slide Bolt: Fabricate with side-locking bolts to engage through slots in tracks for locking by padlock, located on both left and right jamb sides, operable from coil side.

B. Locking Device Assembly: Fabricate with cylinder lock, spring-loaded dead bolt, operating handle, cam plate, and adjustable locking bars to engage through slots in tracks.

1. Lock Cylinders: Cylinders standard with manufacturerand keyed to building keying system.

2. Keys: Three for each cylinder.

2.05 CURTAIN ACCESSORIES:

A. Weatherseals for Exterior Doors: Equip each exterior door with weather-stripping gaskets fitted to entire exterior perimeter of door for a weather-resistant installation unless otherwise indicated.

1. At door head, use 1/8-inch (3 mm) thick, replaceable, continuous-sheet baffle secured to inside of hood or field- installed on the header.

2. At door jambs, use replaceable, adjustable, continuous, flexible, 1/8-inch (3 mm) thick seals of flexible vinyl, rubber, or neoprene.

B. Push/Pull Handles: Equip each push-up-operated or emergency-operated door with lifting handles on each side of door, finished to match door.

C. Pull-Down Strap: Provide pull-down straps for doors more than 84 inches (2130 mm) high.

2.06 COUNTERBALANCING MECHANISM:

A. General: Counterbalance doors by means of manufacturer's standard mechanism with an adjustable-tension, steel helical torsion spring mounted around a steel shaft and contained in a spring barrel connected to top of curtain with barrel rings. Use grease-sealed bearings or self-lubricating graphite bearings for rotating members

B. Counterbalance Barrel: Fabricate spring barrel of manufacturer's standard hot-formed, structural-quality, eamless or welded carbon-steel pipe, of sufficient diameter and wall thickness to support rolled-up curtain without distortion of slats and to limit barrel deflection to not more than 0.03 in./ft. (2.5 mm/m) of span under full load.

C. Counterbalance Spring: One or more oil-tempered, heat-treated steel helical torsion springs. Size springs to counterbalance weight of curtain, with uniform adjustment accessible from outside barrel. Secure ends of springs to barrel and shaft with cast-steel barrel plugs.

D. Torsion Rod for Counterbalance Shaft: Fabricate of manufacturer's standard cold-rolled steel, sized to hold fixed spring ends and carry torsional load.

E. Brackets: Manufacturer's standard mounting brackets of either cast iron or cold-rolled steel plate.

2.07 MANUAL DOOR OPERATORS:

A. General: Equip door with manual door operator by door manufacturer.

B. Chain-Hoist Operator: Consisting of endless steel hand chain, chain-pocket wheel and guard, and gear-reduction unit with a maximum 25-lbf (111-N) force for door operation. Provide alloy-steel hand chain with chain holder secured to operator guide.

C. Crank Operator: Consisting of crank and crank gearbox, steel crank drive shaft, and gear-reduction unit, of type indicated. Size gears to require not more than 25-lbf (111-N) force to turn crank. Fabricate gearbox to be oil tight and to completely enclose operating mechanism. Provide manufacturer's standard crank-locking device.

2.08 GENERAL FINISH REQUIREMENTS:

A. Comply with NAAMM's "Metal Finishes Manual for Architectural and Metal Products" for recommendations for applying and designating finishes.

B. Appearance of Finished Work: Noticeable variations in same piece are not acceptable. Variations in appearance of adjoining components are acceptable if they are within the range of accepted Samples and are assembled or installed to minimize contrast.

2.09 STEEL AND GALVANIZED-STEEL FINISHES:

A. Baked-Enamel or Powder-Coat Finish: Manufacturer's standard baked-on finish consisting of prime coat and thermosetting topcoat. Comply with coating manufacturer's written instructions for cleaning, pretreatment, application, and minimum dry film thickness.

PART 3 - EXECUTION

3.01 EXAMINATION:

A. Examine substrates areas and conditions, with Installer present, for compliance with requirements for substrate construction and other conditions affecting performance of the Work.

B. Proceed with installation only after unsatisfactory conditions have been corrected.

3.02 INSTALLATION:

A. Install overhead coiling doors and operating equipment complete with necessary hardware, anchors, inserts, hangers, and equipment supports; according to manufacturer's written instructions and as specified.

B. Install overhead coiling doors and hoodsat the mounting ocations indicated for each door.

3.03 STARTUP SERVICE:

A. Engage a factory-authorized service representative to perform startup service.

1. Perform installation and startup checks according to manufacturer's written instructions.

3.04 ADJUSTING:

A. Adjust hardware and moving parts to function smoothly so that doors operate easily, free of warp, twist, or distortion.

B. Lubricate bearings and sliding parts as recommended by manufacturer.

C. Adjust seals to provide weathertight fit around entire perimeter.

3.05 MAINTENANCE SERVICE:

A. Initial Maintenance Service: Beginning at Substantial Completion, maintenance service shall include 12 months' full maintenance by skilled employees of coiling-door Installer. Include quarterly preventive maintenance, repair or replacement of worn or defective components, lubrication, cleaning, and adjusting as required for door operation. Parts and supplies shall be manufacturer's authorized replacement parts and supplies.

1. Perform maintenance, including emergency callback service, during normal working hours.

2. Include 24-hour-per-day, seven-day-per-week, emergency callback service.

3.06 DEMONSTRATION:

A. Engage a factory-authorized service representative to train Owner's maintenance personnel to adjust, operate, and maintain overhead coiling doors.

3.07 CONTRACT CLOSEOUT:

A. Provide in accordance with Section 01 77 00.

END OF SECTION

SECTION 08 51 13

ALUMINUM WINDOWS

PART 1 - GENERAL

1.01 DESCRIPTION:

A. Provide aluminum windows as indicated and in compliance with Contract Documents.

1. Section Includes:

a. Extruded aluminum windows with fixed sash.

b. Glass factory glazed

c. Security devices on windows.

B. (NTS: Select the appropriate references in the list below to be included in the project. Add Aluminum Association (AA):

1. C12C40R1x: Chemical Finish

2. C12C42R1x: Chemical Finish

3. M12C22A31: Mechanical Finish

4. M12C22A32/A34: Mechanical Finish

5. M12C22A41: Anodized Plus Finish

6. M12C22A42/A44: Mechanical Finish

C. American Architectural Manufacturers Association (AAMA):

1. 101: Standard/Specification for Windows, Doors and Unit Skylights

2. 611: Voluntary Specification for Anodized Architectural Aluminum

3. 907: Voluntary Specification for Corrosion Resistant Coatings on Carbon Steel Components

4. 1503: Voluntary Test Method for Thermal Transmittance and Condensation Resistance of Windows, Doors and Glazed Wall Sections

D. American Society of Civil Engineers (ASCE):

1. 7: Minimum Design Loads for Buildings and Other Structures - Includes Supplement No. 1

E. ASTM International (ASTM):

1. C1036: Standard Specification for Flat Glass.

2. E90: Standard Test Method for Laboratory Measurement of Airborne Sound Transmission Loss of Building Partitions and Elements.

3. E1332: Standard Classification for Determination of Outdoor-Indoor Transmission Class.

4. E1886: Standard Test Method for Performance of Exterior Windows, Curtain Walls, Doors, and Impact Protective Systems Impacted by Missile(s) and Exposed to Cyclic Pressure Differentials.

5. E1996: Standard Specification for Performance of Exterior Windows, Curtain Walls, Doors, and Impact Protective Systems Impacted by Windborne Debris in Hurricanes.

6. E2112: Standard Practice for Installation of Exterior Windows, Doors and Skylights.

7. E2190: Standard Specification for Insulating Glass Unit Performance and Evaluation.

F. National Association of Architectural Metal Manufacturers (NAAMM):

1. Metal Finishes Manual for Architectural and Metal Products.

G. National Fenestration Rating Council (NFRC):

1. 100: Procedure for Determining Fenestration Product U-factors.

2. 200: Procedure for Determining Fenestration Product Solar Heat Gain Coefficient and Visible Transmittance at Normal Incidence.

H. Window & Door Manufacturer’s Association (WDMA):

1. I.S.2: Standard/Specification for Windows, Doors and Skylights

1.02 PREINSTALLATION MEETINGS:

1. Preinstallation Conference: Conduct conference at Project site Review and finalize construction schedule and verify availability of materials, Installer's personnel, equipment, and facilities needed to make progress and avoid delays.

2. Review and discuss the finishing of aluminum windows that is required to be coordinated with the finishing of other aluminum work for color and finish matching.

3. Review, discuss, and coordinate the interrelationship of aluminum windows with other exterior wall components. Include provisions for anchorage, flashing, sealing perimeters, and protecting finishes.

4. Review and discuss the sequence of work required to construct a watertight and weathertight exterior building envelope.

5. Inspect and discuss the condition of substrate and other preparatory work performed by other trades.

1.03 SUBMITTALS:

A. Submit the following shop drawings in accordance with Section 01 33 00.

1. Product Data: For each type of product.

a. Include construction details, material descriptions, glazing and fabrication methods, dimensions of individual components and profiles, hardware, and finishes for aluminum windows.

2. Shop Drawings: Include plans, elevations, sections, hardware, accessories, insect screens, operational clearances, and details of installation, including anchor, flashing, and sealant installation.

3. Design calculations verifying compliance with performance criteria specified, acceptable to governing authorities having jurisdiction, prepared, signed and stamped with the seal of a registered professional engineer, as specified.

4. Samples: For each exposed product and for each color specified, 2 by 4 inches (50 by 100 mm) in size.

5. Product Schedule: For aluminum windows. Use same designations indicated on Drawings.

6. Qualification Data: For manufacturer and Installer.

7. Product Test Reports: For each type of aluminum window, for tests performed by a qualified testing agency.

a. Submit certified test reports with results and written compliances conforming to the Design Requirements specified in this section.

8. Warranties: Submit for review copies of written warranties agreeing to replace aluminum window and frame system components that fail to perform as specified.

1.04 ENVIRONMENTAL REQUIREMENTS:

A. Do not install glazing materials when ambient temperature is less than 40 degrees F (5 degrees C).

B. Maintain this minimum temperature during and after installation of glazing materials.

1.05 QUALITY ASSURANCE:

A. Manufacturer Qualifications: A manufacturer capable of fabricating aluminum windows that meet or exceed performance requirements indicated and of documenting this performance by test reports, and calculations.

B. Installer Qualifications:

1. Engage a single installer skilled, trained and with successful experience in the installation of aluminum window and frame systems and with specific skill and successful experience in the erection of the types of units and components required; and who agrees to employ only tradesmen with specific skill and successful experience in this type of work.

1.06 DELIVERY STORAGE AND HANDLING:

A. Delivery of Materials:

1. Deliver aluminum window and frame system materials, components and accessories dry and undamaged, with manufacturer’s protective wrapping intact.

2. Inspect aluminum window and frame system components upon delivery for damage. Remove and replace all damaged items at no additional cost.

B. Storage of Materials:

1. Do not store aluminum window and frame system components in contact with concrete or other materials that might cause corrosion or staining.

2. Store aluminum window and frame component under cover and in an area protected from the weather and with good air circulation around each piece. Avoid the use of non-vented plastic or canvas shelters which could create a humidity chamber. Immediately remove wrapping if it becomes wet.

3. Provide a 1/4-inch (6 mm) space between aluminum window and frame system components in order to promote air circulation.

C. Handling of Materials:

1. Do not subject aluminum window and frame components to bending or stress.

2. Do not damage edges or handle material in a manner that will cause scratches, warps or dents.

3. Handle material using appropriate hand wear and tools that do not damage finish of items to remain exposed.

1.07 PROJECT/SITE CONDITIONS:

A. Protection: Provide continuous protection of materials against damage primarily by storing materials under cover and above ground and away from other construction traffic.

1. Do not install aluminum windows and frames until all work that could damage aluminum window and frame systems has been completed.

2. Provide temporary closures until construction sequencing allows installation of aluminum window and frame systems at a time when the systems will not be subject to construction damages of any kind.

B. Scheduling and Coordination:

1. Review installation procedures under other Sections and coordinate them with the work specified herein.

C. Field Measurements:

1. Verify dimensions in areas of installation before fabrication and indicate dimensions on Working Drawings. Coordinate fabrication schedule with construction progress to avoid delay.

1.08 WARRANTY:

A. General Warranty: The special warrantees specified in this Article shall not deprive the Owner of other rights or remedies the Owner may otherwise have under the Contract Documents and shall be in addition to, and run concurrent with, other warranties made by Contractor under the Contract Documents.

B. Manufacturer's Warranty: Manufacturer agrees to repair or replace aluminum windows that fail in materials or workmanship within specified warranty period.

1. Failures include, but are not limited to, the following:

a. Failure to meet performance requirements.

b. Structural failures including excessive deflection, water leakage, condensation, and air infiltration.

c. Deterioration of materials and finishes beyond normal weathering.

d. Failure of insulating glass.

C. Special Warrantees: Provide the following:

1. Provide written warranty, signed by the manufacturer and running to benefit of the Owner, agreeing to replace aluminum window and frame finish that shows excessive wear, as specified, and stating that the coil and spray coated polyvinylidene fluoride-based coating specified complies with the following:

a. Coating shall not spall, check, craze, peel or otherwise lose adhesion for a period of ten years from the date of installation, to the extent that such shall create unsightly conditions, impair the intended architectural qualities of the building or otherwise fail to meet performance criteria specified, when viewed from a distance of 5 feet-0 inches (1500 mm) from the item.

b. In the event that the coil coated polyvinylidene fluoride-based coating fails to meet the specified standards the manufacturer shall, at its own expense, replace or field paint, at the discretion of the Owner, all areas affected by the failure. In the event that repainting is selected, it shall be done at mutually agreeable intervals throughout the term of the warranty.

c. The warranty shall not apply where any failure is caused by accidents, or any external conditions or forces beyond the control of the manufacturer.

D. Warranty Period:

1. Window: 10 years from date of Substantial Completion.

2. Glazing Units: 10years from date of Substantial Completion

3. Aluminum Finish: 10years from date of Substantial Completion

PART 2 - PRODUCTS

2.01 SYSTEM DESCRIPTION:

A. This Section describes exterior, high-performance, minimum 3-1/4-inch frame depth, factory-fabricated and factory-glazed, aluminum windows with integral structural polyurethane thermal-breaks and applied muntins complying with the requirements of AAMA/NWWDA 101/I.S. 2 - Architectural Performance Class and Section 4 - Optional Performance Grades, all with Architectural Class I anodized finish all designed, detailed and fabricated as required to resist specified loadings, and resistance to air and water penetration specified and in accordance with the requirements of governing authorities having jurisdiction; associated high-performance operating hardware, auxiliary system items, accessories, fasteners and similar items for completely functioning systems.

2.02 MANUFACTURERS:

A. EFCO Corporation; a Pella company.

B. Graham Architectural Products Corp.

C. Kawneer North America; an Alcoa company.

D. TRACO.

E. Wausau Window and Wall Systems.

F. Winco.

G. Source Limitations: Obtain aluminum windows from single source from single manufacturer.

2.03 WINDOW PERFORMANCE REQUIREMENTS:

A. Product Standard: Comply with AAMA/WDMA/CSA 101/I.S.2/A440 for definitions and minimum standards of performance, materials, components, accessories, and fabrication unless more stringent requirements are indicated.

1. Window Certification: AMMA certified with label attached to each window.

B. Performance Class and Grade: AAMA/WDMA/CSA 101/I.S.2/A440 as follows:

1. Minimum Performance Class: HC

2. Minimum Performance Grade: 35

C. Thermal Transmittance: NFRC 100 maximum whole-window U-factor of 0.35 Btu/sq. ft. x h x degrees F (2.0 W/sq. m x K).

D. Solar Heat-Gain Coefficient (SHGC): NFRC 200 maximum whole-window SHGC of 0.30.

E. Condensation-Resistance Factor (CRF): Provide aluminum windows tested for thermal performance according to AAMA 1503, showing a CRF of 45 52 Thermal Movements: Provide aluminum windows, including anchorage, that allow for thermal movements resulting from the following maximum change (range) in ambient and surface temperatures by preventing buckling, opening of joints, overstressing of components, failure of joint sealants, failure of connections, and other detrimental effects. Base engineering calculation on surface temperatures of materials due to both solar heat gain and nighttime-sky heat loss.

1. Temperature Change:120 degrees F (67 degrees C), ambient; 180 degrees F (100 degrees C) material surfaces.

F. Outside-Inside Transmission Class (OITC): Rated for not less than [22] [26] [30] OITC when tested for laboratory sound transmission loss according to ASTM E90 and determined by ASTM E1332.

G. Windborne-Debris Resistance: Capable of resisting impact from windborne debris based on testing glazed windows identical to those specified, according to ASTM E1886 and testing information in ASTM E1996 and requirements of authorities having jurisdiction.

2.04 ALUMINUM WINDOWS:

A. Operating Types: Provide the following operating types in locations indicated on Drawings:

1. Fixed.

B. Frames and Sashes: Aluminum extrusions complying with AAMA/WDMA/CSA 101/I.S.2/A440.

1. Thermally Improved Construction: Fabricate frames, sashes, and muntins with an integral, concealed, low-conductance thermal barrier located between exterior materials and window members exposed on interior side in a manner that eliminates direct metal-to-metal contact.

C. Glass: Clear annealed glass, ASTM C1036, Type 1, Class 1, q3.

1. Kind: Fully tempered.

D. Insulating-Glass Units: ASTM E2190

1. Glass: ASTM C1036, Type 1, Class 1, q3.

a. Tint: Gray

b. Kind: Fully tempered

2. Lites: Two.

3. Filling: Fill space between glass lites with argon

4. Low-E Coating: Sputtered on second or third surface.

E. Glazing System: Manufacturer's standard factory-glazing system that produces weathertight seal.

1. fastened.

2.05 FABRICATION:

A. Fabricate aluminum windows in sizes indicated. Include a complete system for assembling components and anchoring windows.

B. Glaze aluminum windows in the factory.

C. Weather strip each operable sash to provide weathertight installation.

D. Weep Holes: Provide weep holes and internal passages to conduct infiltrating water to exterior.

E. Provide water-shed members above side-hinged sashes and similar lines of natural water penetration.

F. Mullions: Provide mullions and cover plates, matching window units, complete with anchors for support to structure and installation of window units. Allow for erection tolerances and provide for movement of window units due to thermal expansion and building deflections, as indicated. Provide mullions and cover plates capable of withstanding design wind loads of window units.

G. Complete fabrication, assembly, finishing, hardware application, and other work in the factory to greatest extent possible. Disassemble components only as necessary for shipment and installation.

2.06 GENERAL FINISH REQUIREMENTS:

A. Comply with NAAMM's "Metal Finishes Manual" for recommendations for applying and designating finishes.

B. Protect mechanical finishes on exposed surfaces from damage by applying a strippable, temporary protective covering before shipping.

C. Appearance of Finished Work: Variations in appearance of abutting or adjacent pieces are acceptable if they are within one-half of the range of accepted Samples. Noticeable variations in the same piece are not acceptable. Variations in appearance of other components are acceptable if they are within the range of accepted Samples and are assembled or installed to minimize contrast.

2.07 ALUMINUM FINISHES:

A. Finish designations prefixed by AA comply with the system established by the Aluminum Association for designating aluminum finishes.

B. Class I, Clear Anodic Finish: AA-M12C22A41 (Mechanical Finish: nonspecular as fabricated; Chemical Finish: etched, medium matte; Anodic Coating: Architectural Class I, clear coating 0.018 mm or thicker) complying with AAMA 611.

PART 3 - EXECUTION

3.01 EXAMINATION:

A. Examine openings, substrates, structural support, anchorage, and conditions, with Installer present, for compliance with requirements for installation tolerances and other conditions affecting performance of the Work.

B. Verify rough opening dimensions, levelness of sill plate, and operational clearances.

C. Examine wall flashings, vapor retarders, water and weather barriers, and other built-in components to ensure weathertight window installation.

D. Proceed with installation only after unsatisfactory conditions have been corrected.

3.02 INSTALLATION:

A. All windows shall be installed by factory-trained erectors in strict accordance with installation data provided by accepted shop drawing submittal, and the requirements of these Specifications.

B. Do not install component parts that are observed to be defective in any way, including warped, bowed, dented, abraded and broken members, and including damaged glass.

C. Do not cut, or trim, component parts during erection, in a manner that would damage the finish, decrease the strength, or result in a visual imperfection or a failure in performance of the custom aluminum window and frame systems. Return component parts which require alteration to the shop for refabrication, if possible, or for replacement with new parts.

D. Install component parts level, plumb, true to line and with uniform joints and reveals. Provide required support secured to structure with non-staining and noncorrosive shims, anchors, fasteners, spacers and fillers. Use erection equipment that will not mar or stain finished surfaces and will not damage the component parts.

E. Apply a bituminous coating of approximately 30-mil (0.76 mm) dry film thickness, on concealed contact surfaces of dissimilar materials before installation, wherever there is the possibility of corrosive or electrolytic action.

F. Apply sealant in accordance with manufacturer’s written recommendations at joints, wipe off excess and leave exposed sealant surface clean and smooth.

G. Anchor components parts securely in place as shown, by bolting, or other permanent mechanical attachment system, which will comply with performance requirements and permit movements which are intended or necessary.

H. Comply with manufacturer's written instructions for installing windows, hardware, accessories, and other components. For installation procedures and requirements not

addressed in manufacturer's written instructions, comply with installation requirements in ASTM E2112.

I. Install windows and components to drain condensation, water penetrating joints, and moisture migrating within windows to the exterior.

3.03 FIELD QUALITY CONTROL: not used

3.04 PROTECTION:

A. Contractor shall provide protective treatment and other precautions required through the remainder of the construction period, to ensure that window units will be without damage or deterioration, other than normal weathering at time of Final Acceptance.

B. Contractor shall advise Engineer, in writing, of protection and surveillance requirements that Contractor shall provide at no additional expense to the Owner, to insure that aluminum windows and frame system will be without damage or deterioration at the time of Final Acceptance by the Owner.

C. Where protective coating has been supplied, remove coating completely immediately before installation and when construction activities no longer require its retention.

3.05 ADJUSTMENT:

A. All windows shall be adjusted for smooth operation and weathertight closure providing a tight fit at contact points and at weather-stripping after installation is complete and readjusted when necessary prior to Substantial Completion.

B. At the completion of the work, restore adjacent work, marred by the work of this Section, to an undamaged and clean condition.

C. Adjacent work that has been physically damaged, or that does not respond adequately to cleaning, shall be replaced with new materials at no additional expense to the Owner.

3.06 CLEANING:

A. Clean aluminum surfaces immediately after installation, exercising care to avoid damage of finish. Lubricate hardware and other moving parts.

B. Maintain the aluminum window and frame systems and glazing in a clean condition throughout the construction period, so that they will be without any evidence of deterioration or damage, other than the effects of normal weathering, at the time of Final Acceptance.

C. Select methods of cleaning that will promote the achievement of uniform appearance and stabilized colors and textures for materials that weather or age with exposure.

3.07 CLOSEOUT ACTIVITIES:

A. Provide in accordance with Section 01 77 00.

END OF SECTION

SECTION 08 71 00

FINISH HARDWARE

PART 1 - GENERAL

1.01 DESCRIPTION:

A. Provide finish hardware as indicated and in compliance with Contract Documents.

1. Section Includes:

a. Finish hardware for doors as specified and as listed in "Hardware Groups" and required by actual conditions. Mechanical door hardware for the following:

(1) Swinging doors.

b. Screws, special screws, bolts, special bolts, expansion shields, and other devices for proper application of hardware.

B. General Requirements:

1. Provide items, articles, materials, operations and methods listed, mentioned or scheduled herein or on drawings, in quantities as required to complete project. Provide hardware that functions properly. Prior to furnishing hardware, advise Engineer of items that will not operate properly, are improper for conditions, or will not remain permanently anchored.

1.02 REFERENCES:

A. American National Standards Institute (ANSI):

1. A117.1: Accessible and Usable Buildings and Facilities.

B. ASTM International (ASTM):

1. E283: Standard Test Method for Determining Rate of Air Leakage Through Exterior Windows, Curtain Walls, and Doors Under Specified Pressure Differences Across the Specimen.

C. Builders Hardware Manufacturers Association (BHMA):

1. A156.1: Butts and Hinges.

2. A156.2: Bored and Preassembled Locks & Latches.

3. A156.4: Door Controls - Closers.

4. A156.5: Auxiliary Locks & Associated Products.

5. A156.6: Architectural Door Trim.

6. A156.8: Door Controls - Overhead Stops and Holders.

7. A156.12: Interconnected Locks.

8. A156.16: Auxiliary Hardware.

9. A156.18: Materials and Finishes.

10. A156.21: Thresholds.

11. A156.22: Door Gasketing and Edge Seal Systems.

12. A156.28: Recommended Practices for Mechanical Keying Systems.

13. A156.29: Exit Locks, Exit Alarms, Alarms for Exit Devices.

D. Hollow Metal Manufacturers Association (HMMA):

1. 831: Recommended Hardware Locations for Hollow Metal Doors and Frames.

E. Steel Door Institute (SDI):

1. A250.6: Hardware on Standard Steel Doors (Reinforcement & Application).

2. A250.8: Recommended Specifications for Standard Steel Doors and Frames

1.03 SUBMITTALS:

A. Submit the following shop drawings in accordance with Section 01 33 00.

B. Product Data: For each type of product indicated. Include construction and installation details, material descriptions, dimensions of individual components and profiles, and finishes.

1. Other Submittals:

a. Door Hardware Schedule: Prepared by or under the supervision of Installer, detailing fabrication and assembly of door hardware, as well as installation procedures and diagrams. Coordinate final door hardware schedule with doors, frames, and related work to ensure proper size, thickness, hand, function, and finish of door hardware.

(1) Submittal Sequence: Submit door hardware schedule concurrent with submissions of Product Data, Samples, and Shop Drawings. Coordinate submission of door hardware schedule with scheduling

requirements of other work to facilitate the fabrication of other work that is critical in Project construction schedule.

(2) Format: Use same scheduling sequence and format and use same door numbers as in the Contract Documents.

(3) Content: Include the following information:

(a) Identification number, location, hand, fire rating, size, and material of each door and frame.

(b) Locations of each door hardware set cross-referenced to Drawings on floor plans and to door and frame schedule.

(c) Complete designations, including name and manufacturer, type, style, function, size, quantity, function, and finish of each door hardware product.

(d) Fastenings and other pertinent information.

(e) Explanation of abbreviations, symbols, and codes contained in schedule.

(f) Mounting locations for door hardware.

(g) List of related door devices specified in other Sections for each door and frame.

b. Keying Schedule: Prepared by or under the supervision of Installer, detailing Owner's final keying instructions for locks. Include schematic keying diagram and index each key set to unique door designations that are coordinated with the Contract Documents.

C. Qualification Data: For Supplier and Installer.

D. Maintenance Data: For each type of door hardware to include in maintenance manuals. Include final hardware and keying schedule.

E. Warranty: Special warranty specified in this Section.

1.04 QUALITY ASSURANCE:

A. Installer Qualifications: Supplier of products and an employer of workers trained and approved by product manufacturers provided about door hardware and keying.

1. Scheduling Responsibility: Preparation of door hardware and keying schedules.

B. Means of Egress Doors: Latches do not require more than 15 lbf (67 N) to release the latch. Locks do not require use of a key, tool, or special knowledge for operation.

C. Accessibility Requirements: For door hardware on doors in an accessible route, comply with ICC/ANSI A117.1

1. Provide operating devices that do not require tight grasping, pinching, or twisting of the wrist and that operate with a force of not more than 5 lbf (22.2 N).

2. Comply with the following maximum opening-force requirements:

a. Interior, Non-Fire-Rated Hinged Doors: 5 lbf (22.2 N) applied perpendicular to door.

3. Bevel raised thresholds with a slope of not more than 1:2. Provide thresholds not more than 1/2 inch (13 mm) high

4. Adjust door closer sweep periods so that, from an open position of 70 degrees, the door will take at least 3 seconds to move to a point 3 inches (75 mm) from the latch, measured to the leading edge of the door.

D. Keying Conference: Conduct conference at Project site to comply with requirements in Division 01 "Project Management and Coordination" Section. Incorporate keying conference decisions into final keying schedule after reviewing door hardware keying system including, but not limited to, the following:

1. Function of building, flow of traffic, purpose of each area, degree of security required, and plans for future expansion.

2. Preliminary key system schematic diagram.

3. Requirements for key control system.

4. Requirements for access control.

5. Address for delivery of keys.

1.05 DELIVERY STORAGE AND HANDLING:

A. Inventory door hardware on receipt and provide secure lock-up for door hardware delivered to Project site.

B. Tag each item or package separately with identification coordinated with the final door hardware schedule, and include installation instructions, templates, and necessary fasteners with each item or package.

C. Deliver keys to manufacturer of key control system for subsequent delivery to Owner.

D. Deliver keys to Owner by registered mail or overnight package service.

1.06 COORDINATION:

A. Installation Templates: Distribute for doors, frames, and other work specified to be factory prepared. Check Shop Drawings of other work to confirm that adequate provisions are made for locating and installing door hardware to comply with indicated requirements.

B. Existing Openings: Where hardware components are scheduled for application to existing construction or where modifications to existing door hardware are required, field verify existing conditions and coordinate installation of door hardware to suit opening conditions and to provide proper door operation.

1.07 WARRANTY:

A. Special Warranty: Manufacturer's standard form in which manufacturer agrees to repair or replace components of door hardware that fail in materials or workmanship within specified warranty period.

1. Failures include, but are not limited to, the following:

a. Structural failures including excessive deflection, cracking, or breakage.

b. Faulty operation of doors and door hardware.

c. Deterioration of metals, metal finishes, and other materials beyond normal weathering and use.

2. Warranty Period: Two years from date of Substantial Completion, unless otherwise indicated.

a. Manual Closers: 10 years from date of Substantial Completion.

1.08 MAINTENANCE SERVICE:

A. Maintenance Tools and Instructions: Furnish a complete set of specialized tools and maintenance instructions for Owner's continued adjustment, maintenance, and removal and replacement of door hardware.

B. Maintenance Service: Beginning at Substantial Completion, provide six months' full maintenance by skilled employees of door hardware Installer. Include, at six-month intervals for two years, preventive maintenance, repair or replacement of worn or defective components, lubrication, cleaning, and adjusting as required for proper door and door hardware operation. Provide parts and supplies that are the same as those used in the manufacture and installation of original products.

PART 2 - PRODUCTS

2.01 SCHEDULED DOOR HARDWARE:

A. Provide door hardware for each door as scheduled on Drawings and as noted herein to comply with requirements in this Section.

1. Door Hardware Sets: Provide quantity, item, size, finish or color indicated, and products equivalent in function and comparable in quality to named products.

B. Designations: Requirements for design, grade, function, finish, size, and other distinctive qualities of each type of door hardware are indicated in Part 3 "Door Hardware Schedule" Article. Products are identified by using door hardware designations, as follows:

1. Named Manufacturers' Products: Manufacturer and product designation are listed for each door hardware type required for the purpose of establishing minimum requirements. Manufacturers' names are abbreviated in Part 3 "Door Hardware Schedule" Article.

2. References to BHMA Designations: Provide products complying with these designations and requirements for description, quality, and function.

2.02 HINGES:

A. Hinges: BHMA A156.1. Provide template-produced hinges for hinges installed on hollow-metal doors and hollow-metal frames. Finish US32D.

1. Manufacturers:

a. PBB, Inc.

b. Hager Companies.

c. IVES Hardware; an Ingersoll-Rand company.

d. Lawrence Hardware Inc.

e. McKinney Products Company; an ASSA ABLOY Group company.

2.03 STANLEY COMMERCIAL HARDWARE; DIV. OF THE STANLEY WORKS.MECHANICAL LOCKS:

A. Lock Functions: As indicated in door hardware schedule.

B. Finish : US26D

C. Lock Throw: Comply with testing requirements for length of bolts required for labeled fire doors, and as follows:

1. Bored Locks: Minimum 1/2-inch (13-mm) latch bolt throw.

2. Deadbolts: Minimum 1.25-inch (32-mm) bolt throw.

D. Lock Backset: 2-3/4 inches (70 mm), unless otherwise indicated.

E. Lock Trim:

1. Description: As indicated on Drawings.

F. Strikes: Provide manufacturer's standard strike for each lock bolt complying with requirements indicated for applicable lock and with strike box and curved lip extended to protect frame; finished to match lock or latch.

1. Flat-Lip Strikes: For locks with three-piece antifriction latch bolts, as recommended by manufacturer.

2. Extra-Long-Lip Strikes: For locks used on frames with applied wood casing trim.

3. Rabbet Front and Strike: Provide on locksets for rabbeted meeting stiles.

G. Bored Locks: BHMA A156.2; Grade 1; Series 4000.

1. Manufacturers:

a. Schlage Commercial Lock Division; an Ingersoll-Rand company.

b. Best Access Systems; Div. of Stanley Security Solutions, Inc.

c. Corbin Russwin Architectural Hardware; n ASSA ABLOY Group Company.

d. SARGENT Manufacturing Company; an ASSA ABLOY Group company.

e. Yale Security Inc.; an ASSA ABLOY Group company.

2.04 LOCK CYLINDERS:

A. Lock Cylinders: Tumbler type, constructed from brass or bronze, stainless steel, or nickel silver.

1. Manufacturer: Same manufacturer as for locking devices.

B. Standard Lock Cylinders: BHMA A156.5; Grade 1; permanent cores that are interchangeable; face finished to match lockset.

2.05 KEYING:

A. Keying System: Factory registered, complying with guidelines in BHMA A156.28, Appendix A. Incorporate decisions made in keying conference.

1. Master Key System: Change keys and a master key operate cylinders or as directed by Owner.

2. Existing System:

a. Master key or grand master key locks to Owner's existing system.

3. Keyed Alike: Key all cylinders to same change key.

B. Keys: Brass.

1. Stamping: Permanently inscribe each key with a visual key control number and include the following notation:

a. Notation: "DO NOT DUPLICATE."

2. Quantity: In addition to one extra key blank for each lock, provide the following:

a. Cylinder Change Keys: Three.

b. Master Keys: Five.

2.06 KEY CONTROL SYSTEM:

A. Key Control Cabinet: BHMA A156.5; metal cabinet with baked-enamel finish; containing key-holding hooks, labels, 2 sets of key tags with self-locking key holders, key-gathering envelopes, and temporary and permanent markers; with key capacity of 150 percent of the number of locks.

1. Manufacturers:

a. American Key Boxes and Cabinets.

b. GE Security, Inc.

c. HPC, Inc.

d. Lund Equipment Co., Inc.

e. MMF Industries.

f. Tri Palm International.

2. Wall-Mounted Cabinet: Cabinet with hinged-panel door equipped with key-holding panels and pin-tumbler cylinder door lock.

2.07 SURFACE CLOSERS:

A. Surface Closers: BHMA A156.4; rack-and-pinion hydraulic type with adjustable sweep and latch speeds controlled by key-operated valves and forged-steel main arm. Comply with manufacturer's written recommendations for size of door closers depending on size of door, exposure to weather, and anticipated frequency of use. Provide factory-sized closers, adjustable to meet field conditions and requirements for opening force. Finish powder coated with SRI treatment for corrosion resistance exceeding ANSI standard.

1. Manufacturers:

a. LCN Closers; an Ingersoll-Rand company.

b. Corbin Russwin Architectural Hardware; an ASSA ABLOY Group company.

c. DORMA Architectural Hardware; Member of The DORMA Group North America.

d. Norton Door Controls; an ASSA ABLOY Group company.

e. Rixson Specialty Door Controls; an ASSA ABLOY Group company.

f. SARGENT Manufacturing Company; an ASSA ABLOY Group company.

g. Yale Security Inc.; an ASSA ABLOY Group company.

2.08 STOPS:

A. Wall- Stops: BHMA A156.16; aluminum base metal. Finish anodized aluminum. Sill mill aluminum.

1. Manufacturers:

a. Trimco

b. Don-Jo Mfg., Inc.

c. IVES Hardware; an Ingersoll-Rand company.

d. Stanley Commercial Hardware; Div. of The Stanley Works.

2.09 DOOR GASKETING (SEALS AND SWEEPS):

A. Door Gasketing: BHMA A156.22; air leakage not to exceed 0.50 cfm per foot (0.000774 cu. m/s per m) of crack length for gasketing other than for smoke control, as

tested according to ASTM E283; with resilient or flexible seal strips that are easily replaceable and readily available from stocks maintained by manufacturer.

1. Manufacturers:

    a. National Guard Products.

    b. Hager Companies.

    c. Pemko Manufacturing Co.; an ASSA ABLOY Group company.

    d. Reese Enterprises, Inc.

    e. Sealeze; a unit of Jason Incorporated.

    f. Zero International.

2.10 THRESHOLDS:

A. Thresholds: BHMA A156.21; fabricated to full width of opening indicated.

1. Manufacturers:

    a. National Guard Products

    b. Pemko Manufacturing Co.; an ASSA ABLOY Group company.

    c. Reese Enterprises, Inc.

    d. Sealeze; a unit of Jason Incorporated.

    e. Zero International.

2.11 PROTECTION (KICK) PLATES

C. Manufacturers:

1. Hager.

2. Trimco.

D. Fasteners: Provide manufacturer's standard exposed fasteners for door trim units. Machine screws or self-tapping screw.

E. Fabricate protection plates not more than 1-1/2 inch less than door width on stop side and not more than 1/2 inch less than door width on pull side, by 12 inches high..

1. Metal Plates: Stainless steel, 0.050 inch (U.S. 18 ga) beveled edges, with countersunk screw holes of intervals of not over 6 inch on all four sides.

2. Provide plate all doors push side.

2.12 FABRICATION:

A. Manufacturer's Nameplate: Do not provide products that have manufacturer's name or trade name displayed in a visible location except in conjunction with required fire-rated labels and as otherwise accepted by Engineer.

1. Manufacturer's identification is permitted on rim of lock cylinders only.

B. Base Metals: Produce door hardware units of base metal indicated, fabricated by forming method indicated, using manufacturer's standard metal alloy, composition, temper, and hardness. Furnish metals of a quality equal to or greater than that of specified door hardware units and BHMA A156.18.

C. Fasteners: Provide door hardware manufactured to comply with published templates prepared for machine, wood, and sheet metal screws. Provide screws that comply with commercially recognized industry standards for application intended, except aluminum fasteners are not permitted. Provide Phillips flat-head screws with finished heads to match surface of door hardware, unless otherwise indicated.

1. Concealed Fasteners: For door hardware units that are exposed when door is closed, except for units already specified with concealed fasteners. Do not use through bolts for installation where bolt head or nut on opposite face is exposed unless it is the only means of securely attaching the door hardware. Where through bolts are used on hollow door and frame construction, provide sleeves for each through bolt.

2. Spacers or Sex Bolts: For through bolting of hollow-metal doors.

3. Gasketing Fasteners: Provide noncorrosive fasteners for exterior applications and elsewhere as indicated.

2.13 FINISHES:

A. Provide finishes complying with BHMA A156.18 as indicated in door hardware schedule.

B. Protect mechanical finishes on exposed surfaces from damage by applying a strippable, temporary protective covering before shipping.

C. Appearance of Finished Work: Variations in appearance of abutting or adjacent pieces are acceptable if they are within one-half of the range of accepted Samples. Noticeable variations in the same piece are not acceptable. Variations in appearance of other components are acceptable if they are within the range of accepted Samples and are assembled or installed to minimize contrast.

PART 3 - EXECUTION

3.01 EXAMINATION:

A. Examine doors and frames, with Installer present, for compliance with requirements for installation tolerances, labeled fire-rated door assembly construction, wall and floor construction, and other conditions affecting performance.

B. Examine roughing-in for electrical power systems to verify actual locations of wiring connections before electrified door hardware installation.

C. Proceed with installation only after unsatisfactory conditions have been corrected.

3.02 PREPARATION:

A. Steel Doors and Frames: For surface applied door hardware, drill and tap doors and frames according to ANSI/SDI A250.6.

B. Wood Doors: Comply with DHI WDHS.5 "Recommended Hardware Reinforcement Locations for Mineral Core Wood Flush Doors."

3.03 INSTALLATION:

A. Mounting Heights: Mount door hardware units at heights indicated on Drawings to comply with the following unless otherwise indicated or required to comply with governing regulations.

1. Standard Steel Doors and Frames: ANSI/SDI A250.8.

2. Custom Steel Doors and Frames: HMMA 831.

3. Wood Doors: DHI WDHS.3, "Recommended Locations for Architectural Hardware for Wood Flush Doors."

B. Install each door hardware item to comply with manufacturer's written instructions. Where cutting and fitting are required to install door hardware onto or into surfaces that are later to be painted or finished in another way, coordinate removal, storage, and reinstallation of surface protective trim units with finishing work specified in Division 09 Sections. Do not install surface-mounted items until finishes have been completed on substrates involved.

1. Set units level, plumb, and true to line and location. Adjust and reinforce attachment substrates as necessary for proper installation and operation.

2. Drill and countersink units that are not factory prepared for anchorage fasteners. Space fasteners and anchors according to industry standards.

C. Hinges: Install types and in quantities indicated in door hardware schedule but not fewer than the number recommended by manufacturer for application indicated or one hinge

for every 30 inches (750 mm) of door height, whichever is more stringent, unless other equivalent means of support for door, such as spring hinges or pivots, are provided.

D. Intermediate Offset Pivots: Where offset pivots are indicated, provide intermediate offset pivots in quantities indicated in door hardware schedule but not fewer than one intermediate offset pivot per door and one additional intermediate offset pivot for every 30 inches (750 mm) of door height greater than 90 inches (2286 mm).

E. Lock Cylinders: Install construction cores to secure building and areas during construction period.

1. Replace construction cores with permanent cores as indicated in keying schedule.

2. Furnish permanent cores to Owner for installation.

F. Key Control System: Tag keys and place them on markers and hooks in key control system cabinet, as determined by final keying schedule.

G. Boxed Power Supplies: Locate power supplies as indicated or, if not indicated, above accessible ceilings in equipment room. Verify location with Engineer.

1. Configuration: Provide least number of power supplies required to adequately serve doors with electrified door hardware.

H. Thresholds: Set thresholds for exterior doors and other doors indicated in full bed of sealant complying with requirements specified in Division 07 "Joint Sealants" Section.

I. Stops: Provide floor stops for doors unless wall or other type stops are indicated in door hardware schedule. Do not mount floor stops where they will impede traffic.

J. Perimeter Gasketing: Apply to head and jamb, forming seal between door and frame.

K. Meeting Stile Gasketing: Fasten to meeting stiles, forming seal when doors are closed.

L. Door Bottoms: Apply to bottom of door, forming seal with threshold when door is closed.

3.04 FIELD QUALITY CONTROL:

A. Independent Architectural Hardware Consultant: Contractor will engage a qualified independent Architectural Hardware Consultant to perform inspections and to prepare inspection reports.

1. Independent Architectural Hardware Consultant will inspect door hardware and state in each report whether installed work complies with or deviates from requirements, including whether door hardware is properly installed and adjusted.

3.05 ADJUSTING:

A. Initial Adjustment: Adjust and check each operating item of door hardware and each door to ensure proper operation or function of every unit. Replace units that cannot be adjusted to operate as intended. Adjust door control devices to compensate for final operation of heating and ventilating equipment and to comply with referenced accessibility requirements.

1. Spring Hinges: Adjust to achieve positive latching when door is allowed to close freely from an open position of 30 degrees.

2. Electric Strikes: Adjust horizontal and vertical alignment of keeper to properly engage lock bolt.

3. Door Closers: Adjust sweep period to comply with accessibility requirements and requirements of authorities having jurisdiction.

B. Occupancy Adjustment: Approximately six months after date of Substantial Completion, Installer's Architectural Hardware Consultant shall examine and readjust each item of door hardware, including adjusting operating forces, as necessary to ensure function of doors, door hardware, and electrified door hardware.

3.06 CLEANING AND PROTECTION:

A. Clean adjacent surfaces soiled by door hardware installation.

B. Clean operating items as necessary to restore proper function and finish.

C. Provide final protection and maintain conditions that ensure that door hardware is without damage or deterioration at time of Substantial Completion.

3.07 CONTRACT CLOSEOUT:

A. Provide in accordance with Section 01 77 00.

END OF SECTION

SECTION 08 91 00

LOUVERS AND VENTS

PART 1 - GENERAL

1.01 DESCRIPTION:

A. Provide aluminum louvers and vents as indicated and in compliance with Contract Documents.

1. Section Includes:

a. Fixed, extruded-aluminum louvers.

1.02 REFERENCES:

A. Aluminum Association (AA):

1. AA-C12C42: Chemical Finish

2. AA-C12C42R1x: Chemical Finish

3. M12C22A31: Mechanical Finish

4. M12C22A41: Anodized Plus Finish American Architectural Manufacturers Association (AAMA):

5. 611: Voluntary Specification for Anodized Architectural Aluminum

B. Air Movement and Control Association Inc. (AMCA):

1. 500-L: Laboratory Methods of Testing Louvers for Rating

C. ASTM International (ASTM):

1. B209/B209M: Standard Specification for Aluminum and Aluminum-Alloy Sheet and Plate

2. B221/B221M: Standard Specification for Aluminum and Aluminum-Alloy Extruded Bars, Rods, Wire, Profiles, and Tubes.

3. D1187: Type II – Specification for Asphalt-Base Emulsions (For Metal Surfaces).

4. E90: Standard Test Method for Laboratory Measurement of Airborne Sound Transmission Loss of Building Partitions and Elements

5. E413: Classification for Rating Sound Insulation

6. E488: Standard Test Methods for Strength of Anchors in Concrete and Masonry Elements.

7. E966: Standard Guide for Field Measurements of Airborne Sound Insulation of Building Facades and Facade Elements

8. E1332: Standard Classification for Determination of Outdoor-Indoor Transmission Class

D. American Society of Civil Engineers (ASCE):

1. 7: Minimum Design Loads for Buildings and Other Structures - Includes Supplement No. 1

E. American Welding Society (AWS):

1. D1.2/D1.2M: Structural Welding Code - Aluminum

1.03 DEFINITIONS:

A. Louver Terminology: Definitions of terms for metal louvers contained in AMCA 501 apply to this Section unless otherwise defined in this Section or in referenced standards.

B. Horizontal Louver: Louver with horizontal blades; i.e., the axes of the blades are horizontal.

C. Drainable-Blade Louver: Louver with blades having gutters that collect water and drain it to channels in jambs and mullions, which carry it to bottom of unit and away from opening.

1.04 PERFORMANCE REQUIREMENTS:

A. Delegated Design: Design louvers, including comprehensive engineering analysis by a qualified professional engineer, using structural and seismic performance requirements and design criteria indicated.

B. Structural Performance: Louvers shall withstand the effects of gravity loads and the following loads and stresses within limits and under conditions indicated without permanent deformation of louver components, noise or metal fatigue caused by louver blade rattle or flutter, or permanent damage to fasteners and anchors. Wind pressures shall be considered to act normal to the face of the building.

1. Wind Loads: Determine loads based on pressures as indicated on Drawings.

C. Seismic Performance: Louvers, including attachments to other construction, shall withstand the effects of earthquake motions determined according to SEI/ASCE 7and as shown on drawings.

D. Thermal Movements: Allow for thermal movements from ambient and surface temperature changes, without buckling, opening of joints, overstressing of components, failure of connections, or other detrimental effects.

1. Temperature Change (Range):120 degrees F (67 degrees C), ambient; 180 degrees F (100 degrees C), material surfaces.

E. Louver Performance Ratings: Provide louvers complying with requirements specified, as demonstrated by testing manufacturer's stock units identical to those provided, except for length and width according to AMCA 500-L.

1.05 SUBMITTALS:

A. Submit the following shop drawings in accordance with Section 01 33 00.

1. Product Data: For each type of product indicated.

a. That louvers provided bear AMCA seal, include printed catalog catalogue pages showing specified models with appropriate AMCA Certified Ratings Seals.

2. Shop Drawings: For louvers and accessories. Include plans, elevations, sections, details, and attachments to other work. Show frame profiles and blade profiles, angles, and spacing.

a. Show weep paths, gaskets, flashing, sealant, and other means of preventing water intrusion.

b. Show mullion profiles and locations.

3. Product Test Reports: Based on evaluation of comprehensive tests performed according to AMCA 500-L by a qualified testing agency or by manufacturer and witnessed by a qualified testing agency, for each type of louver and showing compliance with performance requirements specified.

1.06 QUALITY ASSURANCE:

A. Comply with the requirements specified in Section 01 40 00.

B. Source Limitations: Obtain louvers from single source from a single manufacturer where indicated to be of same type, design, or factory-applied color finish.

C. Welding: Qualify procedures and personnel according to the following:

1. AWS D1.2/D1.2M, "Structural Welding Code - Aluminum."

D. SMACNA Standard: Comply with recommendations in SMACNA's "Architectural Sheet Metal Manual" for fabrication, construction details, and installation procedures.

1.07 PROJECT CONDITIONS:

A. Field Measurements: Verify actual dimensions of openings by field measurements before fabrication.

1.08 DELIVERY STORAGE AND HANDLING:

A. Brace and support units to prevent deformation during delivery.

B. Factory wrap units with accepted materials to protect finish during delivery and storage.

C. Handle units with care to prevent bending or scratching.

PART 2 - PRODUCTS

2.01 MATERIALS:

A. Aluminum Extrusions: ASTM B221/B221M, Alloy 6063-T5, T-52, or T6.

B. Aluminum Sheet: ASTM B209/B209M, Alloy 3003 or 5005 with temper as required for forming, or as otherwise recommended by metal producer for required finish.

C. Aluminum Castings: ASTM B26/B26M, Alloy 319.

D. Fasteners: Use types and sizes to suit unit installation conditions.

1. Use hex-head or Phillips pan-head screws for exposed fasteners unless otherwise indicated.

2. For fastening aluminum, use aluminum or 300 series stainless-steel fasteners.

E. Post installed Fasteners for Masonry: Torque-controlled expansion anchors, made from stainless-steel components, with capability to sustain, without failure, a load equal to 6 times the load imposed, for masonry, as determined by testing per ASTM E488, conducted by a qualified independent testing agency.

F. Bituminous Paint: Cold-applied asphalt emulsion complying with ASTM D1187.

2.02 FABRICATION, GENERAL:

A. Assemble louvers in factory to minimize field splicing and assembly. Disassemble units as necessary for shipping and handling limitations. Clearly mark units for reassembly and coordinated installation.

B. Maintain equal louver blade spacing, including separation between blades and frames at head and sill, to produce uniform appearance.

C. Fabricate frames, including integral sills, to fit in openings of sizes indicated, with allowances made for fabrication and installation tolerances, adjoining material tolerances, and perimeter sealant joints.

1. Frame Type: Channel unless otherwise indicated on drawings.

D. Include supports, anchorages, and accessories required for complete assembly.

2.03 FIXED, EXTRUDED-ALUMINUM LOVERS

A. Horizontal, Drainable-Blade Louver :

1. Manufacturers:

a. Greenheck ESD-635

b. Airolite Company, LLC (The).

c. American Warming and Ventilating, Inc.; a Mestek company.

d. Carnes Company, Inc.

e. Construction Specialties, Inc.

f. Nystrom Building Products.

g. Ruskin Company; Tomkins PLC.

2. Louver Depth: 6 inches (150 mm).

3. Frame and Blade Nominal Thickness: Not less than 0.081 inch for blades and 0.081inch for frames.

4. Mullion Type: Exposed.

5. Bird screen: ¾ in. x 0.051 flattened expanded aluminum in removable frame, inside rear mount.

6. Louver Performance Ratings:

a. Free Area: Not less than 9.4 sq. ft. for 48-inch- (1220-mm-) wide by 48-inch- (1220-mm-) high louver.

b. Point of Beginning Water Penetration: Above 1250 fpm.

c. Air Performance: Equal to Greenheck Model ESD-635.

7. AMCA Seal: Mark units with AMCA Certified Ratings Seal.

PART 3-EXECUTION

3.01 EXAMINATION:

A. Examine substrates and openings, with Installer present, for compliance with requirements for installation tolerances and other conditions affecting performance.

B. Proceed with installation only after unsatisfactory conditions have been corrected.

3.02 PREPARATION:

A. Coordinate setting drawings, diagrams, templates, instructions, and directions for installation of anchorages that are to be embedded in concrete or masonry construction. Coordinate delivery of such items to Project site.

3.03 INSTALLATION:

A. Locate and place louvers and vents level, plumb, and at indicated alignment with adjacent work.

B. Use concealed anchorages where possible. Provide brass or lead washers fitted to screws where required to protect metal surfaces and to make a weathertight connection.

C. Form closely fitted joints with exposed connections accurately located and secured.

D. Provide perimeter reveals and openings of uniform width for sealants and joint fillers, as indicated.

E. Repair finishes damaged by cutting, welding, soldering, and grinding. Restore finishes so no evidence remains of corrective work. Return items that cannot be refinished in the field to the factory, make required alterations, and refinish entire unit or provide new units.

F. Protect unpainted galvanized and nonferrous-metal surfaces that will be in contact with concrete, masonry, or dissimilar metals from corrosion and galvanic action by applying a heavy coating of bituminous paint or by separating surfaces with waterproof gaskets or nonmetallic flashing.

G. Install concealed gaskets, flashings, joint fillers, and insulation as louver installation progresses, where weathertight louver joints are required. Comply with Division 07 "Joint Sealants" Section for sealants applied during louver installation.

3.04 ADJUSTING AND CLEANING:

A. Clean exposed surfaces of louvers and vents that are not protected by temporary covering, to remove fingerprints and soil during construction period. Do not let soil accumulate during construction period.

B. Before final inspection, clean exposed surfaces with water and a mild soap or detergent not harmful to finishes. Thoroughly rinse surfaces and dry.

C. Restore louvers and vents damaged during installation and construction so no evidence remains of corrective work. If results of restoration are unsuccessful, as determined by Engineer, remove damaged units and replace with new units.

1. Touch up minor abrasions in finishes with air-dried coating that matches color and gloss of, and is compatible with, factory-applied finish coating.

3.05 CONTRACT CLOSEOUT:

A. Provide in accordance with Section 01 77 00.

END OF SECTION

SECTION 09 29 00

DRYWALL CONSTRUCTION

PART 1 - GENERAL

1.01 DESCRIPTION:

A. Provide gypsum board and accessories as indicated and in compliance with Contract Documents.

B. Section Includes:

1. Interior gypsum board.

1.02 REFERENCES:

A. ASTM International (ASTM):

1. B221/B221M: Standard Specification for Aluminum and Aluminum-Alloy Extruded Bars, Rods, Wire, Profiles, and Tubes

2. C423: Standard Test Method for Sound Absorption and Sound Absorption Coefficients by the Reverberation Room Method

3. C475/C475M: Standard Specification for Joint Compound and Joint Tape for Finishing Gypsum Board

4. C665: Standard Specification for Mineral-Fiber Blanket Thermal Insulation for Light Frame Construction and Manufactured Housing

5. C834: Standard Specification for Latex Sealants

6. C840: Standard Specification for Application and Finishing of Gypsum Board

7. C919: Standard Practice for Use of Sealants in Acoustical Applications

8. C954: Standard Specification for Steel Drill Screws for the Application of Gypsum Panel Products or Metal Plaster Bases to Steel Studs From 0.033 in. (0.84 mm) to 0.112 in. (2.84 mm) in Thickness

9. C1002: Standard Specification for Steel Self-Piercing Tapping Screws for the Application of Gypsum Panel Products or Metal Plaster Bases to Wood Studs or Steel Studs

10. C1047: Standard Specification for Accessories for Gypsum Wallboard and Gypsum Veneer Base

11. C1177/C1177M: Standard Specification for Glass Mat Gypsum Substrate for Use as Sheathing

12. C1178/C1178M: Standard Specification for Coated Glass Mat Water-Resistant Gypsum Backing Panel

13. C1278/C1278M: Standard Specification for Fiber-Reinforced Gypsum Panel

14. C1288: Standard Specification for Discrete Non-Asbestos Fiber-Cement Interior Substrate Sheets

15. C1325: Standard Specification for Non-Asbestos Fiber-Mat Reinforced Cementitious Backer Units

16. C1396/C1396M: Standard Specification for Gypsum Board

17. C1629/C1629M: Standard Classification for Abuse-Resistant Nondecorated Interior Gypsum Panel Products and Fiber-Reinforced Cement Panels

18. C1658/C1658M: Standard Specification for Glass Mat Gypsum Panels

19. D3273: Standard Test Method for Resistance to Growth of Mold on the Surface of Interior Coatings in an Environmental Chamber

20. E84: Standard Test Method for Surface Burning Characteristics of Building Materials

21. E90: Standard Test Method for Laboratory Measurement of Airborne Sound Transmission Loss of Building Partitions and Elements

22. E119: Standard Test Methods for Fire Tests of Building Construction and Materials

23. E413: Classification for Rating Sound Insulation

B. American National Standards Institute (ANSI):

1. A108.11: Interior Installation of Cementitious Backer Units

2. A118.9: Cementitious Backer Units

1.03 SUBMITTALS:

A. Submit the following shop drawings in accordance with Section 01 33 00.

B. Product Data: For each type of product.

1.05 QUALITY ASSURANCE:

A. Comply with the requirements specified in Section 01 43 00.

1.06 DELIVERY STORAGE AND HANDLING:

A. Comply with the requirements specified in Section 01 66 10.

B. Store materials inside under cover and keep them dry and protected against weather, condensation, direct sunlight, construction traffic, and other potential causes of damage. Stack panels flat and supported on risers on a flat platform to prevent sagging.

1.07 PROJECT/SITE CONDITIONS:

A. Environmental Limitations: Comply with ASTM C840 requirements or gypsum board manufacturer's written recommendations, whichever are more stringent.

B. Do not install paper-faced gypsum panels until installation areas are enclosed and conditioned.

C. Do not install panels that are wet, those that are moisture damaged, and those that are mold damaged.

1. Indications that panels are wet, or moisture damaged include, but are not limited to, discoloration, sagging, or irregular shape.

2. Indications that panels are mold damaged include, but are not limited to, fuzzy or splotchy surface contamination and discoloration.

PART 2 - PRODUCTS

2.01 PERFORMANCE REQUIREMENTS:

A. Fire-Resistance-Rated Assemblies: For fire-resistance-rated assemblies, provide materials and construction identical to those tested in assembly indicated according to ASTM E119 by an independent testing agency.

2.02 GYPSUM BOARD, GENERAL:

B. Size: Provide maximum lengths and widths available that will minimize joints in each area and that correspond with support system indicated.

2.03 INTERIOR GYPSUM BOARD:

A. Manufacturers:

1. American Gypsum.

2. CertainTeed Corp.

3. Georgia-Pacific Gypsum LLC.

4. National Gypsum Company.

5. USG Corporation.

B. Gypsum Board, Type X: ASTM C1396/C1396M.

1. Thickness: 5/8 inch (15.9 mm).

2. Long Edges: Tapered and featured (rounded or beveled) for prefilling.

2.04 TRIM ACCESSORIES:

A. Interior Trim: ASTM C1047.

1. Material: Galvanized or aluminum-coated steel sheet or rolled zinc

2. Shapes:

a. Cornerbead.

b. L-Bead: L-shaped; exposed long flange receives joint compound.

c. Expansion (control) joint.

2.05 JOINT TREATMENT MATERIALS:

A. General: Comply with ASTM C475/C475M.

B. Joint Tape:

1. Interior Gypsum Board: Paper.

C. Joint Compound for Interior Gypsum Board: For each coat use formulation that is compatible with other compounds applied on previous or for successive coats.

1. Prefilling: At open joints, rounded or beveled panel edges, and damaged surface areas, use setting-type taping compound.

2. Embedding and First Coat: For embedding tape and first coat on joints, fasteners, and trim flanges, use drying-type, all-purpose compound.

3. Fill Coat: For second coat, use drying-type, all-purpose compound.

4. Finish Coat: For third coat, use drying-type, all-purpose compound.

5. Skim Coat: For final coat of Level 5 finish, use drying-type, all-purpose compound

2.06 AUXILIARY MATERIALS:

A. General: Provide auxiliary materials that comply with referenced installation standards and manufacturer's written recommendations.

B. Laminating Adhesive: Adhesive or joint compound recommended for directly adhering gypsum panels to continuous substrate.

1. Laminating adhesive shall have a VOC content of 50 g/L or less when calculated according to 40 CFR 59, Subpart D (EPA Method 24).

C. Steel Drill Screws: ASTM C1002, unless otherwise indicated.

1. Use screws complying with ASTM C954 for fastening panels to steel members from 0.033 to 0.112 inch (0.84 to 2.84 mm) thick.

2. For fastening cementitious backer units, use screws of type and size recommended by panel manufacturer.

D. Sound Attenuation Blankets: ASTM C665, Type I (blankets without membrane facing) produced by combining thermosetting resins with mineral fibers manufactured from glass, slag wool, or rock wool.

1. Fire-Resistance-Rated Assemblies Comply with mineral-fiber requirements of assembly.

2. Non fire-resistive: Use same product as fire-resistance rated walls, minimum 1-hr.

E. Acoustical Joint Sealant: Manufacturer's standard nonsag, paintable, nonstaining latex sealant complying with ASTM C834. Product effectively reduces airborne sound transmission through perimeter joints and openings in building construction as demonstrated by testing representative assemblies according to ASTM E90.

1. Products:

a. Accumetric LLC; BOSS 824 Acoustical Sound Sealant.

b. Grabber Construction Products; Acoustical Sealant GSC.

c. Pecora Corporation.AC-20 FTR.

d. Specified Technologies, Inc.; Smoke N Sound Acoustical Sealant.

e. USG Corporation; SHEETROCK Acoustical Sealant.

2. Acoustical joint sealant shall have a VOC content of 250 g/L or less when calculated according to 40 CFR 59, Subpart D (EPA Method 24).

F. Thermal Insulation: As specified in Division 07 "Building Insulation" Section.

2.07 TEXTURE FINISHES:

A. Primer: As recommended by textured finish manufacturer.

B. Polystyrene Aggregate Ceiling Finish: Water-based, job-mixed, polystyrene aggregate finish with flame-spread and smoke-developed indexes of not more than 25 when tested according to ASTM E84.

1. Products:

a. Georgia-Pacific Gypsum LLC; ToughRock Ceiling Textures/Polystyrene.

b. National Gypsum Company; ProForm Perfect Spray.

c. USG Corporation; SHEETROCK Ceiling Spray Texture, QT.

2. Texture: Fine

C. Aggregate Wall Finish: Water-based, job-mixed, aggregated, drying-type texture finish for spray application.

1. Products:

a. CertainTeed Corp.; ProRoc Wall and Ceiling Spray Texture.

b. Georgia-Pacific Gypsum LLC; ToughRock Ceiling Textures/Vermiculite.

c. USG Corporation; SHEETROCK Wall and Ceiling Spray Texture (Aggregated).

2. Texture: As approved. Match adjacent surfaces.

D. Non-Aggregate Finish: Pre-mixed, vinyl texture finish for spray application.

1. Products:

a. CertainTeed Corp.; ProRoc Easi-Tex Spray Texture.

b. National Gypsum Company; Perfect Spray EM Texture.

c. USG Corporation; BEADEX FasTex Wall and Ceiling Spray Texture.

2. Texture: As approved.

PART 3 - EXECUTION

3.01 EXAMINATION:

A. Examine areas and substrates including welded hollow-metal frames, reused framing and existing framing, with Installer present, for compliance with requirements and other conditions affecting performance.

B. Examine panels before installation. Reject panels that are wet, moisture damaged, and mold damaged.

C. Proceed with installation only after unsatisfactory conditions have been corrected.

3.02 APPLYING AND FINISHING PANELS, GENERAL:

A. Comply with ASTM C840.

B. Install ceiling panels across framing to minimize the number of abutting end joints and to avoid abutting end joints in central area of each ceiling. Stagger abutting end joints of adjacent panels not less than one framing member.

C. Install panels with face side out. Butt panels together for a light contact at edges and ends with not more than 1/16 inch (1.5 mm) of open space between panels. Do not force into place.

D. Locate edge and end joints over supports, except in ceiling applications where intermediate supports or gypsum board back-blocking is provided behind end joints. Do not place tapered edges against cut edges or ends. Stagger vertical joints on opposite sides of partitions. Do not make joints other than control joints at corners of framed openings.

E. Form control and expansion joints with space between edges of adjoining gypsum panels.

F. Cover both faces of support framing with gypsum panels in concealed spaces (above ceilings, etc.), except in chases braced internally.

1. Unless concealed application is indicated or required for sound, fire, air, or smoke ratings, coverage may be accomplished with scraps of not less than 8 sq. ft. (0.7 sq. m) in area.

2. Fit gypsum panels around ducts, pipes, and conduits.

3. Where partitions intersect structural members projecting below underside of floor/roof slabs and decks, cut gypsum panels to fit profile formed by structural members; allow 1/4- to 3/8-inch- (6- to 10-mm-) wide joints to install sealant.

G. Isolate perimeter of gypsum board applied to non-load-bearing partitions at structural abutments, except floors. Provide 1/4- to 1/2-inch- (6- to 13-mm-) wide spaces at these

locations and trim edges with edge trim where edges of panels are exposed. Seal joints between edges and abutting structural surfaces with acoustical sealant.

H. Attachment to Steel Framing: Attach panels so leading edge or end of each panel is attached to open (unsupported) edges of stud flanges first.

I. Install sound attenuation blankets before installing gypsum panels unless blankets are readily installed after panels have been installed on one side.

3.03 APPLYING INTERIOR GYPSUM BOARD:

A. Install interior gypsum board in the following locations:

1. Wallboard Type: As indicated on Drawings.

B. Single-Layer Application:

1. On ceilings, apply gypsum panels before wall/partition board application to greatest extent possible and at right angles to framing unless otherwise indicated.

2. On partitions/walls, apply gypsum panels vertically (parallel to framing) or horizontally (perpendicular to framing) unless otherwise indicated or required by fire-resistance-rated assembly, and minimize end joints.

a. Stagger abutting end joints not less than one framing member in alternate courses of panels.

b. At high walls, install panels horizontally unless otherwise indicated or required by fire-resistance-rated assembly.

3. On Z-furring members, apply gypsum panels vertically (parallel to framing) with no end joints. Locate edge joints over furring members.

4. Fastening Methods: Apply gypsum panels to supports with steel drill screws.

3.04 INSTALLING TRIM ACCESSORIES:

A. General: For trim with back flanges intended for fasteners, attach to framing with same fasteners used for panels. Otherwise, attach trim according to manufacturer's written instructions.

B. Control Joints: Install control joints according to ASTM C840.

C. Interior Trim: Install in the following locations:

1. Cornerbead: Use at outside corners unless otherwise indicated.

2. LC-Bead: Use at exposed panel edges .

3.05 FINISHING GYPSUM BOARD:

A. General: Treat gypsum board joints, interior angles, edge trim, control joints, penetrations, fastener heads, surface defects, and elsewhere as required to prepare gypsum board surfaces for decoration. Promptly remove residual joint compound from adjacent surfaces.

B. Prefill open joints, rounded or beveled edges, and damaged surface areas.

C. Apply joint tape over gypsum board joints, except for trim products specifically indicated as not intended to receive tape.

D. Gypsum Board Finish Levels: Finish panels to levels indicated below and according to ASTM C840:

1. Level 1: Ceiling plenum areas, concealed areas, and where indicated.

2. Level 4: At wall or ceiling panel surfaces that will be exposed to view unless otherwise indicated .

3. Level 5: Where indicated on Drawings

3.06 APPLYING TEXTURE FINISHES:

A. Surface Preparation and Primer: Prepare and apply primer to gypsum panels and other surfaces receiving texture finishes. Apply primer to surfaces that are clean, dry, and smooth.

B. Texture Finish Application: Mix and apply finish using powered spray equipment, to produce a uniform texture free of starved spots or other evidence of thin application or of application patterns.

C. Prevent texture finishes from coming into contact with surfaces not indicated to receive texture finish by covering them with masking agents, polyethylene film, or other means. If, despite these precautions, texture finishes contact these surfaces, immediately remove droppings and overspray to prevent damage according to texture-finish manufacturer's written recommendations.

3.07 PROTECTION:

A. Protect adjacent surfaces from drywall compound and promptly remove from floors and other non-drywall surfaces. Repair surfaces stained, marred, or otherwise damaged during drywall application.

B. Protect installed products from damage from weather, condensation, direct sunlight, construction, and other causes during remainder of the construction period.

C. Remove and replace panels that are wet, moisture damaged, and mold damaged.

1. Indications that panels are wet, or moisture damaged include, but are not limited to, discoloration, sagging, or irregular shape.

2. Indications that panels are mold damaged include, but are not limited to, fuzzy or splotchy surface contamination and discoloration.

3.08 CONTRACT CLOSEOUT:

A. Provide in accordance with Section 01 77 00.

END OF SECTION

SECTION 09 51 13

ACOUSTICAL PANEL CEILINGS

PART 1 - GENERAL

1.01 DESCRIPTION:

A. Provide suspended acoustical ceilings, mechanical suspension system and accessories; as indicated and in compliance with Contract Documents.

1.02 REFERENCES:

A. ASTM International (ASTM):

1. A580/A580M: Standard Specification for Stainless Steel Wire.

2. A653/A653M: Standard Specification for Steel Sheet, Zinc-Coated (Galvanized) or Zinc-Iron Alloy-Coated (Galvannealed) by the Hot-Dip Process.

3. C635/C635M: Standard Specification for the Manufacture, Performance, and Testing of Metal Suspension Systems or Acoustical Tile and Lay-in Panel Ceilings

4. C636/C636M: Standard Practice for Installation of Metal Ceiling Suspension Systems for Acoustical Tile and Lay-In Panels

5. C834: Standard Specification for Latex Sealants

6. E84: Standard Test Method for Surface Burning Characteristics of Building Materials

7. E90: Standard Test Method for Laboratory Measurement of Airborne Sound Transmission Loss of Building Partitions and Elements

8. E1190: Standard Test Methods for Strength of Power-Actuated Fasteners Installed in Structural Members

9. E1264: Standard Classification for Acoustical Ceiling Products

10. G21: Standard Practice for Determining Resistance of Synthetic Polymeric Materials to Fungi

1.03 DEFINITIONS:

A. CAC: Ceiling Attenuation Class

B. LR: Light Reflectance

C. NRC: Noise Reduction Coefficient.

1.04 SUBMITTALS:

A. Submit the following shop drawings in accordance with Section 01 33 00

B. Product Data: For each type of product.

C. Samples: For each exposed product and for each color and texture specified, 6 inches (150 mm) in size.

1. Samples for Verification: For each component indicated and for each exposed finish required, prepared on Samples of size indicated below.

a. Acoustical Panel: Set of full-size Samples of each type, color, pattern, and texture.

D. Coordination Drawings: Reflected ceiling plans, drawn to scale, on which the following items are shown and coordinated with each other, using input from installers of the items involved:

1. Suspended ceiling components including manufacturer's acoustical soffit.

2. Structural members to which suspension systems will be attached.

3. Items penetrating finished ceiling including the following:

a. Lighting fixtures.

b. Air outlets and inlets.

E. Maintenance Data: For finishes to include in maintenance manuals.

1. Furnish extra materials that match products installed and that are packaged with protective covering for storage and identified with labels describing contents.

a. Acoustical Ceiling Panels: Full-size panels equal to 10 percent of quantity installed.

b. Hold-Down Clips: Equal to 10 percent of quantity installed in horizontal plane ceiling areas and as required at vertical soffit area.

1.06 QUALITY ASSURANCE:

A. Comply with the requirements specified in Section 01 43 00.

1.07 DELIVERY STORAGE AND HANDLING:

A. Deliver acoustical panels, suspension-system components, and accessories to Project site in original, unopened packages and store them in a fully enclosed, conditioned space where they will be protected against damage from moisture, humidity, temperature extremes, direct sunlight, surface contamination, and other causes.

B. Before installing acoustical panels, permit them to reach room temperature and a stabilized moisture content.

C. Handle acoustical panels carefully to avoid chipping edges or damaging units in any way.

1.08 PROJECT/SITE CONDITIONS:

A. Environmental Limitations: Do not install acoustical panel ceilings until spaces are enclosed and weatherproof, wet work in spaces is complete and dry, work above ceilings is complete, and ambient temperature and humidity conditions are maintained at the levels indicated for Project when occupied for its intended use.

PART 2 - PRODUCTS

2.01 PERFORMANCE REQUIREMENTS:

A. Seismic Performance: Acoustical ceiling shall withstand the effects of earthquake motions determined according to ASCE/SEI 7.

B. Surface-Burning Characteristics: Comply with ASTM E84; testing by a qualified testing agency. Identify products with appropriate markings of applicable testing agency.

1. Flame-Spread Index: Comply with ASTM E1264 for Class A materials.

2. Smoke-Developed Index: 450 or less.

C. Fire-Resistance Ratings: Comply with ASTM E119; testing by a qualified testing agency. Identify products with appropriate markings of applicable testing agency.

1. Indicate design designations from UL's "Fire Resistance Directory" or from the listings of another qualified testing agency.

2.02 ACOUSTICAL PANELS, GENERAL:

A. Source Limitations:

1. Acoustical Ceiling Panel: Obtain each type from single source from single manufacturer.

2. Suspension System: Obtain each type from single source from single manufacturer.

B. Source Limitations: Obtain each type of acoustical ceiling panel and supporting suspension system from single source from single manufacturer.

C. Acoustical Panel Standard: Provide manufacturer's standard panels of configuration indicated that comply with ASTM E1264 classifications as designated by types, patterns, acoustical ratings, and light reflectances unless otherwise indicated.

D. Acoustical Panel Colors and Patterns: Match appearance characteristics indicated for each product type.

1. Where appearance characteristics of acoustical panels are indicated by referencing pattern designations in ASTM E1264 and not manufacturers' proprietary product designations, provide products selected by Engineer from each manufacturer's full range that comply with requirements indicated for type, pattern, color, light reflectance, acoustical performance, edge detail, and size.

2.03 ACOUSTICAL PANELS :

B. Manufacturers:

1. Armstrong World Industries, Inc.

2. CertainTeed Corp.

3. Chicago Metallic Corporation.

4. USG Interiors, Inc.; Subsidiary of USG Corporation.

C. Classification: Provide panels complying with ASTM E1264 for type, form, and pattern as follows:

1. Type and Form: Equal to Armstrong Cirrus Open Plan Mineral Fiber, Item no. 56, fine texture.

2. Pattern: As indicated by manufacturer's designation above.

D. Color: White

E. LR: Not less than 0.85 .

F. NRC: Not less than 0.75 .

G. CAC: Not less than 35 .

H. AC: Not less than 170 .

I. Edge/Joint Detail: Square

J. Thickness 3/4 inch (19 mm) Modular Size: 24 by 24 inches (610 by 610 mm) .

K. Broad Spectrum Antimicrobial Fungicide and Bactericide Treatment: Provide acoustical panels treated with manufacturer's standard antimicrobial formulation that inhibits fungus, mold, mildew, and gram-positive and gram-negative bacteria and showing no mold, mildew, or bacterial growth when tested according to ASTM D3273 and evaluated according to ASTM D3274 or ASTM G21.

2.04 METAL SUSPENSION SYSTEMS, GENERAL:

A. Metal Suspension-System Standard: Provide manufacturer's standard direct-hung metal suspension systems of types, structural classifications, and finishes indicated that comply with applicable requirements in ASTM C635/C635M.

1. High-Humidity Finish: Comply with ASTM C635/C635M requirements for "Coating Classification for Severe Environment Performance" where high-humidity finishes are indicated.

B. Attachment Devices: Size for five times the design load indicated in ASTM C635/C635M, Table 1, "Direct Hung," unless otherwise indicated. Comply with seismic design requirements.

C. Wire Hangers, Braces, and Ties: Provide wires complying with the following requirements:

1. Stainless-Steel Wire: ASTM A580/A580M, Type 304, nonmagnetic.

2. Size: Select wire diameter so its stress at three times hanger design load (ASTM C635/C635M, Table 1, "Direct Hung") will be less than yield stress of wire

D. Seismic Stabilizer Bars: Manufacturer's standard perimeter stabilizers designed to accommodate seismic forces as required.

E. Seismic Struts: Manufacturer's standard compression struts designed to accommodate seismic forces as required.

F. Seismic Clips: Manufacturer's standard seismic clips designed and spaced to secure acoustical panels in place as required.

G. Hold-Down Clips: Where indicated, provide manufacturer's standard hold-down clips spaced 24 inches (610 mm) o.c. on all cross tees.

H. Acoustical Soffit: Manufacturer’s standard acoustical soffit system. See drawings for location and sizes. Include universal hold down clip for ceiling panels and exposed tee grid system members as required.

2.05 METAL SUSPENSION SYSTEM :

A. Manufacturers:

1. Armstrong World Industries, Inc.

2. CertainTeed Corp.

3. Chicago Metallic Corporation.

4. USG Interiors, Inc.; Subsidiary of USG Corporation.

D. Wide-Face, Capped, Double-Web, Hot-Dip Galvanized, G60 (Z180), Steel Suspension System: Main and cross runners roll formed from cold-rolled steel sheet; hot-dip galvanized according to ASTM A653/A653M, G60 (Z180) coating designation; with prefinished, cold-rolled, 15/16-inch- (24-mm-) wide aluminum caps on flanges.

1. Structural Classification: Heavy-duty system.

2. Face Design: Flat, flush.

3. Face Finish: Painted white

2.06 METAL EDGE MOLDINGS AND TRIM :

A. Manufacturers:

1. Armstrong World Industries, Inc.

2. CertainTeed Corp.

3. Chicago Metallic Corporation.

4. Fry Reglet Corporation.

5. USG Interiors, Inc.; Subsidiary of USG Corporation.

B. Roll-Formed, Sheet-Metal Edge Moldings and Trim: Type and profile indicated or, if not indicated, manufacturer's standard moldings for edges and penetrations that comply with seismic design requirements; formed from sheet metal of same material, finish, and color as that used for exposed flanges of suspension-system runners.

1. Provide manufacturer's standard edge moldings that fit acoustical panel edge details and suspension systems indicated and that match width and configuration of exposed runners unless otherwise indicated.

2. For lay-in panels with square edge details.

3. For circular penetrations of ceiling, provide edge moldings fabricated to diameter required to fit penetration exactly.

2.07 ACOUSTICAL SEALANT:

A. Products:

1. Acoustical Sealant for Exposed and Concealed Joints:

a. Pecora Corporation; AC-20 FTR Acoustical and Insulation Sealant.

b. USG Corporation; SHEETROCK Acoustical Sealant.

B. Acoustical Sealant: Manufacturer's standard sealant complying with ASTM C834 and effective in reducing airborne sound transmission through perimeter joints and openings in building construction as demonstrated by testing representative assemblies according to ASTM E90.

1. Exposed and Concealed Joints: Nonsag, paintable, nonstaining latex sealant.

2. Concealed Joints: Nondrying, nonhardening, nonskinning, nonstaining, gunnable, synthetic-rubber sealant.

PART 3 - EXECUTION

3.01 EXAMINATION:

A. Examine substrates, areas, and conditions, including structural framing to which acoustical panel ceilings attach or abut, with Installer present, for compliance with requirements specified in this and other Sections that affect ceiling installation and anchorage and with requirements for installation tolerances and other conditions affecting performance of acoustical panel ceilings.

B. Examine acoustical panels before installation. Reject acoustical panels that are wet, moisture damaged, or mold damaged.

C. Proceed with installation only after unsatisfactory conditions have been corrected.

3.02 PREPARATION:

A. Measure each ceiling area and establish layout of acoustical panels to balance border widths at opposite edges of each ceiling. Avoid using less-than-half-width panels at borders and comply with layout shown on reflected ceiling plans.

3.03 INSTALLATION:

A. General: Install acoustical panel ceilings to comply with ASTM C636/C636M and seismic design requirements indicated, according to manufacturer's written instructions and CISCA's "Ceiling Systems Handbook."

B. Suspend ceiling hangers and soffit hangers from building's structural members and as follows:

1. Install hangers' plumb and free from contact with insulation or other objects within ceiling plenum that are not part of supporting structure or of ceiling suspension system.

2. Splay hangers only where required to miss obstructions; offset resulting horizontal forces by bracing, countersplaying, or other equally effective means.

3. Where width of ducts and other construction within ceiling plenum produces hanger spacings that interfere with location of hangers at spacings required to support standard suspension-system members, install supplemental suspension members and hangers in form of trapezes or equivalent devices.

4. Secure wire hangers to ceiling-suspension members and to supports above with a minimum of three tight turns. Connect hangers directly either to structures or to inserts, eye screws, or other devices that are secure and appropriate for substrate and that will not deteriorate or otherwise fail due to age, corrosion, or elevated temperatures.

5. Secure flat, angle, channel, and rod hangers to structure, including intermediate framing members, by attaching to inserts, eye screws, or other devices that are secure and appropriate for both the structure to which hangers are attached and the type of hanger involved. Install hangers in a manner that will not cause them to deteriorate or fail due to age, corrosion, or elevated temperatures.

6. Do not support ceilings directly from permanent metal forms or floor deck. Fasten hangers to cast-in-place hanger inserts, post installed mechanical or adhesive anchors, or power-actuated fasteners that extend through forms into concrete.

7. When steel framing does not permit installation of hanger wires at spacing required, install carrying channels or other supplemental support for attachment of hanger wires.

8. Do not attach hangers to steel deck tabs.

9. Do not attach hangers to steel roof deck. Attach hangers to structural members.

10. Space hangers not more than 48 inches (1200 mm) o.c. along each member supported directly from hangers unless otherwise indicated; provide hangers not more than 8 inches (200 mm) from ends of each member.

11. Size supplemental suspension members and hangers to support ceiling loads within performance limits established by referenced standards and publications.

C. Secure bracing wires to ceiling suspension members and to supports with a minimum of four tight turns. Suspend bracing from building's structural members as required for hangers, without attaching to permanent metal forms, steel deck, or steel deck tabs. Fasten bracing wires into concrete with cast-in-place or post installed anchors.

D. Install edge moldings and trim of type indicated at perimeter of acoustical ceiling area and where necessary to conceal edges of acoustical panels.

1. Apply acoustical sealant in a continuous ribbon concealed on back of vertical legs of moldings before they are installed.

2. Screw attach moldings to substrate at intervals not more than 16 inches (400 mm) o.c. and not more than 3 inches (75 mm) from ends, leveling with ceiling suspension system to a tolerance of 1/8 inch in 12 feet (3.2 mm in 3.6 m). Miter corners accurately and connect securely.

3. Do not use exposed fasteners, including pop rivets, on moldings and trim.

E. Install suspension-system runners so they are square and securely interlocked with one another. Remove and replace dented, bent, or kinked members.

F. Install acoustical panels with undamaged edges and fit accurately into suspension-system runners and edge moldings. Scribe and cut panels at borders and penetrations to provide a neat, precise fit.

1. For square-edged panels, install panels with edges fully hidden from view by flanges of suspension-system runners and moldings.

2. Paint cut edges of panel remaining exposed after installation; match color of exposed panel surfaces using coating recommended in writing for this purpose by acoustical panel manufacturer.

3. Install hold-down clips in areas indicated, in areas required by authorities having jurisdiction; space as recommended by panel manufacturer's written instructions unless otherwise indicated.

4. Protect lighting fixtures and air ducts to comply with requirements indicated for fire-resistance-rated assembly.

5. Install soffit members per manufacturer’s requirements and ASTM C636. Brace as required for local seismic requirements.

3.04 FIELD QUALITY CONTROL:

A. Special Inspections: Engage a qualified special inspector to perform the following special inspections if required by authorities having jurisdiction.:

1. Compliance of seismic design.

3.05 CLEANING:

A. Clean exposed surfaces of acoustical panel ceilings, including trim, edge mouldings, and suspension-system members. Comply with manufacturer's written instructions for cleaning and touchup of minor finish damage. Remove and replace ceiling components that cannot be successfully cleaned and repaired to permanently eliminate evidence of damage.

3.06 CONTRACT CLOSEOUT:

A. Provide in accordance with Section 01 77 00.

END OF SECTION

SECTION 09 65 19

RESILIENT FLOORING-BASE AND ACCESSORIES

PART 1 - GENERAL

1.01 DESCRIPTION:

A. Provide resilient flooring tiles, base and accessories as indicated and in compliance with Contract Documents.

1. Section Includes:

a. Vinyl composition floor tile.

b. Resilient base.

c. Resilient molding accessories.

1.02 REFERENCES:

A. ASTM International (ASTM):

1. C109/C109M: Standard Test Method for Compressive Strength of Hydraulic Cement Mortars (Using 2-in. or [50-mm] Cube Specimens).

2. E648: Standard Test Method for Critical Radiant Flux of Floor-Covering Systems Using a Radiant Heat Energy Source

3. F510: Standard Test Method for Resistance to Abrasion of Resilient Floor Coverings Using an Abrader with a Grit Feed Method

4. F710: Standard Practice for Preparing Concrete Floors to Receive Resilient Flooring

5. F970: Standard Test Method for Static Load Limit

6. F1066: Standard Specification for Vinyl Composition Floor Tile

7. F1861: Standard Specification for Resilient Wall Base

8. F2170: Standard Test Method for Determining Relative Humidity in Concrete Floor Slabs Using In-Situ Probes

C. National Fire Protection Association (NFPA):

1. 253: Standard Method of Test for Critical Radiant Flux of Floor Covering Systems Using a Radiant Heat Energy Source

1.03 SUBMITTALS:

A. Submit the following shop drawings in accordance with Section 01 33 00.

1. Product Data: For each type of product indicated.

2. Samples for Verification: Full-size units of each color and pattern of floor tile required.

3. Qualification Data: For qualified Installer.

4. Maintenance Data: For each type of floor tile to include in maintenance manuals.

a. For replacement and maintenance purposes, furnish, and deliver to Owner's maintenance department, additional floor covering materials of each size, color, pattern and type from same runs as actually used on job and in quantities as follows:

(1) Flooring material: Not less than 5 percent of total amount used.

(2) Base material: Not less than 1/10 of total linear feet used.

1.05 QUALITY ASSURANCE:

A. Comply with the requirements specified in Section 01 43 00.

B. Installer Qualifications: A qualified installer who employs workers for this Project who are competent in techniques required by manufacturer for floor tile installation indicated.

1. Engage an installer who employs workers for this Project who are trained or certified by manufacturer for installation techniques required.

C. Fire-Test-Response Characteristics: As determined by testing identical products according to ASTM E648 or NFPA 253 by a qualified testing agency.

1. Critical Radiant Flux Classification: Class I, not less than 0.45 W/sq. cm.

1.06 DELIVERY STORAGE AND HANDLING:

A. Comply with the requirements specified in Section 01 66 10.

B. Deliver materials to site in manufacturer's original, unopened containers with labels indicating brand names, colors/patterns, and quality designations legible and intact.

C. Store floor tile and installation materials in dry spaces protected from the weather, with ambient temperatures maintained within range recommended by manufacturer, but not less than 50 degrees F (10 degrees C) or more than 90 degrees F (32 degrees C). Store floor tiles on flat surfaces.

1.07 PROJECT/SITE CONDITIONS:

A. Maintain ambient temperatures within range recommended by manufacturer, but not less than70 degrees F (21 degrees C) or more than 95 degrees F (35 degrees C) , in spaces to receive floor tile during the following time periods:

1. 48 hours before installation.

2. During installation.

3. 48 hours after installation.

B. Until Substantial Completion, maintain ambient temperatures within range recommended by manufacturer, but not less than 55 degrees F (13 degrees C) or more than 95 degrees F (35 degrees C) .

C. Close spaces to traffic during floor tile installation.

D. Close spaces to traffic for 48 hours after floor tile installation.

E. Install resilient products after other finishing operations, including painting, have been completed.

PART 2 - PRODUCTS

2.01 PERFORMANCE REQUIREMENTS:

A. FloorScore Compliance: Resilient tile flooring shall comply with requirements of FloorScore Standard.

2.02 VINYL COMPOSITION FLOOR TILE :

A. Products:

1. Armstrong World Industries, Inc.; Commercial line all colors and patterns (basis of design) .

2. Azrock, Inc.

3. Congoleum Corporation

4. Mannington Mills, IncTarkett, Inc

B. Tile Standard: ASTM F1066,Class 2, through-pattern tile .

C. Wearing Surface: Smooth.

D. Thickness: 0.125 inch (3.2 mm) .

E. Size: 12 by 12 inches (305 by 305 mm).

F. Colors and Patterns: As selected by Engineer from full range of colors.

2.03 RESILIENT BASE :

A. Resilient Base:

1. Manufacturers:

a. Armstrong World Industries, Inc.

b. Burke Mercer Flooring Products; Division of Burke Industries, Inc.

c. Endura Rubber Flooring; Division of Burke Industries, Inc.

d. Johnsonite.

e. VPI, LLC; Floor Products Division.

B. Resilient Base Standard: ASTM F1861.

C. Minimum Thickness: 0.125 inch (3.2 mm) .

D. Height:4 inches (102 mm) .

E. Lengths: Coils in manufacturer's standard length Outside Corners Job formed or preformed.

F. Inside Corners: Job formed or preformed.

G. Finish: As selected by Engineer from manufacturer's full range.

H. Colors and Patterns: As selected by Engineer from full range of industry colors.

2.04 RESILIENT MOLDING ACCESSORY :

A. Resilient Molding Accessory:

1. Manufacturers:

a. Same as tile manufacturer.

B. Description: As required. Material: As required

C. Profile and Dimensions: As required.

D. Colors and Patterns: As selected by Engineer from full range of industry colors.

2.05 INSTALLATION MATERIALS:

A. Trowelable Leveling and Patching Compounds: Latex-modified, portland cement based or blended hydraulic-cement-based formulation provided or approved by manufacturer for applications indicated.

B. Adhesives: Water-resistant type recommended by manufacturer to suit floor tile and substrate conditions indicated.

1. Adhesives shall comply with the following limits for VOC content when calculated according to 40 CFR 59, Subpart D (EPA Method 24):

a. VCT Tile Adhesives: Not more than 50 g/L.

b. Base and Accessories: Not more than 50 g/L.

C. Floor Polish: Provide protective liquid floor polish products as recommended by manufacturer.

D. Metal Edge Strips: Extruded aluminum with mill finish of width shown, of height required to protect exposed edges of tiles, and in maximum available lengths to minimize running joints.

PART 3 - EXECUTION

3.01 EXAMINATION:

A. Examine substrates, with Installer present, for compliance with requirements for maximum moisture content and other conditions affecting performance of the Work.

B. Verify that finishes of substrates comply with tolerances and other requirements specified in other Sections and that substrates are free of cracks, ridges, depressions, scale, and foreign deposits that might interfere with adhesion of floor tile.

C. Proceed with installation only after unsatisfactory conditions have been corrected.

3.02 PREPARATION:

A. Prepare substrates according to manufacturer's written instructions to ensure adhesion of resilient products.

B. Concrete Substrates: Prepare according to ASTM F710.

1. Verify that substrates are dry and free of curing compounds, sealers, and hardeners.

2. Remove substrate coatings and other substances that are incompatible with adhesives and that contain soap, wax, oil, or silicone, using mechanical methods recommended by manufacturer. Do not use solvents.

3. Alkalinity and Adhesion Testing: Perform tests recommended by manufacturer. Proceed with installation only after substrates pass testing.

4. Moisture Testing: Perform tests recommended by manufacturer and as follows. Proceed with installation only after substrates pass testing.

   a. Perform anhydrous calcium chloride test, ASTM F1869. Proceed with installation only after substrates have maximum moisture-vapor-emission rate of 3 lb of water/1000 sq. ft. (1.36 kg of water/92.9 sq. m) in 24 hours.

   b. Perform relative humidity test using in situ probes, ASTM F2170. Proceed with installation only after substrates have a maximum 75 percent relative humidity level measurement.

C. Fill cracks, holes, and depressions in substrates with trowelable leveling and patching compound and remove bumps and ridges to produce a uniform and smooth substrate.

D. Do not install floor tiles until they are same temperature as space where they are to be installed.

1. Move resilient products and installation materials into spaces where they will be installed at least 48 hours in advance of installation.

E. Sweep and vacuum clean substrates to be covered by resilient products immediately before installation.

3.03 FLOOR TILE INSTALLATION:

A. Comply with manufacturer's written instructions for installing floor tile.

B. Lay out floor tiles from center marks established with principal walls, discounting minor offsets, so tiles at opposite edges of room are of equal width. Adjust as necessary to avoid using cut widths that equal less than one-half tile at perimeter.

1. Lay tiles square with room axis

C. Match floor tiles for color and pattern by selecting tiles from cartons in the same sequence as manufactured and packaged, if so numbered. Discard broken, cracked, chipped, or deformed tiles.

D. Scribe, cut, and fit floor tiles to butt neatly and tightly to vertical surfaces and permanent fixtures including built-in furniture, cabinets, pipes, outlets, and door frames.

E. Extend floor tiles into toe spaces, door reveals, closets, and similar openings. Extend floor tiles to center of door openings.

F. Maintain reference markers, holes, and openings that are in place or marked for future cutting by repeating on floor tiles as marked on substrates. Use chalk or other nonpermanent, nonstaining marking device.

G. Install floor tiles on covers for telephone and electrical ducts, building expansion-joint covers, and similar items in finished floor areas. Maintain overall continuity of color and pattern between pieces of tile installed on covers and adjoining tiles. Tightly adhere tile edges to substrates that abut covers and to cover perimeters.

H. Adhere floor tiles to flooring substrates using a full spread of adhesive applied to substrate to produce a completed installation without open cracks, voids, raising and puckering at joints, telegraphing of adhesive spreader marks, and other surface imperfections.

3.04 RESILIENT BASE INSTALLATION:

A. Comply with manufacturer's written instructions for installing resilient base.

B. Apply resilient base to walls, columns, pilasters, casework and cabinets in toe spaces, and other permanent fixtures in rooms and areas where base is required.

C. Install resilient base in lengths as long as practicable without gaps at seams and with tops of adjacent pieces aligned.

D. Tightly adhere resilient base to substrate throughout length of each piece, with base in continuous contact with horizontal and vertical substrates.

E. Do not stretch resilient base during installation.

F. On masonry surfaces or other similar irregular substrates, fill voids along top edge of resilient base with manufacturer's recommended adhesive filler material.

G. Preformed Corners: Install preformed corners before installing straight pieces.

H. Job-Formed Corners:

1. Outside Corners: Use straight pieces of maximum lengths possible. Form without producing discoloration (whitening) at bends.

2. Inside Corners: Use straight pieces of maximum lengths possible.

3.05 RESILIENT ACCESSORY INSTALLATION:

A. Comply with manufacturer's written instructions for installing resilient accessories.

B. Resilient Molding Accessories: Butt to adjacent materials and tightly adhere to substrates throughout length of each piece. Install reducer strips at edges of resilient floor covering that would otherwise be exposed.

SECTION 09 90 00

PROCESS PAINTING AND COATING

PART 1 - GENERAL

1.01 DESCRIPTION

This section includes materials and application of painting and coating systems for the following surfaces:

A. Exposed metal.

B. Metal having thermally sprayed zinc or aluminum coatings.

C. Concrete and masonry.

D. Metal in contact with concrete.

1.02 SUBMITTALS

A. Submit shop drawings in accordance with Section 01 33 00.

B. Submit manufacturer’s data sheets showing the following information:

1. Percent solids by volume.

2. Minimum and maximum recommended dry-film thickness per coat for prime, intermediate, and finish coats.

3. Recommended surface preparation.

4. Recommended thinners.

5. Statement verifying that the specified prime coat is recommended by the manufacturer for use with the specified intermediate and finish coats.

6. Application instructions including recommended equipment and temperature limitations.

7. Curing requirements and instructions.

C. Submit color swatches.

D. Submit certificate and supplier’s data sheets identifying the type and gradation of abrasives used for surface preparation. The certificate or data sheets shall specifically identify that the abrasives comply with federal and state of New Mexico regulations for materials to be used for abrasive blasting for surface preparation for paints and coatings.

E. Submit material safety data sheets for each coating.

PART 2 - MATERIALS

2.01 PAINTING AND COATING SYSTEMS

The following table lists the coating requirements for the project related piping systems:

PIPE COATING REQUIREMENTS

Material/Service/Location	**System/Reference**
Ductile Iron / Sludge / Corrosive environment	13
Ductile Iron / Sludge / Exposed to the atmosphere	15
Submerged Concrete, Sludge	33

The following index lists the various painting and coating systems by service and type:

PAINT COATINGS SYSTEM INDEX

No.	**Title**	**Coating**
Exposed Metal Coating Systems		
13.	Exposed Metal, Corrosive environment	Epoxy
15.	Exposed Metal, Atmospheric weathering	Alkyd
Concrete and Masonry Coating Systems		
33.	Submerged Concrete, Sludge	Coal tar epoxy

These systems are specified in detail in the following paragraphs. For each coating, the required surface preparation, prime coat, intermediate coat (if required), topcoat, and coating thicknesses are described. Mil thicknesses shown are minimum dry-film thicknesses.

2.02 EXPOSED METAL COATING SYSTEMS

A. System No. 13--Exposed Metal, Corrosive Environment – Sludge feed pipe:

Type: High-build epoxy prime coat with a pigmented high-build aliphatic or acrylic polyurethane finish coat.

Service Conditions: For use with metal structures or pipes subjected to water condensation; chemical fumes, such as hydrogen sulfide; salt spray; and chemical contact.

Surface Preparation: SSPC SP-10.

Prime Coat: Two-component high-build epoxy. Apply to a dry-film thickness of 8 mils. Products: Tnemec 104, Sherwin-Williams Macropoxy 646 B58-600, or equal.

Finish Coat: Two-component pigmented high-build polyurethane. Apply one or more coats to a total dry-film thickness of 5 mils. Products: Tnemec Series 1075U Endura-Shield, Sherwin-Williams Hi-Solids Polyurethane B65-300 series, or equal.

B. System No. 15--Exposed Metal, Atmospheric Weathering or Water Condensation Environment – Exterior ductile iron pipe:

Type: Gloss alkyd enamel having a minimum volume solids content of 46% with alkyd primer.

Service Conditions: For use on exterior ductile iron piping subject to sunlight, weathering, humidity, or water condensation.

Surface Preparation: SSPC SP-6.

Prime Coat: Tnemec Primer Series V10, Sherwin-Williams Kem-Bond HS B50NZ series, or equal, applied to minimum dry-film thickness of two mils.

Finish Coat: Two coats of Tnemec Series 2H, two coats of Sherwin-Williams Industrial Enamel B54 series, or equal. Apply to a minimum dry-film thickness of 1.5 mils per coat.

2.03 CONCRETE AND MASONRY COATING SYSTEMS

A. System No. 33--Submerged Concrete, Sludge: Belt press supporting pillars

Type: Coal Tar Epoxy

Service Conditions: Concrete submerged in raw sewage, sludge or structures containing moist hydrogen sulfide such as manholes and sewage pumping station wet wells.

Surface Preparation: In accordance with Part 3, subsection on “Preparation of Concrete and Masonry Surfaces to Be Coated.”

Finish Coats: Apply three coats of Sherwin-Williams TarGuard B69 Series or Tnemec Series 46H-413 Hi-Build Tneme-Tar, or equal, to a minimum total thickness of 20 mils. Thickness of an individual coat shall not exceed 7 mils.

2.04 ABRASIVES FOR SURFACE PREPARATION

A. Abrasives used for preparation of ferrous (excluding stainless steel) surfaces shall be one of the following:

1. 16 to 30 or 16 to 40 mesh silica sand or mineral grit.

2. 20 to 40 mesh garnet.

3. Crushed iron slag, 100% retained on No. 80 mesh.

4. SAE Grade G-40 or G-50 iron or steel grit.

B. Abrasives used for preparation of concrete and masonry surfaces shall be 16 to 30 or 16 to 40 mesh silica sand.

C. In the above gradations, 100% of the material shall pass through the first stated sieve size and 100% shall be retained on the second stated sieve size.

PART 3 - EXECUTION

3.01 WEATHER CONDITIONS

A. Do not paint in the rain, wind, snow, mist, and fog or when steel or metal surface temperatures are less than 5°F above the dew point.

B. Do not apply paint when the relative humidity is above 85%. For Systems Nos. 3 and 14, the relative humidity shall not exceed 95%.

C. Do not paint when temperature of metal to be painted is above 120°F.

D. Do not apply alkyd, inorganic zinc, silicone aluminum, or silicone acrylic paints if air or surface temperature is below 40°F or expected to be below 40°F within 24 hours. For Systems Nos. 3 and 14, the temperature shall not be below 25°F.

E. Do not apply epoxy, acrylic latex, and polyurethane paints on an exterior or interior surface if air or surface temperature is below 60°F or expected to drop below 60°F in 24 hours.

3.02 SURFACE PREPARATION PROCEDURES

A. Remove oil and grease from metal surfaces in accordance with SSPC SP-1. Use clean cloths and cleaning solvents and wipe dry with clean cloths. Do not leave a film or greasy residue on the cleaned surfaces before abrasive blasting.

B. Remove weld spatter and weld slag from metal surfaces and grind smoothly rough welds, beads, peaked corners, and sharp edges including erection lugs in accordance with SSPC SP-2 and SSPC SP-3. Grind 0.020 inch (minimum) off the weld caps on pipe weld seams. Grind outside sharp corners, such as the outside edges of flanges, to a minimum radius of 1/4 inch.

C. Do not abrasive blast or prepare more surface area in one day than can be coated in one day; prepare surfaces and apply coatings the same day. Remove sharp edges, burrs, and weld spatter.

D. Do not abrasive blast epoxy- or enamel-coated pipe that has already been factory coated, except to repair scratched or damaged coatings.

E. For carbon steel, do not touch the surface between the time of abrasive blasting and the time the coating is applied. Apply coatings within two hours of blasting or before any rust bloom forms.

F. Surface preparation shall conform with the SSPC specifications as follows:

Solvent Cleaning	SP-1
Hand Tool Cleaning	SP-2
Power Tool Cleaning	SP-3
White Metal Blast Cleaning	SP-5
Commercial Blast Cleaning	SP-6
Brush-Off Blast Cleaning	SP-7
Pickling	SP-8
Near-White Blast Cleaning	SP-10
Power Tool Cleaning to Bare Metal	SP-11
Surface Preparation and Cleaning of Steel and Other Hard Materials by High- and Ultrahigh-Pressure Water Jetting Prior to Recoating	SP-12
Surface Preparation of Concrete	SP-13

G. Wherever the words “solvent cleaning,” “hand tool cleaning,” “wire brushing,” or “blast cleaning” or similar words are used in these specifications or in paint manufacturer’s specifications, they shall be understood to refer to the applicable SSPC (Society for Protective Coatings), surface preparation specifications listed above.

H. Dust blasting is defined as cleaning the surface through the use of very fine abrasives, such as siliceous or mineral abrasives, 80 to 100 mesh. Apply a fine etch to the metal surface to clean the surface of any contamination or oxide and to provide a surface profile for the coating.

I. Brush-off blasting of concrete and masonry surfaces is defined as opening subsurface holes and voids and etching the surface for a coating to bond.

J. For carbon steel surfaces, after abrasive blast cleaning, the height of the surface profile shall be 2 to 3 mils. Verify the surface profile by measuring with an impresser tape acceptable to the Owner’s Representative. Perform a minimum of one test per 100 square feet of surface area. Testing shall be witnessed by the Owner’s Representative. The impresser tape used in the test shall be permanently marked with the date, time, and locations where the test was made. Test results shall be promptly presented to the Owner’s Representative.

K. Do not apply any part of a coating system before the Owner’s Representative has reviewed the surface preparation. If coating has been applied without this review, if directed by the Owner’s Representative, remove the applied coating by abrasive blasting and reapply the coat in accordance with this specification.

3.03 ABRASIVE BLAST CLEANING

A. Use dry abrasive blast cleaning for metal surfaces. Do not use abrasives in automatic equipment that have become contaminated. When shop or field blast cleaning with handheld nozzles, do not recycle or reuse blast particles.

B. After abrasive blast cleaning and prior to application of coating, dry clean surfaces to be coated by dusting, sweeping, and vacuuming to remove residue from blasting. Apply the specified primer or touch-up coating within the period of an eight-hour working day. Do not apply coating over damp or moist surfaces. Reclean prior to application of primer or touch-up coating any blast cleaned surface not coated within said eight-hour period.

C. Keep the area of the work in a clean condition and do not permit blasting particles to accumulate and constitute a nuisance or hazard.

D. During abrasive blast cleaning, prevent damage to adjacent coatings. Schedule blast cleaning and coating such that dust, dirt, blast particles, old coatings, rust, mill scale, etc., will not damage or fall upon wet or newly coated surfaces.

3.04 PREPARATION OF CONCRETE AND MASONRY SURFACES TO BE COATED

A. Surface preparation of concrete and masonry surfaces shall be in accordance with SSPC SP-13 and the following.

B. Do not apply coating until concrete has cured at least 30 days. Do not use curing compound on surfaces that are to be coated.

C. Concrete and masonry surfaces on which coatings are to be applied shall be of even color, gray or gray-white. The surface shall have no pits, pockets, holes, or sharp changes of surface elevation. Scrubbing with a stiff-bristle fiber brush shall produce no dusting or dislodging of cement or sand. Sprinkling water on the surface shall produce no water beads or standing droplets. Concrete and masonry shall be free of laitance and slick surfaces.

D. Detergent clean the concrete or masonry surface with trisodium phosphate per ASTM D4258. Then sandblast surfaces (brush-off blast). Floor slabs may be acid etched per ASTM D4260 in lieu of sandblasting. After sandblasting, wash surfaces with water to remove dust and salts, per ASTM D4258 or D4261. The grain of the concrete surface to touch shall not be rougher than that of No. 10 mesh sand.

E. Prior to coating concrete, plaster, and masonry with System No. 31, 33, 34, or 36, determine the presence of capillary moisture per ASTM D4263, except as modified below. Tape a 4-foot by 4-foot sheet of polyethylene plastic to the concrete surface to be coated. Allow the plastic sheet to remain in place at least 24 hours. After the specified time has elapsed, remove the plastic sheet and visually examine both the underside of the plastic sheet and the concrete surface beneath it. There shall be no indication of moisture on either surface. If moisture is indicated, allow additional curing time for the concrete and then retest. Provide one test sheet for every 500 square feet of concrete surface to be coated. For walls, provide one test sheet for each 10 feet (or fraction thereof) of vertical rise in all elevations starting within 12 inches of the floor or base slab.

F. Acceptance criteria for concrete surfaces shall be in accordance with SSPC SP-13, Table 1, “Severe Service.”

G. Do not apply coatings to concrete when the concrete is outgassing. Apply coatings only when the concrete surface temperature is stable, not rising.

3.05 PROCEDURES FOR ITEMS HAVING SHOP-APPLIED PRIME COATS

A. After application of primer to surfaces, allow coating to cure for a minimum of two hours before handling to minimize damage.

B. When loading for shipment to the project site, use spacers and other protective devices to separate items to prevent damaging the shop-primed surfaces during transit and unloading. If wood spacers are used, remove wood splinters and particles from the shop-primed surfaces after separation. Use padded chains or ribbon binders to secure the loaded items and minimize damage to the shop-primed surfaces.

C. Cover shop-primed items 100% with protective coverings or tarpaulins to prevent deposition of road salts, fuel residue, and other contaminants in transit.

D. Handle shop-primed items with care during unloading, installation, and erection operations to minimize damage. Do not place or store shop-primed items on the ground or on top of other work unless ground or work is covered with a protective covering or tarpaulin. Place shop-primed items above the ground upon platforms, skids, or other supports.

3.06 FIELD TOUCH-UP OF SHOP-APPLIED PRIME COATS

A. Remove oil and grease surface contaminants on metal surfaces in accordance with SSPC SP-1. Use clean rags wetted with a degreasing solution, rinse with clean water, and wipe dry.

B. Remove dust, dirt, salts, moisture, chalking primers, or other surface contaminants that will affect the adhesion or durability of the coating system. Use a high-pressure water blaster or scrub surfaces with a broom or brush wetted with a solution of trisodium phosphate, detergent, and water. Before applying intermediate or finish coats to inorganic zinc primers, remove any soluble zinc salts that have formed by means of scrubbing with a stiff bristle brush. Rinse scrubbed surfaces with clean water.

C. Remove loose or peeling primer and other surface contaminants not easily removed by the previous cleaning methods in accordance with SSPC SP-7. Take care that remaining primers are not damaged by the blast cleaning operation. Remaining primers shall be firmly bonded to the steel surfaces with blast cleaned edges feathered.

D. Remove rust, scaling, or primer damaged by welding or during shipment, storage, and erection in accordance with SSPC SP-10. Take care that remaining primers are not damaged by the blast cleaning operation. Areas smaller than 1 square inch may be prepared per SSPC SP-11. Remaining primers shall be firmly bonded to the steel surfaces with cleaned edges feathered.

E. Use repair procedures on damaged primer that protects adjacent primer. Blast cleaning may require the use of lower air pressure, smaller nozzles, and abrasive particle sizes, short blast nozzle distance from surface, shielding, and/or masking.

F. After abrasive blast cleaning of damaged and defective areas, remove dust, blast particles, and other debris by dusting, sweeping, and vacuuming; then apply the specified touch-up coating.

G. Surfaces that are shop primed with inorganic zinc primers shall receive a field touch-up of organic zinc primer per System No. 18 to cover scratches or abraded areas.

H. Other surfaces that are shop primed shall receive a field touch-up of the same primer used in the original prime coat.

3.07 PAINTING SYSTEMS

A. All materials of a specified painting system, including primer, intermediate, and finish coats, shall be produced by the same manufacturer. Thinners, cleaners, driers, and other additives shall be as recommended by the paint manufacturer for the particular coating system.

B. Deliver paints to the jobsite in the original, unopened containers.

3.08 PAINT STORAGE AND MIXING

A. Store and mix materials only in areas designated for that purpose by the Owner's Representative. The area shall be well-ventilated, with precautionary measures taken to prevent fire hazards. Post "No Smoking" signs. Storage and mixing areas shall be clean and free of rags, waste, and scrapings. Tightly close containers after each use. Store paint at an ambient temperature from 50°F to 100°F.

B. Prepare multiple-component coatings using all of the contents of the container for each component as packaged by the paint manufacturer. Do not use partial batches. Do not use multiple-component coatings that have been mixed beyond their pot life. Provide small quantity kits for touch-up painting and for painting other small areas. Mix only the components specified and furnished by the paint manufacturer. Do not intermix additional components for reasons of color or otherwise, even within the same generic type of coating.

3.09 PROCEDURES FOR THE APPLICATION OF COATINGS

A. Conform to the requirements of SSPC PA-1. Follow the recommendations of the coating manufacturer including the selection of spray equipment, brushes, rollers, cleaners, thinners, mixing, drying time, temperature and humidity of application, and safety precautions.

B. Stir, strain, and keep coating materials at a uniform consistency during application. Power mix components. For multiple component materials, premix each component before combining. Apply each coating evenly, free of brush marks, sags, runs, and other evidence of poor workmanship. Use a different shade or tint on succeeding coating applications to indicate coverage where possible. Finished surfaces shall be free from defects or blemishes.

C. Do not use thinners unless recommended by the coating manufacturer. If thinning is allowed, do not exceed the maximum allowable amount of thinner per gallon of coating material. Stir coating materials at all times when adding thinner. Do not flood the coating material surface

with thinner prior to mixing. Do not reduce coating materials more than is absolutely necessary to obtain the proper application characteristics and to obtain the specified dry-film thicknesses.

D. Remove dust, blast particles, and other debris from blast cleaned surfaces by dusting, sweeping, and vacuuming. Allow ventilator fans to clean airborne dust to provide good visibility of working area prior to coating applications. Remove dust from coated surfaces by dusting, sweeping, and vacuuming prior to applying succeeding coats.

E. Apply coating systems to the specified minimum dry-film thicknesses as determined per SSPC PA-2.

F. Apply primer immediately after blast cleaning and before any surface rusting occurs, or any dust, dirt, or any foreign matter has accumulated. Reclean surfaces by blast cleaning that have surface colored or become moist prior to coating application.

G. Apply a brush coat of primer on welds, sharp edges, nuts, bolts, and irregular surfaces prior to the application of the primer and finish coat. Apply the brush coat prior to and in conjunction with the spray coat application. Apply the spray coat over the brush coat.

H. Before applying subsequent coats, allow the primer and intermediate coats to dry for the minimum curing time recommended by the manufacturer. In no case shall the time between coats exceed the manufacturer's recommendation.

I. Each coat shall cover the surface of the preceding coat completely, and there shall be a visually perceptible difference in applied shade or tint of colors.

J. Applied coating systems shall be cured at 75°F or higher for 48 hours. If temperature is lower than 75°F, curing time shall be in accordance with printed recommendations of the manufacturer, unless otherwise allowed by the Owner's Representative.

K. Assembled parts shall be disassembled sufficiently before painting or coating to ensure complete coverage by the required coating.

3.10 SURFACES NOT TO BE COATED

Do not paint the following surfaces unless otherwise noted in the drawings or in other specification sections. Protect during the painting of adjacent areas:

A. Concrete walkways.

B. Mortar-coated pipe and fittings.

C. Stainless steel.

D. Metal letters.

E. Glass.

F. Roofings.

G. Fencing.

H. Electrical fixtures except for factory coatings.

I. Nameplates.

J. Grease fittings.

K. Brass and copper, submerged.

L. Buried pipe, unless specifically required in the piping specifications.

M. Fiberglass items, unless specifically required in the FRP specifications.

N. Aluminum handrail, stairs, and grating.

3.11 PROTECTION OF SURFACES NOT TO BE PAINTED

Remove, mask, or otherwise protect hardware, lighting fixtures, switch plates, aluminum surfaces, machined surfaces, couplings, shafts, bearings, nameplates on machinery, and other surfaces not intended to be painted. Provide drop cloths to prevent paint materials from falling on or marring adjacent surfaces. Protect working parts of mechanical and electrical equipment from damage during surface preparation and painting process. Mask openings in motors to prevent paint and other materials from entering the motors.

3.12 SURFACES TO BE COATED

Coat surfaces with the specific coating systems as described below:

A. Coatings for mechanical equipment, such as pumps, shall adhere to the various mechanical equipment specifications and shall be finish coated in the field with the applicable coating system specified herein for the connecting piping. Color of finish coat shall match the color of the connecting piping.

B. Coatings for aboveground and exposed piping or piping in galleries shall adhere to the piping specifications and shall be finish coated in the field with the applicable coating system specified herein. Color of finish coat shall match the color of the connecting piping.

C. Coat insulated steel piping per System No. 9.

D. Coat submerged ductile iron piping per System No. 3.

E. Coat valves the same as the adjacent piping, color to match.

F. Coat concrete surfaces where shown in the drawings. Apply System No. 31 on exposed interior concrete surfaces, and System No. 33 on submerged concrete surfaces and as indicated in the drawings.

G. Coat buried flanges, nuts and bolts, and valve boxes per System No. XX.

H. Contractor is responsible for coating all project related surfaces as indicated and specified. In the event that any part of the improvements are not specified for coating the Contractor is responsible for coordinating with the Owner and Engineer to determine the required coating system and procedure.

3.13 DRY-FILM THICKNESS TESTING

A. Measure coating thickness specified for carbon steel surfaces with a magnetic-type dry-film thickness gauge in accordance with SSPC PA-2. Provide certification that the gauge has been calibrated by a certified laboratory within the past six months. Provide dry-film thickness gauge as manufactured by Mikrotest or Elcometer.

B. Test the finish coat of metal surfaces (except zinc primer and galvanizing) for holidays and discontinuities with an electrical holiday detector, low-voltage, wet-sponge type. Provide measuring equipment. Provide certification that the gauge has been calibrated by a certified laboratory within the past six months. Provide detector as manufactured by Tinker and Rasor or K-D Bird Dog.

C. Measure coating thickness specified for concrete or masonry surfaces in accordance with ASTM D4138. Test the finish coat of concrete and masonry surfaces in accordance with NACE SP0188-2006 or ASTM D4787. Patch coatings at the points of thickness measurement or holiday detection.

D. Check each coat for the correct dry-film thickness. Do not measure within eight hours after application of the coating.

E. For metal surfaces, make five separate spot measurements (average of three readings) spaced evenly over each 100 square feet of area (or fraction thereof) to be measured. Make three readings for each spot measurement of either the substrate or the paint. Move the probe or detector a distance of 1 to 3 inches for each new gauge reading. Discard any unusually high or low reading that cannot be repeated consistently. Take the average (mean) of the three readings as the spot measurement. The average of five spot measurements for each such 100-square-foot area shall not be less than the specified thickness. No single spot measurement in any 100-square-foot area shall be less than 80%, nor more than 120%, of the specified thickness. One of three readings which are averaged to produce each spot measurement may underrun by a greater amount as defined by SSPC PA-2.

F. For concrete surfaces, make five separate spot measurements spaced evenly over each 100 square feet of area (or fraction thereof) to be measured. The average of five spot measurements for each such 100-square-foot area shall not be less than the specified thickness. No single spot measurement in any 100-square-foot area shall be less than 80%, nor more than 120%, of the specified thickness.

G. Perform tests in the presence of the Owner’s Representative.

3.14 REPAIR OF IMPROPERLY COATED SURFACES

If the item has an improper finish color or insufficient film thickness, clean and topcoat the surface with the specified paint material to obtain the specified color and coverage. Sandblast or power-sand visible areas of chipped, peeled, or abraded paint, feathering the edges. Then prime and finish coat in accordance with the specifications. Work shall be free of runs, bridges, shiners, laps, or other imperfections.

3.15 CLEANING

A. During the progress of the work, remove discarded materials, rubbish, cans, and rags at the end of each day's work.

B. Thoroughly clean brushes and other application equipment at the end of each period of use and when changing to another paint or color.

C. Upon completion of painting work, remove masking tape, tarps, and other protective materials, using care not to damage finished surfaces.

END OF SECTION

3.06 CLEANING AND PROTECTION:

A. Comply with manufacturer's written instructions for cleaning and protection of floor tile.

B. Perform the following operations immediately after completing floor tile installation:

1. Remove adhesive and other blemishes from exposed surfaces.

2. Sweep and vacuum surfaces thoroughly.

3. Damp-mop surfaces to remove marks and soil.

C. Protect floor tile products from mars, marks, indentations, and other damage from construction operations and placement of equipment and fixtures during remainder of construction period.

D. Floor Polish: Remove soil, visible adhesive, and surface blemishes from floor tile surfaces before applying liquid floor polish.

1. Apply one coat(s).

E. Cover floor tile until Substantial Completion.

3.07 CONTRACT CLOSEOUT:

A. Provide in accordance with Section 01 77 00.

END OF SECTION

SECTION 09 90 10

BUILDING PAINTING AND COATING

PART 1 GENERAL

1.1 SUMMARY

Section includes general information, products, and execution for painting and coating.

A. Related Sections: (Not Used)

1.2 REFERENCES

A. American National Standards Institute (ANSI):

1. ANSI/EIA 359-A-85 – Colors for Color Identification and Coding

B. ASTM International (ASTM):

1. D 523 – Standard Test Method for Specular Gloss
2. D 4258 – Standard Practice for Surface Cleaning Concrete for Coating
3. D 6386 – Standard Practice for Preparation of Zinc (Hot-Dip Galvanized) Coated Iron and Steel Product and Hardware Surfaces for Painting

C. California Air Resources Board (CARB):

1. 2007 – Suggested Control Measure for Architectural Coatings

D. California Department of Public Health (CDPH):

1. Standard Method v1.1 – Standard Method for the Testing & Evaluation of VOC Emissions

E. Environmental Protection Agency (EPA):

1. 40 CFR 261 – Identification and Listing of Hazardous Waste
2. AP-42 – Compilation of Air Pollutant Emission Factors - Volume I: Stationary Point and Area Sources, Chapter 13.2.6

   – Abrasive Blasting

F. Master Painter Institute LLC (MPI)

G. National Association of Corrosion Engineers (NACE):

1. SP0188 – Discontinuity (Holiday) Testing of New Protective Coatings on Conductive Substrates
2. SP0287 – Field Measurement of Surface Profile of Abrasive Blast-Cleaned Steel Surfaces Using a Replica Tape

H. Occupational Safety and Health Administration (OSHA):

1. 29 CFR 1910 – Occupational Safety and Health Standards

2. 29 CFR 1926 – Safety and Health Regulations for Construction

I. The Society for Protective Coatings (SSPC):

1. PA 2 – Procedure for Determining Conformance to Dry Coating Thickness Requirements
2. PA 10 – Guide to Safety and Health Requirements for Industrial Painting Projects
3. QP 1 – Standard Procedure for Evaluating Qualifications of Industrial/Marine Painting Contractors
4. SP 1 – Solvent Cleaning
5. SP 2 – Hand Tool Cleaning
6. SP 3 – Power Tool Cleaning
7. SP 8 – Pickling
8. SP 11 – Power-Tool Cleaning to Bare Metal
9. SP 16 – Brush-Off Blast Cleaning of Coated and Uncoated Galvanized Steel, Stainless Steels, and Non-Ferrous Metals

J. The Society for Protective Coatings/National Association of Corrosion Engineers (SSPC/NACE):

1. SP 6/NACE No. 3 – Commercial Blast Cleaning
2. SP 7/NACE No. 4 – Brush-Off Blast Cleaning
3. SP 10/NACE No. 2 – Near-White Blast Cleaning
4. SP 13/NACE No. 6 – Surface Preparation of Concrete
5. SP WJ-1/NACE WJ-1 – Waterjet Cleaning of Metals-Clean to Bare Substrate

K. South Coast Air Quality Management District (SCAQMD):

1. Rule 1113 – Architectural Coatings

1.3 DEFINITIONS

A. Coverage: Total minimum dry film thickness (DFT) in mils or sf/gallon.

B. Paint: The term paint, as used herein, means coating systems materials including primers, sealers, fillers, emulsions, enamels, epoxy, lacquers, and other applied materials, whether used in prime coats, intermediate coats, or finish coats.

C. Gloss Levels: Paint gloss levels specified herein are based on the following ranges: 1.

Description	Gloss Range	ASTM D 523 Test Method
Flat	0 to 15	85

Eggshell	5 to 20	60□
Satin	15 - 35	60
Semi-Gloss	30 to 65	60
Gloss	Over 65	60

1.4 SEQUENCING AND SCHEDULING

A. Finishes as selected.

B. Work Not Included:

1. Surfaces in concealed or inaccessible areas such as furred spaces, foundation spaces, pipe or duct chases, shafts, or utility tunnels.
2. Surfaces of anodized or prefinished aluminum, stainless steel, bronze, brass, and chromium plate.
3. Moving parts of operating equipment, mechanical or electrical moving parts, linkages, sensing devices, and motor shafts.
4. Buried concrete surfaces.
5. Non-metallic materials such as glass and porcelain.
6. Prefinished electrical items such as motors, motor control centers, switchboards, switchgear, panelboards, transformers, and disconnect switches.
7. Prefinished architectural items such as acoustical tile, cabinets, building louvers, overhead coiling doors, sectional doors, and wall panels.

1.5 SUBMITTALS

A. Product Data:

1. Product and safety data and other information for proposed products.
2. A copy of the Manufacturer’s coating application quality assurance manual.

B. Submit the product application procedure, current product data sheet (PDS), safety data sheet (SDS), and a copy of the quality assurance/quality control (QA/QC) report for surface preparation and coating application. Include complete surface preparation and cleaning procedures, as well as application equipment. Include anchor profiles, DFT, adhesion tests, temperature, humidity, holiday tests, and any other measurements taken for quality assurance and quality control during surface preparation and application.

C. Submit the final field-testing report to the ENGINEER within 2 weeks of the substantial completion date.

D. Samples:

1. Initial selection: Complete fan deck, color card, or actual color chips illustrating the full range of color availability.

2. Samples: 2 12-inches by 12-inches, illustrating colors, glosses, and textures for each surface finishing product scheduled.

E. Quality Control Submittals:

1. Contract closeout submittals: Warranty.

F. Provide the ENGINEER with a schedule of systems and locations requiring color selection.

G. Warranty Documentation:

1. Sample warranty.

2. Warranty.

H. Supplements listed in this Section.

1.6 QUALITY ASSURANCE

A. Installer Qualifications:

1. A minimum of 5 years of documented experience in the Work of this Section.

2. Approved by the Manufacturer.

B. Provide finish coats compatible with substrate materials or with prime coats specified in other sections.

C. First quality preparation, painting, and finishing is required. Dirt, grit, or dust in the paint or finish; runs, sags, or drips of paint or finish; or irregularity of finish is cause for rejection. Remove rejected finishes; repair, re-prime, and refinish as required to achieve a first quality finish.

D. Regulatory Requirements:

1. Meet federal, state, and local requirements limiting the emission of volatile organic compounds (VOCs).

2. Perform surface preparation and painting in accordance with the recommendations of the following:

a. The Paint Manufacturer’s instructions, Product Data Sheets (PDS).

b. Federal, state, and local agencies having jurisdiction.

E. MPI Standards:

1. Products: In accordance with MPI standards indicated and listed in "MPI Approved Products List."

2. Preparation and workmanship: In accordance with requirements in "MPI Architectural Painting Specification Manual" for products and paint systems indicated.

3.

F. Mockup:

1. Size: As required by the ENGINEER.

2. Before proceeding with Work under this Section, finish one complete space or item of each paint system and color required to show the quality of workmanship, materials, finish, texture, colors, and special details in compliance with the requirements of this Section. Provide one mockup for finishing process related spaces and items and one mockup for finishing architectural finished spaces and items.

3. Once approved, sample spaces and items shall serve as a standard for similar Work throughout the site.

1.7 SITE CONDITIONS

A. Do not apply paint in temperatures or moisture conditions outside of the Manufacturer's recommended maximum or minimum allowable.

B. Work and storage areas shall be free of dust during the application of paint finishes. Do not apply finishes in spaces with accumulated rubbish, dust, or dirt or where construction activity is present.

C. Do not perform final abrasive blast cleaning whenever the relative humidity exceeds 85%, or whenever the surface temperature is less than 5°F above the dew point of ambient air.

D. Primed surfaces shall be top coated within 2 months or as required by the Paint Manufacturer.

E. Provide a lighting level of 80 foot-candles measured mid-height at the substrate surface.

PART 2 PRODUCTS

2.1 APPROVED MANUFACTURERS

A. High Performance Coatings:

1. AkzoNobel/Devoe

2. Ameron Protective Coatings

3. DuPont Chemical Company

4. Hempel Inc.

5. Pittsburgh Paints

6. Sherwin Williams

7. Tnemec Coatings

8. Valspar Corporation

B. Paints:

1. AkzoNobel

2. Ameritone

3. Benjamin Moore Paints
4. PPG Architectural Finishes, Inc.
5. Pratt and Lambert, Inc.
6. Rustoleum Corporation
7. Samuel Cabot, Inc.
8. Sherwin Williams

C. Testing Equipment:

1. Magnetic type DFT gauge:
   a. ElektroPhysic, MikroTest
2. Low-voltage wet sponge electrical holiday detector:
   a. Tinker and Rasor

2.2 MATERIALS

A. Sustainable Design Product Requirements: (Not Used)

B. General:

1. Coatings: Ready-mixed, furnished through one Manufacturer, except field-catalyzed coatings, of good flow and brushing properties, capable of drying or curing free of streaks or sags; provide field-applied primers or undercoats produced by the same Manufacturer as the finish coat(s).
2. Thinners, cleaners, driers, and other additives: As recommended by the Paint Manufacturer.
3. Application equipment: Equipment as recommended by the Paint Manufacturer.

C. Maximum VOC Content; Interior Paints, Coatings, and Accessories:

1. Primers: 150 g/L.
2. Flat paints and coatings: 50 g/L.
3. Non-flat paints and coatings: 150 g/L.
4. Anti-corrosive and anti-rust coatings: 250 g/L.
5. Other sealers: 200 g/L.

D. Products:

Product	**Definition**
Acrylic Latex	100% acrylic, water reducible corrosion-resistant coating for light to moderate use exposures, finish as

	specified
Acrylic Sealer	Clear acrylic
Alkyd Enamel	Optimum quality, medium long oil, finish as specified
Bituminous Paint	Single-component, coal-tar pitch based
Epoxy, Filler/Surfacer	100% solids epoxy trowel Grade filler and surfacer, non- shrinking, suitable for application to concrete. Approved for potable water contact and in accordance with NSF/ANSI 61, where required
Epoxy, High Build	Polyamide epoxy, minimum 69% volume solids, capability of 4 to 8 MDFTPC
Epoxy, High Solids	Polyamide epoxy, 80% volume solids, minimum, suitable for immersion service
Epoxy, Non-skid (Aggregated)	Polyamide or amine converted epoxies aggregated; aggregate may be packaged separately
Epoxy, NSF	Polyamide epoxy, approved for potable water contact and in accordance with NSF/ANSI 61
Epoxy, Primer – Ferrous Metal	Polyamide, anti-corrosive, converted epoxy primer containing rust-inhibitive pigments
Epoxy, Primer – Other	Epoxy primer, high build, as recommended by the Paint Manufacturer for specific galvanized metal, copper, or non-ferrous metal alloy to be coated
Epoxy, Water Base	2-component, polyamide epoxy emulsion, finish as required
Fusion-Bonded Coating	100% solids, thermosetting, fusion-bonded, dry powder epoxy or polyurethane resin, suitable for the intended service
Fusion-Bonded, TFE Lube or Grease Lube	TFE, liquid coating or open gear grease
Latex Primer Sealer	Waterborne vinyl acrylic primer/sealer for interior gypsum board and plaster. Capable of providing uniform seal and suitable for use with specified finish coats
Polyurethane, Elastomeric	100% solids, plural component, spray-applied, high build, elastomeric polyurethane coating, suitable for the intended service

Polyurethane, Enamel	2-component, aliphatic or acrylic based polyurethane; high-gloss finish
Rust-Inhibitive Primer	Single package steel primers with anti-corrosive pigment loading
Sanding Sealer	Co-polymer oil, clear, dull luster
Silicone/Silicone Acrylic	Elevated temperature silicone or silicone/acrylic based
Stain, Concrete	Acrylic, water repellent, penetrating stain
Wash Primer	Vinyl butyral acid
Zinc-Rich Primer, Organic	Converted epoxy, epoxy/phenolic or urethane type, minimum 10 pounds metallic zinc content per gallon

E. Maintenance:

1. Extra materials: One gallon of each color and sheen.

2.3 FINISHES

A. Shop Coating Requirements:

1. Equipment shall be primed, and finish coated in the shop by the Manufacturer and touched up in the field with identical material after installation.

2. Where the Manufacturer's standard coating is not suitable for the intended service condition, the ENGINEER may approve the use of a tie-coat to be used between the Manufacturer's standard coating and the specified field finish. In such cases, tie-coat shall be surface tolerant epoxy as recommended by the Field Finish Coat Manufacturer. Coordinate the details of the Equipment Manufacturer's standard coating with the Paint Manufacturer.

2.4 MIXES

A. Multiple-Component Coatings:

1. Prepare using each component as packaged by the Paint Manufacturer.

2. No partial batches are permitted.

3. Do not use multiple-component coatings mixed beyond their pot life.

4. Furnish small quantity kits for touchup painting and for painting other small areas. Mix only components specified and furnished by the Paint Manufacturer.

5. Do not intermix additional components for reasons of color or otherwise, even within the same generic type of coating.

B. Colors: Formulate paints with colorants free of lead and lead compounds.

PART 3 EXECUTION

3.1 PREPARATION

A. General: Inspect and provide substrate surfaces prepared in accordance with the Contract Documents and the most stringent recommendations of the Paint Manufacturer whose product is to be applied. The more stringent requirements shall apply. If any surface is found to be unsuitable to produce a proper finish, do not apply material until the surfaces are made satisfactory. Application of paint to any surface shall be deemed to be acceptance of that surface and full responsibility shall be borne by the CONTRACTOR.

B. Shop Abrasive Blasting:

1. Notify the ENGINEER at least 7 days prior to the start of shop-blast cleaning to allow for inspection of the Work during surface preparation and shop application of paints.

2. Structural steel and similar items, as approved by the ENGINEER, may be shop prepared and primed. Centrifugal wheel blast cleaning is an acceptable alternative to shop-blast cleaning.

C. Field Abrasive Blasting: Perform blasting for items and equipment where specified and as required to restore damaged surfaces previously shop-blasted or field-blasted and primed or coated.

D. Metal Surface Preparation:

1. Where shown on the Drawings, in accordance with the SSPC Specification.

2. The words solvent cleaning, hand tool cleaning, wire brushing, and blast cleaning, or similar words of equal intent in the contract documents or in the Paint Manufacturer’s Specification, refer to the applicable SSPC Specification.

3. Where OSHA 29 CFR 1910, OSHA 29 CFR 1926, EPA 40 CFR 261, EPA AP-42, or SSPC PA 10 regulations preclude standard abrasive blast cleaning, wet or vacu-blast methods may be required. The Paint Manufacturer’s recommendations for wet-blast additives and first coat application shall apply.

4. Hand tool clean areas that cannot be cleaned by power tool cleaning.

5. Round or chamfer sharp edges and grind smooth burrs, jagged edges, and surface defects.

6. Welds and adjacent areas:

a. Prepare such that there is the following:

1) No undercutting or reverse ridges on weld bead.

2) No weld spatter on or adjacent to weld or any area to be painted.

3) No sharp peaks or ridges along weld bead.

b. Grind embedded pieces of electrode or wire flush with the adjacent surface of weld bead.

7. Pre-blast cleaning requirements:

    a. Remove oil, grease, welding fluxes, and other surface contaminants prior to blast cleaning.

    b. Cleaning methods: Steam, open flame, hot water, or cold water with appropriate detergent additives followed with clean water rinsing. Water jetting in accordance with SSPC/NACE SP WJ-1/NACE WJ-1.

    c. Clean small isolated areas as above or solvent clean with suitable solvent and a clean cloth.

8. Blast cleaning requirements:

    a. Type of equipment and speed of travel: Design to obtain a specified degree of cleanliness; minimum surface preparation is as specified herein and takes precedence over the Paint Manufacturer's recommendations.

    b. Select the type and size of abrasive to produce a surface profile that meets the Paint Manufacturer's recommendations for the particular primer to be used.

    c. Use only dry blast cleaning methods.

    d. Do not reuse abrasive, except for designed recyclable systems.

    e. Meet applicable federal, state, and local air pollution and environmental control regulations for blast cleaning, confined space entry (if required), and disposition of spent aggregate and debris.

9. Post-blast cleaning and other cleaning requirements:

    a. Clean surfaces of dust and residual particles from cleaning operations by dry air blast cleaning (no oil or water vapor) or other method prior to painting. Vacuum clean enclosed areas and other areas where dust settling is a problem and wipe with a tack cloth.

    b. Paint surfaces the same day they are blasted. Re-blast surfaces that have begun to rust prior to painting.

E. Non-Ferrous Metal Preparation for Coating: The non-ferrous surface shall be coated within 2 days if it is stored in an environmentally controlled space to avoid coating over the zinc oxide and zinc hydroxide layer that forms. After 2 days, the surface shall be sweep blasted and the coating applied within one hour of the blasting. The blasting shall be performed in accordance with ASTM D 6386 and SSPC SP 16, including:

1. Reduced blast pressure, 40 psi or less.

2. Reduced blasting dwell time.

3. Increased distance of blast nozzle from the surface, 18-inches to 24-inches.

4. Reduced blast angle, 30 degrees to 60 degrees rather than 90 degrees.

5. A softer blast media: Aluminum/magnesium silicate, corncobs, walnut shells, corundum, limestone, or mineral sands with a Mohr's hardness level 5 or less.

6. No resurfacing with sanders or grinders.

7. If the item is stored outside after galvanizing, the surface preparation shall be performed as weathering has begun.

8. A minimum surface profile of 0.75-mil on the bare metal surface is required.

9. Intact coatings are required to be roughened to the degree specified for the coating to be used.

F. Provide the ENGINEER a minimum of 7 days advance notice to the start of field surface preparation Work and coating application Work.

G. Schedule an inspection of cleaned surfaces and all coats prior to successive coat in advance with the ENGINEER.

H. Factory-Finished Items:

1. Schedule an inspection with the ENGINEER before repairing damage to factory-finished items delivered to the site.

2. Repair abraded or otherwise damaged areas on factory-finished items as recommended by the Paint Manufacturer. Carefully blend repaired areas into the original finish. If required to match colors, provide a full finish coat in the field.

I. Measure the moisture content of surfaces using an electronic moisture meter. Do not apply paint unless the moisture content of surfaces is below the following maximums:

1. Concrete floors: 8%.

2. Masonry: As recommended by paint manufacturer.

3. Gypsum board: 12%.

J. Colors:

1. 1. Color as selected by Engineer.

2. Proprietary identification of colors is for identification only; the Selected Manufacturer may supply matches.

3. Equipment colors:

a. Equipment includes the machinery or vessel itself and the structural supports and fasteners and attached electrical conduits.

b. Paint equipment and piping one color as selected.

c. Paint non-submerged portions of equipment the same color as the piping it serves, except as itemized below:

1) Dangerous parts of equipment and machinery: OSHA orange.

2) Fire protection equipment and apparatus: OSHA red.

3) Radiation hazards: OSHA purple.

4) Physical hazards in normal operating area and energy lockout devices including, but not limited to, electrical disconnects for equipment and equipment isolation valves in air and liquid lines under pressure: OSHA

yellow.

3.2 ERECTION / INSTALLATION / APPLICATION

A. General:

1. Paint new interior and exterior metal surfaces, except as specified otherwise. Do not paint exterior concrete surfaces unless specified otherwise.

2. Apply paint in accordance with the contract documents and the Paint Manufacturer's recommendations. The more stringent requirements shall apply. Allow sufficient time between coats to ensure thorough drying or curing of previously applied paint.

3. Vacuum clean surfaces free of loose particles. Use tack cloth just prior to applying the next coat.

4. Coat units or surfaces to be bolted together or joined closely to structures or to one another prior to assembly or installation.

5. Follow the Manufacturer's recommended storage procedures. Do not store coatings in direct sunlight.

6. Where more than one coat is applied within a given system, alternate colors to provide a visual reference showing the required number of coats have been applied.

B. Workmanship:

1. If surfaces are not in proper shape for coating application, repair, rebuild, or refinish before proceeding with the Work. Assume responsibility for inadequate Work caused by improper surface preparation. The application of the first coat does not relieve the responsibility for the base. Do not apply any coats on damp or wet surfaces and in no case until the preceding coat has cured. Avoid contamination or damage to prepared or intercoat surfaces. Clean and re-repair as required.

2. Application: Spread materials evenly without runs or sags and thoroughly brush out. Provide a finish that is free of abrasions, dirt, or other debris and uniform in color and appearance.

   a. The number of coats specified is the minimum to be applied. Apply additional coats when undercoats, or other conditions show through the final finish coat until the paint film is of uniform finish, color, and appearance.

3. Roller application: Use a fine nap roller to roll and bankroll so a nearly flat or orange-peel texture is achieved. Do not use a roller application on metal or wood surfaces. Coating application shall be uniform in color, texture, and shade. Aesthetic defects shall be cause for rejection.

4. Spray application: Apply with airless or air pressure spray equipment as recommended by the Paint Manufacturer for the particular product. Apply each coat in a uniform manner to provide the equivalent thickness of brush coats. Do not double back to build up the film thickness of 2 coats in one pass.

5. Brush application: Brush paint with equipment and the technique required to achieve a flat and smooth surface without brush marks. Brush out and Work paint onto the surfaces in a uniform, even film. Cloudiness, spotting, holidays, laps, brush marks, runs, sags, and other surface imperfections are not acceptable.

6. Replace electrical plates, hardware, light fixture trim, and fittings removed prior to finishing only after finishing has completely dried and hardened. Use workmen skilled in the installation of the items removed; install in a manner that does not void warranties.

C. Shop-Primed and Factory-Finished Surfaces:

1. Schedule an inspection with the ENGINEER before shop priming or top coating factory-finished items are delivered to the site.

2. Prepare surfaces and spot prime using the specified primer.

3. Apply a mist coat of primer, 1-mil DFT.

4. After welding, prepare and prime holdback areas as required for the paint system. Apply primer in accordance with the Manufacturer's instructions.

D. Manufacturer-Applied Paint Systems:

1. Repair abraded areas on factory-finished items as recommended by the Manufacturer.

2. Carefully blend repaired areas into the original finish.

3. Fusion-bonded coatings: Provide appropriate liquid repair kits for field use.

E. Galvanized Metal, Copper, and Non-Ferrous Metal Alloys:

1. Concealed galvanized, copper, and non-ferrous metal alloy surfaces behind building panels or walls do not require painting.

2. Paint galvanized metal, copper and non-ferrous metal alloy surfaces where noted or scheduled only.

3. Prepare the surface and apply primer in accordance with the System No. 10 requirements.

4. Apply intermediate and finish coats of the coating system appropriate for the exposure.

F. Porous Surfaces, such as Concrete:

1. Filler/surfacer: Use the Paint Manufacturer’s recommended product to fill air holes, bug holes, and other surface voids or defects.

2. Prime coat: May be thinned to provide maximum penetration and adhesion.

   a. Type and amount of thinning: Determined by the Paint Manufacturer and dependent on surface density and type of coating.

3. Surface specified to receive water base coating: Damp but free of running water, just prior to the application of coating.

G. Gypsum Board Surface Preparation:

1. Allow joint treatment to thoroughly dry. Lightly sand joint treatments and topping compounds to produce a uniform, smooth surface. Wipe or brush free of sanding dust.

2. Fill minor defects with filler compound. Spot prime defects after repair.

H. Film Thickness and Coverage:

1. Number of coats:

a. The minimum required without regard to coating thickness.

b. Additional coats may be required to obtain the minimum required paint thickness depending on method of application, differences in the Manufacturer's products, and atmospheric conditions.

2. Application thickness:

a. Do not exceed the Manufacturer's recommendations.

b. Measure using a wet film thickness gauge to ensure proper coating thickness during application.

3. Visually inspect concrete non-ferrous metal, plastic, and wood surfaces to ensure proper and complete coverage has been attained.

4. Give particular attention to edges, angles, flanges, and other similar areas where insufficient film thicknesses are likely to be present and ensure proper DFT in these areas.

5. Apply additional coats as required to achieve complete hiding of underlying coats. Hiding shall be so complete that additional coats would not increase the hiding.

I. Factory-Applied Priming:

1. Priming or priming and finishing of certain surfaces may be specified to be factory-applied or shop-applied by fabricators.

2. Carefully examine the contract documents for priming or finishing Work installed by other trades to avoid duplications or omissions.

3.3 Pipe Identification: As specified in piping specifications. PROTECTION

A. Remove, mask, or otherwise protect hardware, lighting fixtures, switch plates, aluminum surfaces, machined surfaces, couplings, shafts, bearings, nameplates on machinery, and other surfaces not specified elsewhere to be painted.

B. Provide drop cloths to prevent paint materials from falling on or marring adjacent surfaces.

C. Protect working parts of mechanical and electrical equipment from damage during surface preparation and the painting process.

D. Mask openings in motors to prevent paint and other materials from entering.

E. Protect surfaces from overspray that are adjacent to or downwind of the Work area.

3.4 QUALITY CONTROL

A. Testing:

1. Surface preparation testing:

a. Measure prepared surface profile using magnetic type gauge or replica tape in

accordance with NACE SP0287.

b. Verify surface is free of debris and particulate prior to coating application using clear tape.

2. Thickness testing:

a. Measure coating thickness specified in mils with magnetic type, DFT gauge, in accordance with SSPC PA 2.

b. Check each coat for correct DFT.

c. Wait a minimum of 1 day after the application of coating before testing.

3. Continuity testing:

a. Holiday detect coatings 20-mils thick or less, except zinc primer and galvanizing, with low-voltage wet sponge electrical holiday detector in accordance with NACE SP0188.

b. After repaired and recoated areas have dried sufficiently, retest each repaired area.

c. Final tests may also be conducted by the ENGINEER.

B. Inspection: Leave staging and lighting in place until the ENGINEER has inspected the surface or coating. Replace staging removed prior to approval by the ENGINEER. Provide additional staging and lighting as requested by the ENGINEER.

C. Unsatisfactory Application:

1. If an item has an improper finish color or insufficient film thickness, clean the surface and topcoat with specified paint material to obtain the specified color and coverage. Obtain specific surface preparation information from the Paint Manufacturer.

2. Evidence of runs, bridges, shiners, laps, or other imperfections is cause for rejection.

3. Repair defects in accordance with the written recommendations of the Paint Manufacturer.

D. Damaged Coatings, Pinholes, and Holidays:

1. Feather edges and repair in accordance with the recommendations of the Paint Manufacturer.

2. Hand or power sand visible areas of chipped, peeled, or abraded paint, and feather the edges. Follow with primer and finish coat. Depending on the extent of repair and appearance, a finish sanding and topcoat may be required.

3. Apply finish coats, including touch up and damage-repair coats, in a manner that will present a uniform texture and color-matched appearance.

E. Manufacturer’s Services:

1. The Paint Manufacturer’s Representative shall be present at the site:

a.

b. As required to resolve field problems attributable to or associated with the

Manufacturer's product.

3.5 CLEANING

A. Brush-off Blast Cleaning:

1. The equipment, procedure, and degree of cleaning in accordance with SSPC/NACE SP 7/NACE No. 4 or SSPC SP 16.

2. Abrasive: Wet or dry blasting sand, grit, or nutshell.

3. Select various surface preparation parameters, such as size and hardness of abrasive, nozzle size, air pressure, and nozzle distance from surface such that the surface is cleaned without pitting, chipping, or other damage.

4. Verify parameter selection by blast cleaning a trial area that will not be exposed to view.

5. The ENGINEER will approve the trial blast cleaned area and, if acceptable, use the area as a representative sample of surface preparation.

6. Repair or replace surface damaged by blast cleaning.

B. Acid Etching:

1. After pre-cleaning, spread the following solution by brush or plastic sprinkling can: One-part commercial muriatic acid reduced by 2 parts water by volume. Adding acid to water in these proportions gives an approximate 10% solution of HCl.

2. Application:

a. Rate: 2 gallons/100 sf.

b. Work acid solution into the surface by hard-bristled brushes or brooms until complete wetting and coverage is obtained.

c. Acid will react vigorously for a few minutes during which time brushing shall be continued.

d. After bubbling subsides, in approximately 10 minutes, hose down the remaining slurry with high-pressure clean water.

e. Rinse immediately to avoid the formation of salts on the surface that are difficult to remove.

f. Thoroughly rinse to remove any residual acid surface condition that may impair adhesion.

3. Ensure surface is completely dry before the application of paint.

4. Apply acid etching to obtain a grit sandpaper surface profile. If the surface is not achieved, repeat the treatment.

C. Solvent Cleaning:

1. In accordance with SSPC SP 1.

2. Consists of the removal of foreign matter such as oil, grease, soil, drawing and cutting

compounds, and any other surface contaminants by using solvents, emulsions, cleaning compounds, steam cleaning, or similar materials and methods that involve a solvent or cleaning action.

D. Power Tool Cleaning: In accordance with SSPC SP 11.

E. Place cloths and waste that might constitute a fire hazard in closed metal containers or destroy at the end of each day.

F. Upon the Substantial Completion date, remove staging, scaffolding, and containers from the site or destroy in a legal manner.

G. Remove paint spots, oil, or stains upon adjacent surfaces and floors and leave the entire job clean.

3.6 PAINTING AND COATING SCHEDULE

A. Paint surfaces in accordance with the following application schedule. In the event of discrepancies or omissions in the following, request clarification from the ENGINEER before starting the Work.

B. Stripe coat edges and corners for any surface subject to a highly corrosive or submerged environment.

C. System No. 4, Interior and Exterior Exposed Metal – Corrosive and Humid: Structures including, but not limited to, steel framing, platforms, equipment supports and other areas where metal is exposed to high humidity and the possibility of dripping moisture and splash or immersion service. Also includes areas in contact with fumes from corrosive gasses.

Surface Preparation	Paint Material	Minimum Coats, Cover
SSPC SP 10/NACE No. 2	Epoxy, Primer – Ferrous Metal	1 coat, 2.5 MDFT
	Epoxy, High Build	1 coat, 4 MDFT

D. System No. 5, Interior and Exterior Exposed Metal – Mildly Corrosive: Structures including, but not limited to, above ground buildings, predominantly dry interiors, office spaces and other surfaces that will be subjected to minimal or no dripping. Relative humidity exceeding 85% during normal operation or presence of corrosive gasses are considered a highly corrosive environment.

Surface Preparation	Paint Material	Minimum Coats, Cover
SSPC SP 10/NACE No. 2	Epoxy, Primer – Ferrous Metal	1 coat, 2.5 MDFT
	Polyurethane, Enamel	2 coats, 3 MDFT

E. System No. 10, Galvanized Metal, Copper, and Non-ferrous Metal Alloy Conditioning:

Surface Preparation	Paint Material	Minimum Coats, Cover
Solvent Clean (SP 1) Followed by Hand Tool (SP 2) or Power Tool (SP 3) or Brush-Off Blast (SP 16)	Wash Primer or The Paint Manufacturer's Recommendation	1 coat, 0.4 MDFT

F. System No. 11, Galvanized Metal Repair:

Surface Preparation	Paint Material	Minimum Coats, Cover
Solvent Clean (SP 1) Followed by Hand Tool (SP 2), Power Tool (SP 3), or Brush-off Blast (SP 7/NACE No. 4)	Zinc-Rich Primer, Organic	1 coat, 3 MDFT

G. System No. 27, Aluminum and Dissimilar Metal Insulation:

Surface Preparation	Paint Material	Minimum Coats, Cover
Solvent Clean (SP 1)	Prime in accordance with the Manufacturer's recommendations	
	Bituminous Paint	1 coat, 10 MDFT

H. System No. 101, Exterior Metal Surfaces, including Hollow Metal Doors and Frames, Rolling Door Angle Jambs, Miscellaneous Steel Lintels, Ferrous Steel Beams and Columns:

Surface Preparation	Water-Based Light Industrial Coating System MPI EXT 5.1C	
	Prime Coat:	Primer, rust-inhibitive, alkyd MPI #79.

SSPC/NACE SP 6/NACE No. 3	Intermediate Coat:	Light industrial coating, exterior, water based, matching topcoat.
	Topcoat:	Light industrial coating, exterior, water based, acrylic semi-gloss (MPI Gloss Level 5), MPI #163.

I. System No. 104, Interior Gypsum Board and Plaster (Eggshell):

Surface Preparation	Latex over Latex Sealer System MPI INT 9.2A (Eggshell):	
In accordance with Gypsum Board or Plaster Surface Preparation	Prime Coat:	Primer sealer, latex, interior, MPI #50.
	Intermediate Coat:	Latex, interior, matching topcoat.
	Topcoat:	Latex, interior (MPI Gloss Level 3), MPI #52.

END OF SECTION

SECTION 22 05 23

GENERAL-DUTY VALVES FOR PLUMBING PIPING

PART 1 - GENERAL

1.1 SUMMARY

A. Section Includes:
   1. Bronze ball valves.
   2. Bronze swing check valves.
   3. Bronze gate valves.

B. Related Sections:
   1. Section 221116 "Domestic Water Piping" for valves applicable only to this piping.
   2. Section 221319 "Sanitary Waste Piping Specialties" for valves applicable only to this piping.

1.2 ACTION SUBMITTALS

A. Product Data: For each type of valve indicated.

1.3 QUALITY ASSURANCE

A. ASME Compliance: ASME B16.10 and ASME B16.34 for ferrous valve dimensions and design criteria.

B. NSF Compliance: NSF 61 for valve materials for potable-water service.

PART 2 - PRODUCTS

2.1 GENERAL REQUIREMENTS FOR VALVES

A. Refer to valve schedule articles for applications of valves.

B. Valve Pressure and Temperature Ratings: Not less than indicated and as required for system pressures and temperatures.

C. Valve Sizes: Same as upstream piping unless otherwise indicated.

D. Valves in Insulated Piping: With 2-inch (50-mm) stem extensions and the following features:

1. Gate Valves: With rising stem.
2. Ball Valves: With extended operating handle of non-thermal-conductive material, and protective sleeve that allows operation of valve without breaking the vapor seal or disturbing insulation.

E. Valve-End Connections:
1. Solder Joint: With sockets according to ASME B16.18.
2. Threaded: With threads according to ASME B1.20.1.

2.2 BRONZE BALL VALVES

A. One-Piece, Reduced-Port, Bronze Ball Valves with Bronze Trim:

1. Manufacturers: Subject to compliance with requirements, provide products by one of the following:

a. American Valve, Inc.
b. Conbraco Industries, Inc.; Apollo Valves.
c. NIBCO INC.

2. Description:

a. Standard: MSS SP-110.
b. CWP Rating: 400 psig (2760 kPa).
c. Body Design: One piece.
d. Body Material: Bronze.
e. Ends: Threaded.
f. Seats: PTFE or TFE.
g. Stem: Bronze.
h. Ball: Chrome-plated brass.
i. Port: Reduced.

2.3 BRONZE SWING CHECK VALVES

A. Class 125, Bronze Swing Check Valves with Bronze Disc:

1. Manufacturers: Subject to compliance with requirements, provide products by one of the following:

a. American Valve, Inc.
b. Milwaukee Valve Company.
c. NIBCO INC.

2. Description:

a. Standard: MSS SP-80, Type 3.
b. CWP Rating: 200 psig (1380 kPa).
c. Body Design: Horizontal flow.
d. Body Material: ASTM B 62, bronze.
e. Ends: Threaded.
f. Disc: Bronze.

B. Class 125, Bronze Swing Check Valves with Nonmetallic Disc:

1. Manufacturers: Subject to compliance with requirements, provide products by one of the following:
a. Crane Co.; Crane Valve Group; Stockham Division.
b. Milwaukee Valve Company.
c. NIBCO INC.

2. Description:

a. Standard: MSS SP-80, Type 4.
b. CWP Rating: 200 psig (1380 kPa).
c. Body Design: Horizontal flow.
d. Body Material: ASTM B 62, bronze.
e. Ends: Threaded.
f. Disc: PTFE or TFE.

2.4 BRONZE GATE VALVES

A. Class 125, NRS Bronze Gate Valves:

1. Manufacturers: Subject to compliance with requirements, provide products by one of the following:

a. American Valve, Inc.
b. Milwaukee Valve Company.
c. NIBCO INC.

2. Description:

a. Standard: MSS SP-80, Type 1.
b. CWP Rating: 200 psig (1380 kPa).
c. Body Material: ASTM B 62, bronze with integral seat and screw-in bonnet.
d. Ends: Threaded or solder joint.
e. Stem: Bronze.
f. Disc: Solid wedge; bronze.
g. Packing: Asbestos free.

B. Class 125, OS&Y, Iron Gate Valves:

1. Manufacturers: Subject to compliance with requirements, provide products by one of the following:

a. Crane Co.; Crane Valve Group; Crane Valves.
b. Milwaukee Valve Company.
c. NIBCO INC.

2. Description:

a. Standard: MSS SP-70, Type I.
b. CWP Rating: 200 psig (1380 kPa).
c. Body Material: ASTM A 126, gray iron with bolted bonnet.
d. Ends: Flanged.
e. Trim: Bronze.
f. Disc: Solid wedge.
g. Packing and Gasket: Asbestos free.

PART 3 - EXECUTION

3.1 VALVE INSTALLATION

A. Install valves with unions or flanges at each piece of equipment arranged to allow service, maintenance, and equipment removal without system shutdown.

B. Locate valves for easy access and provide separate support where necessary.

C. Install valves in horizontal piping with stem at or above center of pipe.

D. Install valves in position to allow full stem movement.

1. Install swing check valves for proper direction of flow and in horizontal position with hinge pin level.

3.2 ADJUSTING

A. Adjust or replace valve packing after piping systems have been tested and put into service but before final adjusting and balancing. Replace valves if persistent leaking occurs.

3.3 GENERAL REQUIREMENTS FOR VALVE APPLICATIONS

A. If valve applications are not indicated, use the following:

1. Shutoff Service: Ball, or gate valves.
2. Pump-Discharge Check Valves:

    a. NPS 2 (DN 50) and Smaller: Bronze swing check valves with bronze or nonmetallic disc.

B. If valves with specified SWP classes or CWP ratings are not available, the same types of valves with higher SWP class or CWP ratings may be substituted.

C. Select valves, except wafer types, with the following end connections:

1. For Copper Tubing, NPS 2 (DN 50) and Smaller: Threaded ends except where solder-joint valve-end option is indicated in valve schedules below.
2. For Copper Tubing, NPS 2-1/2 to NPS 4 (DN 65 to DN 100): Flanged ends except where threaded valve-end option is indicated in valve schedules below.
3. For Steel Piping, NPS 2 (DN 50) and Smaller: Threaded ends.
4. For Steel Piping, NPS 2-1/2 to NPS 4 (DN 65 to DN 100): Flanged ends except where threaded valve-end option is indicated in valve schedules below.

3.4 DOMESTIC, HOT- AND COLD-WATER VALVE SCHEDULE

A. Pipe NPS 2 (DN 50) and Smaller:

1. Bronze Valves: May be provided with solder-joint ends instead of threaded ends.
2. Bronze Angle Valves: Class 125, nonmetallic disc.
3. Ball Valves: One piece, full port, bronze with bronze trim.
4. Bronze Swing Check Valves: Class 125, nonmetallic disc.
5. Bronze Gate Valves: Class 125, NRS.

B. Pipe NPS 2-1/2 (DN 65) and Larger:

1. Iron Valves, NPS 2-1/2 to NPS 4 (DN 65 to NPS 100): May be provided with threaded ends instead of flanged ends.
2. Iron Swing Check Valves: Class 125, nonmetallic-to-metal seats.
3. Iron Gate Valves: Class 125, OS&Y.

END OF SECTION 220523

SECTION 22 05 29

HANGERS AND SUPPORTS FOR PLUMBING PIPING AND EQUIPMENT

PART 1 GENERAL

1.01 SUMMARY

A. This Section includes the following:

1. Steel pipe hangers and supports.
2. Trapeze pipe hangers.
3. Metal framing systems.
4. Thermal-hanger shield inserts.
5. Fastener systems.
6. Equipment supports.

1.02 DEFINITIONS

A. Terminology: As defined in MSS SP-90, "Guidelines on Terminology for Pipe Hangers and Supports."

1.03 PERFORMANCE REQUIREMENTS

A. Design supports for multiple pipes capable of supporting combined weight of supported systems, system contents, and test water.

B. Design equipment supports capable of supporting combined operating weight of supported equipment and connected systems and components.

1.04 SUBMITTALS

A. Product Data: For the following:

1. Steel pipe hangers and supports.
2. Thermal-hanger shield inserts.
3. Powder-actuated fastener systems.

B. Shop Drawings: Show fabrication and installation details and include calculations for the following:

1. Trapeze pipe hangers. Include Product Data for components.

2. Metal framing systems. Include Product Data for components.
3. Equipment supports.

C. Welding certificates.

1.05 QUALITY ASSURANCE

A. Welding: Qualify procedures and personnel according to ASME Boiler and Pressure Vessel Code: Section IX.

PART 2 PRODUCTS

2.01 MANUFACTURERS

A. In other Part 2 articles where titles below introduce lists, the following requirements apply to product selection:

1. Available Manufacturers: Subject to compliance with requirements, manufacturers offering products that may be incorporated into the Work include, but are not limited to, manufacturers specified.
2. Manufacturers: Subject to compliance with requirements, provide products by one of the manufacturers specified.

2.02 STEEL PIPE HANGERS AND SUPPORTS

A. Description: MSS SP-58, Types 1 through 58, factory-fabricated components. Refer to Part 3 "Hanger and Support Applications" Article for where to use specific hanger and support types.

B. Manufacturers:

1. B-Line Systems, Inc.; a division of Cooper Industries.
2. ERICO/Michigan Hanger Co.
3. Grinnell Corp.

C. Galvanized, Metallic Coatings: Pregalvanized or hot dipped.

D. Nonmetallic Coatings: Plastic coating, jacket, or liner.

E. Padded Hangers: Hanger with fiberglass or other pipe insulation pad or cushion for support of bearing surface of piping.

2.03 TRAPEZE PIPE HANGERS

A. Description: MSS SP-69, Type 59, shop- or field-fabricated pipe-support assembly made from structural-steel shapes with MSS SP-58 hanger rods, nuts, saddles, and U-bolts.

2.04 METAL FRAMING SYSTEMS

A. Description: MFMA-3, shop- or field-fabricated pipe-support assembly made of steel channels and other components.

B. Manufacturers:

1. B-Line Systems, Inc.; a division of Cooper Industries.
2. ERICO/Michigan Hanger Co.; ERISTRUT Div.
3. Unistrut Corp.; Tyco International, Ltd.

C. Coatings: Manufacturer's standard finish, unless bare metal surfaces are indicated.

D. Nonmetallic Coatings: Plastic coating, jacket, or liner.

2.05 FASTENER SYSTEMS

A. Powder-Actuated Fasteners: Threaded-steel stud, for use in hardened portland cement concrete with pull-out, tension, and shear capacities appropriate for supported loads and building materials where used.

1. Manufacturers:

a. Hilti, Inc.
b. ITW Ramset/Red Head.
c. Powers Fasteners.

B. Mechanical-Expansion Anchors: Insert-wedge-type zinc-coated steel, for use in hardened portland cement concrete with pull-out, tension, and shear capacities appropriate for supported loads and building materials where used.

1. Manufacturers:

a. B-Line Systems, Inc.; a division of Cooper Industries.
b. Hilti, Inc.
c. ITW Ramset/Red Head.
d. Powers Fasteners.

2.06 EQUIPMENT SUPPORTS

A. Description: Welded, shop- or field-fabricated equipment support made from structural-steel shapes.

2.07 MISCELLANEOUS MATERIALS

A. Structural Steel: ASTM A 36/A 36M, steel plates, shapes, and bars; black and galvanized.

B. Grout: ASTM C 1107, factory-mixed and -packaged, dry, hydraulic-cement, nonshrink and nonmetallic grout; suitable for interior and exterior applications.

1. Properties: Nonstaining, noncorrosive, and nongaseous.
2. Design Mix: 5000-psi, 28-day compressive strength.

PART 3 EXECUTION

3.01 HANGER AND SUPPORT APPLICATIONS

A. Specific hanger and support requirements are specified in Sections specifying piping systems and equipment.

B. Comply with MSS SP-69 for pipe hanger selections and applications that are not specified in piping system Sections.

C. Use hangers and supports with galvanized, metallic coatings for piping and equipment that will not have field-applied finish.

D. Use nonmetallic coatings on attachments for electrolytic protection where attachments are in direct contact with copper tubing.

E. Use padded hangers for piping that is subject to scratching.

F. Horizontal-Piping Hangers and Supports: Unless otherwise indicated and except as specified in piping system Sections, install the following types:

1. Adjustable, Steel Clevis Hangers (MSS Type 1): For suspension of noninsulated or insulated stationary pipes, NPS 1/2 to NPS 30 (DN 15 to DN 750).
2. Yoke-Type Pipe Clamps (MSS Type 2): For suspension of 120 to 450 deg F pipes, NPS 4 to NPS 16 (DN 100 to DN 400), requiring up to 4 inches of insulation.

3. Carbon- or Alloy-Steel, Double-Bolt Pipe Clamps (MSS Type 3): For suspension of pipes, NPS 3/4 to NPS 24 (DN 20 to DN 600), requiring clamp flexibility and up to 4 inches of insulation.
4. Adjustable, Steel Band Hangers (MSS Type 7): For suspension of noninsulated stationary pipes, NPS 1/2 to NPS 8 (DN 15 to DN 200).
5. U-Bolts (MSS Type 24): For support of heavy pipes, NPS 1/2 to NPS 30 (DN 15 to DN 750).
6. Pipe Saddle Supports (MSS Type 36): For support of pipes, NPS 4 to NPS 36 (DN 100 to DN 900), with steel pipe base stanchion support and cast-iron floor flange.
7. Single Pipe Rolls (MSS Type 41): For suspension of pipes, NPS 1 to NPS 30 (DN 25 to DN 750), from 2 rods if longitudinal movement caused by expansion and contraction might occur.
8. Complete Pipe Rolls (MSS Type 44): For support of pipes, NPS 2 to NPS 42 (DN 50 to DN 1050), if longitudinal movement caused by expansion and contraction might occur but vertical adjustment is not necessary.

G. Vertical-Piping Clamps: Unless otherwise indicated and except as specified in piping system Sections, install the following types:

1. Extension Pipe or Riser Clamps (MSS Type 8): For support of pipe risers, NPS 3/4 to NPS 20 (DN 20 to DN 500).
2. Carbon- or Alloy-Steel Riser Clamps (MSS Type 42): For support of pipe risers, NPS 3/4 to NPS 20 (DN 20 to DN 500), if longer ends are required for riser clamps.

H. Hanger-Rod Attachments: Unless otherwise indicated and except as specified in piping system Sections, install the following types:

1. Steel Turnbuckles (MSS Type 13): For adjustment up to 6 inches for heavy loads.
2. Steel Clevises (MSS Type 14): For 120 to 450 deg F piping installations.

I. Building Attachments: Unless otherwise indicated and except as specified in piping system Sections, install the following types:

1. Steel or Malleable Concrete Inserts (MSS Type 18): For upper attachment to suspend pipe hangers from concrete ceiling.
2. Top-Beam C-Clamps (MSS Type 19): For use under roof installations with bar-joist construction to attach to top flange of structural shape.
3. Side-Beam or Channel Clamps (MSS Type 20): For attaching to bottom flange of beams, channels, or angles.
4. Center-Beam Clamps (MSS Type 21): For attaching to center of bottom flange of beams.
5. Welded Beam Attachments (MSS Type 22): For attaching to bottom of beams if loads are considerable and rod sizes are large.

6. C-Clamps (MSS Type 23): For structural shapes.

7. Welded-Steel Brackets: For support of pipes from below, or for suspending from above by using clip and rod. Use one of the following for indicated loads:

   a. Light (MSS Type 31): 750 lb.
   b. Medium (MSS Type 32): 1500 lb.
   c. Heavy (MSS Type 33): 3000 lb.

8. Side-Beam Brackets (MSS Type 34): For sides of steel or wooden beams.
9. Plate Lugs (MSS Type 57): For attaching to steel beams if flexibility at beam is required.

J. Saddles and Shields: Unless otherwise indicated and except as specified in piping system Sections, install the following types:

1. Steel Pipe-Covering Protection Saddles (MSS Type 39): To fill interior voids with insulation that matches adjoining insulation.
2. Protection Shields (MSS Type 40): Of length recommended in writing by manufacturer to prevent crushing insulation.
3. Thermal-Hanger Shield Inserts: For supporting insulated pipe.

K. Spring Hangers and Supports: Unless otherwise indicated and except as specified in piping system Sections, install the following types:

1. Spring Cushions (MSS Type 48): For light loads if vertical movement does not exceed 1-1/4 inches.
2. Spring-Cushion Roll Hangers (MSS Type 49): For equipping Type 41 roll hanger with springs.
3. Variable-Spring Base Supports (MSS Type 52): Preset to indicated load and limit variability factor to 25 percent to absorb expansion and contraction of piping system from base support.

L. Comply with MSS SP-69 for trapeze pipe hanger selections and applications that are not specified in piping system Sections.

M. Comply with MFMA-102 for metal framing system selections and applications that are not specified in piping system Sections.

N. Use mechanical-expansion anchors instead of building attachments where required in concrete construction.

3.02 HANGER AND SUPPORT INSTALLATION

A. Steel Pipe Hanger Installation: Comply with MSS SP-69 and MSS SP-89. Install hangers, supports, clamps, and attachments as required to properly support piping from building structure.

B. Trapeze Pipe Hanger Installation: Comply with MSS SP-69 and MSS SP-89. Arrange for grouping of parallel runs of horizontal piping and support together on field-fabricated trapeze pipe hangers.

1. Pipes of Various Sizes: Support together and space trapezes for smallest pipe size or install intermediate supports for smaller diameter pipes as specified above for individual pipe hangers.
2. Field fabricate from ASTM A 36/A 36M, steel shapes selected for loads being supported. Weld steel according to AWS D1.1.

C. Metal Framing System Installation: Arrange for grouping of parallel runs of piping and support together on field-assembled metal framing systems.

D. Thermal-Hanger Shield Installation: Install in pipe hanger or shield for insulated piping.

E. Fastener System Installation:

1. Install powder-actuated fasteners in concrete after concrete is placed and completely cured. Use operators that are licensed by powder-actuated tool manufacturer. Install fasteners according to powder-actuated tool manufacturer's operating manual.
2. Install mechanical-expansion anchors in concrete after concrete is placed and completely cured. Install fasteners according to manufacturer's written instructions.

F. Install hangers and supports complete with necessary inserts, bolts, rods, nuts, washers, and other accessories.

G. Equipment Support Installation: Fabricate from welded-structural-steel shapes.

H. Install hangers and supports to allow controlled thermal and seismic movement of piping systems, to permit freedom of movement between pipe anchors, and to facilitate action of expansion joints, expansion loops, expansion bends, and similar units.

I. Install lateral bracing with pipe hangers and supports to prevent swaying.

J. Install building attachments within concrete slabs or attach to structural steel. Install additional attachments at concentrated loads, including valves, flanges, and strainers, NPS 2-1/2 (DN 65) and larger and at changes in direction of piping. Install concrete

inserts before concrete is placed; fasten inserts to forms and install reinforcing bars through openings at top of inserts.

K. Load Distribution: Install hangers and supports so piping live and dead loads and stresses from movement will not be transmitted to connected equipment.

L. Pipe Slopes: Install hangers and supports to provide indicated pipe slopes and so maximum pipe deflections allowed by ASME B31.9 (for building services piping) are not exceeded.

M. Insulated Piping: Comply with the following:

1. Attach clamps and spacers to piping.

    a. Piping Operating above Ambient Air Temperature: Clamp may project through insulation.
    b. Piping Operating below Ambient Air Temperature: Use thermal-hanger shield insert with clamp sized to match OD of insert.
    c. Do not exceed pipe stress limits according to ASME B31.9 for building services piping.

2. Install MSS SP-58, Type 39, protection saddles if insulation without vapor barrier is indicated. Fill interior voids with insulation that matches adjoining insulation.
3. Install MSS SP-58, Type 40, protective shields on cold piping with vapor barrier. Shields shall span an arc of 180 degrees.
4. Shield Dimensions for Pipe: Not less than the following:

    a. NPS 1/4 to NPS 3-1/2 (DN 8 to DN 90): 12 inches long and 0.048 inch thick.
    b. NPS 4 (DN 100): 12 inches long and 0.06 inch thick.
    c. NPS 5 and NPS 6 (DN 125 and DN 150): 18 inches long and 0.06 inch thick.
    d. NPS 8 to NPS 14 (DN 200 to DN 350): 24 inches long and 0.075 inch thick.
    e. NPS 16 to NPS 24 (DN 400 to DN 600): 24 inches long and 0.105 inch thick.

5. Pipes NPS 8 (DN 200) and Larger: Include wood inserts.
6. Insert Material: Length at least as long as protective shield.
7. Thermal-Hanger Shields: Install with insulation same thickness as piping insulation.

3.03 EQUIPMENT SUPPORTS

A. Fabricate structural-steel stands to suspend equipment from structure overhead or to support equipment above floor.

B. Grouting: Place grout under supports for equipment and make smooth bearing surface.

C. Provide lateral bracing, to prevent swaying, for equipment supports.

3.04 METAL FABRICATIONS

A. Cut, drill, and fit miscellaneous metal fabrications for trapeze pipe hangers and equipment supports.

B. Fit exposed connections together to form hairline joints. Field weld connections that cannot be shop welded because of shipping size limitations.

C. Field Welding: Comply with AWS D1.1 procedure for shielded metal arc welding, appearance and quality of welds, and methods used in correcting welding work, and with the following:

1. Use materials and methods that minimize distortion and develop strength and corrosion resistance of base metals.
2. Obtain fusion without undercut or overlap.
3. Remove welding flux immediately.
4. Finish welds at exposed connections so no roughness shows after finishing and contours of welded surfaces match adjacent contours.

3.05 ADJUSTING

A. Hanger Adjustments: Adjust hangers to distribute loads equally on attachments and to achieve indicated slope of pipe.

3.06 PAINTING

A. Touch Up: Clean field welds and abraded areas of shop paint. Paint exposed areas immediately after erecting hangers and supports. Use same materials as used for shop painting. Comply with SSPC-PA 1 requirements for touching up field-painted surfaces.

1. Apply paint by brush or spray to provide minimum dry film thickness of 2.0 mils (0.05 mm).

B. Galvanized Surfaces: Clean welds, bolted connections, and abraded areas and apply galvanizing-repair paint to comply with ASTM A 780.

END OF SECTION

SECTION 22 07 00

PLUMBING INSULATION

PART 1 - GENERAL

1.01 DESCRIPTION:

A. Provide new and modify existing field-applied insulation as indicated and in compliance with Contract Documents. The Work of this Section shall include all labor, materials, tools, equipment and appurtenances, and performing all operations necessary to furnish and install complete systems in accordance with this Section of these Specifications, the Drawings, and the codes and standards listed herein.

B. Limits of Work shall be as indicated on the Drawings. Items of Work shall consist of the following:

1. Insulate plumbing piping.

1.02 REFERENCES:

A. Except as specified herein, the latest edition of the standards listed below form a part of this Specification to the extent referenced in this Section. Where earlier editions of standards are adopted as referenced in applicable codes, those shall govern. The publications are referred to within the text by the basic designation only.

B. In each of the standards referred to herein, consider the advisory provisions to be mandatory, as though the word, "shall" had been substituted for "should" wherever it appears.

C. ASTM International (ASTM):

1. A167: Stainless and Heat-Resisting Chromium-Nickel Steel Plate, Sheet and Strip

2. A240: Chromium and Chromium-Nickel Stainless Steel Plate, Sheet, and Strip for Pressure Vessels for General Applications

3. C195: Mineral Fiber Thermal Insulating Cement

4. C533: Calcium Silicate Block and Pipe Thermal Insulation

5. C534: Preformed Flexible Elastomeric Cellular Thermal Insulation in Sheet and Tubular Form

6. C547: Mineral Fiber Pipe Insulation

7. C552: Cellular Glass Thermal Insulation

8. C553: Mineral Fiber Blanket Thermal Insulation for Commercial and Industrial Applications

9. C591: Unfaced Preformed Rigid Cellular Polyisocyanurate Thermal Insulation

10. C592: Mineral Fiber Blanket Insulation and Blanket-Type Pipe Insulation (Metal-Mesh Covered) (Industrial Type)

11. C612: Mineral Fiber Block and Board Thermal Insulation

12. C916: Adhesives for Duct Thermal Insulation

13. C1126: Faced or Unfaced Rigid Cellular Phenolic Thermal Insulation

14. C1136: Flexible, Low Permeance Vapor Retarders for Thermal Insulation

15. E 84: Surface Burning Characteristics of Building Materials

D. National Fire Protection Association (NFPA):

1. 255: Method of Test of Surface Burning Characteristics of Building Materials

E. Underwriters Laboratories (UL):

1. 723: Test for Surface Burning Characteristics of Building Materials

1.03 SUBMITTALS:

A. Submit the following in accordance with Section 01 33 00:

1. Product Data - Annotate descriptive data to show the specific manufacturer, material and specifications, thicknesses, etc. of each item.

a. Piping insulation and jackets

b. Adhesives, sealants, and coating compounds

c. Accessory materials

2. Certificates and Licenses - Prepare as specified in Part 1 of this Section.

a. Qualifications of Installer

1.04 QUALITY ASSURANCE:

A. Qualifications of Installer

1. Prior to installation, submit data showing the name and license of the installing contractor and that he has successfully installed systems of the same type and

design as specified herein. Data shall include names and locations of at least two installations of such systems. Indicate type and design of each system and certify that each system has performed satisfactorily in the manner intended for not less than 18 months. The installing contractor shall be licensed to perform applicable insulation installation in the state in which the project is located.

1.05 DELIVERY, STORAGE AND HANDLING:

A. Provide in accordance with Section 01 61 00 and as specified herein.

B. Shipping:

1. All material shall be shipped, stored, handled and installed in such a manner as not to degrade quality, serviceability, or appearance. Material warranties shall not be voided by actions of the Contractor.

C. Receiving:

1. All material shall be delivered to the site in original packages or containers bearing the manufacturer's labels and product identification.

2. Inspect for damage and correctness, and inventory items, upon delivery to site.

3. Store and safeguard material in accordance with manufacturer's recommendations.

1.06 COOPERATION AND COORDINATION WITH OTHER TRADES:

A. Work shall be performed in cooperation with other trades on the project and so scheduled as to allow efficient completion of the project. Materials and equipment shall be installed as fast as conditions will permit, and installed properly when and as directed.

B. Furnish to all other trades advance layout information and shop drawings necessary to permit other trades affected by the Work to install their work properly coordinated and without delay.

C. Where there is evidence that Work installed interferes with the work of other Sections, assist in working out space conditions to make satisfactory adjustments.

D. With the approval of the Engineer and without extra cost to the Owner, make reasonable modifications in Work specified under this Section of the Specifications required to coordinate with normal structural interference's, or for proper execution of specified work.

E. If Work is installed before coordinating with other trades so as to cause interference with the work of such trades, make all necessary changes in Work under this Section of the Specifications at no additional cost to the Owner.

F. Protect all materials and work of other trades from damage that may be caused by the Work required under this Section of the Specifications and be responsible for repairing any damages caused by such work without any additional cost to the Owner.

G. Attend regular coordination and job progress meetings required.

1.07 REMOVAL WORK:

A. Particular care shall be taken to avoid creating hazards on the site or causing disruption of service in the buildings.

B. All existing insulation materials indicated to be removed shall be done in a neat and workmanlike manner. All insulation material shall be removed from the premises.

C. Remove insulation from all abandoned ductwork, piping, and equipment not built into building construction. Remove all insulation from abandoned piping, ductwork and equipment in attic spaces. Where ceilings or walls are removed all insulation on abandoned ductwork and piping shall be removed. Abandoned elements built into walls to remain shall be left in place.

D. Should any asbestos and/or asbestos related products or materials be encountered during the performance of the Work, stop work immediately and inform the Engineer and the Owner of the presence of asbestos.

1.08 CODES, PERMITS AND FEES:

A. Except for additional requirements as specified or indicated under the Work of this Section, materials, workmanship and equipment shall conform with the governing edition of the following regulations, and agency requirements. In the Energy Conservation Code referred to herein, the advisory provisions shall be considered to be mandatory, as though the word "shall" had been substituted for "should" wherever it appears.

1. State and Local Building Codes, including but not limited to, New Mexico Energy Conservation Code.

2. New Mexico Department of Environmental Protection.

3. Local Fire Department

4. Occupational Safety and Health Administration (OSHA)

5. Any other local codes or requirements of Authorities Having Jurisdiction.

B. Pay for all fees and give all notices, file all plans, obtain all permits and licenses, and obtain all necessary approvals from Authorities Having Jurisdiction. Deliver all certificates of inspection to the Authorities Having Jurisdiction. No work shall be covered before examination and approval by Authorities Having Jurisdiction. Replace imperfect or condemned work to conform to inspectional requirements, satisfactory to the

Architect, Owner, Engineer and Authorities Having Jurisdiction without extra cost to the Owner. If Work is covered before inspection and approval, pay costs of uncovering and reinstalling the covering, whether it meets contract requirements or not.

PART 2 - PRODUCTS

2.01 GENERAL:

A. Packaging and Labeling:

1. Every package or standard container of insulation, jackets, cements, adhesives, and coatings delivered to project site shall have manufacturer's stamp or label attached giving name of manufacturer, brand and description of material. Insulation materials shall be asbestos-free.

B. Surface Burning Characteristics:

1. Materials shall have a flame-spread rating of not more than 25 and a smoke-developed rating of not more than 50, when tested in accordance with NFPA 255, ASTM E84 or UL 723. Insulation materials located exterior to the building perimeter are not required to be fire-rated.

C. Recycled Materials:

1. Provide thermal insulation containing recycled materials to the extent practicable, provided that the materials meet all other requirements of this Section. The minimum recycled material content of the following insulation types are:

a. Rock Wool: 75 percent slag of weight

b. Fiberglass: 20 to 25 percent glass cullet by weight

c. Phenolic Rigid Foam: 5 percent recovered material

d. Plastic Rigid Foam: 9 percent recovered material

e. Polyiscocyanurate/Polyurethane: 9 percent recovered material

f. Rigid Foam: 9 percent recovered material

2.02 PIPING INSULATION

A. Insulation material shall conform to Table 22 07 00-1. Insulation thickness shall be as listed in Table 22 07 00-2. Insulate all piping listed in these tables. Where piping is located in unheated spaces such as attics and crawl spaces, provide insulation thickness one inch thick greater than indicated in Table 22 07 00-2. Insulation exterior shall be factory cleanable, grease resistant, non-flaking and non-peeling.

B. Fittings Insulation:

1. Factory premolded insulation inserts for pipe fittings, flanges and valves shaped to fit the specific fitting to be insulated. Inserts shall be of same material as the straight pipe. Inserts shall be of same thickness as the straight pipe insulation.

C. Piping Insulation Jackets:

1. All-Purpose Jackets:

a. Insulation manufacturer's standard reinforced fire retardant jacket with or without integral vapor barrier as required by the service. Provide jackets in exposed locations with a white surface suitable for field painting.

2. PVC Jackets:

a. ASTM D1784 polyvinyl chloride (PVC) jackets, minimum 15 mil thick, and factory premolded PVC fitting covers, UV-resistant, gloss white finish. Provide compatible vapor barrier tape.

3. Metal Jackets:

a. Aluminum Jackets: ASTM B209, Temper H14, minimum thickness of 27 gage (0.016 inch), with factory-applied polyethylene and kraft paper moisture barrier on inside surface. Provide smooth surface jackets for jacket outside diameters less than 8 inches (DN 200). Provide corrugated surface jackets for jacket outside diameters 8 inches (DN 200) and larger. Provide stainless steel bands, minimum width of 1/2-inch (12.7 mm). Provide factory prefabricated aluminum covers for insulation on fittings, valves, and flanges. Covers shall be same thickness and material as jackets on adjacent piping.

b. Stainless Steel Jackets: ASTM A167 or ASTM A240; Type 304, minimum thickness of 33 gage (0.010 inch), smooth surface with factory-applied polyethylene and kraft paper moisture barrier on inside surface. Provide stainless steel bands, minimum width of 1/2-inch (12.7 mm). Provide factory prefabricated stainless steel covers for insulation on fittings, valves, and flanges. Covers shall be same thickness and materials as jackets on adjacent piping.

D. Lavatory Kits:

1. Kits specifically designed for insulating lavatory waste and supply finish piping for ADA compliance, fabricated from UV resistant PVC, with tear-to-fit trim grooves, internal ribs and internal fasteners, and vent slots to keep air space between covers and piping dry, glossy white finish. Manufactured by Truebro or accepted equal.

2.03 ADHESIVES, SEALANTS, AND COATING COMPOUNDS:

A. Insulation and Vapor Barrier Adhesive: ASTM C916, Type I adhesive for securing insulation to metal surfaces and for vapor barrier lap only in building interior.

B. Lagging Adhesive: Fire resistant, for pipe and duct insulation.

1. Provide appropriate class recommended by insulation manufacturer for bonding fibrous glass cloth to unfaced fibrous glass insulation; for bonding cotton brattice cloth to faced and unfaced fibrous glass insulation board; for sealing edges of and bonding fibrous glass tape to joints of fibrous glass board; or for bonding lagging cloth to thermal insulation.

2. Provide appropriate class for attaching fibrous glass insulation to metal surfaces.

C. Mineral Fiber Insulation Cement: ASTM C195.

D. Vapor Barrier Coating: Provide in accordance with insulation manufacturers' recommendations.

E. Weatherproof Coating: For outside applications, provide in accordance with insulation and jacket manufacturer's recommendations.

F. Flexible Cellular Insulation Adhesive: Air-drying contact adhesive for joining insulation longitudinal seams and butt joints.

G. Flexible Cellular Insulation Coating: Water-based latex enamel for protective finish. Do not use vinyl lacquer finish or equivalent.

2.04 ACCESSORY MATERIALS:

A. Staples: ASTM A167, Type 304 or 316 stainless steel outside-clinch type.

B. Insulation Bands: 1/2-inch (12.7 mm) wide; 26 gage stainless steel.

C. Metal Bands: 3/8-inch (9.5 mm) minimum width; 26 gage stainless steel or 24 gage aluminum.

D. Fibrous Glass Cloth and Tape: 20 by 20 maximum size mesh. Tape shall be 4 inch (127 mm) wide rolls. Tape shall be 4.5 ounces per square yard (153 grams per square meter). In lieu of glass cloth and tape, open weave glass membrane may be provided.

E. Wire: Soft annealed stainless steel, 16 gage.

F. PVC Pipe Fitting Cover and Its Vapor Barrier Tape: Provide PVC fitting covers with insulation inserts of same material and thickness as pipe insulation.

G. Vapor Barrier Materials: ASTM C1136. Resistant to flame, moisture penetration, and mold growth, color white.

PART 3 - EXECUTION

3.01 GENERAL:

A. Do not insulate the following:

1. Unions
2. ASME stamps
3. Cleanouts or handholes
4. Manufacturer's nameplates
5. Chrome plated pipes
6. Flexible connectors

3.02 PIPING INSULATION:

A. Insulation (Except Flexible Cellular and Calcium Silicate Insulation):

1. Place sections of insulation around pipe and joints tightly butted into place. Draw jacket tight and smooth. Secure jacket with fire resistant adhesive, factory-applied self-sealing lap, or stainless steel outward clinching staples spaced not over 4 inches (101.6 mm) on center and 1/2-inch (12.7 mm) minimum from edge of lap. Cover circumferential joints with butt strips, not less than 3 inches (76.2 mm) wide, of material identical to jacket material. Overlap longitudinal laps of jacket material not less than 1-1/2 inches (38.1 mm). Adhesive used to secure butt strip shall be same as that used to secure jacket laps. Apply staples to both edges of butt strips.

2. Vapor Barrier Jacket: When a vapor barrier jacket is required, as indicated in Table 22 07 00-1, on ends of sections of insulation that butt against flanges, unions, valves, fittings, and joints, provide a vapor barrier coating, or manufacturer's weatherproof coating for outside service, unless pipe insulation is supplied with factory-applied self-seal lap. Apply vapor barrier coating at longitudinal and circumferential laps. Patch damaged jacket material by wrapping a strip of jacket material around the pipe and cementing, stapling, and coating as specified for butt strips. Extend patch not less than 1-1/2 inches (38.1 mm) past the break in both directions. At penetrations by pressure gages, thermometers, etc. fill voids with vapor barrier coating for outside service. Seal with a brush coat of the same coating.

B. Flexible Cellular Insulation:

1. Do not use flexible cellular insulation for pipes in fire rated chases and inside fire walls.

2. Bond cuts, butt joints, ends, and longitudinal joints with adhesive. Miter 90-degree turns and elbows, tees, and valve insulation. Where pipes penetrate fire walls, provide calcium silicate or mineral-fiber insulation inserts and metal jackets. Insulate flanges, unions, valves, and fittings in accordance with manufacturer's published instructions. Apply two coats of acrylic latex or equivalent finish as recommended by insulation manufacturer to flexible unicellular insulation in outside locations. Do not use vinyl lacquer finish or equivalent. Provide flexible cellular insulation for outdoor use with ultraviolet (UV) resistant coating.

C. Cellular Glass and Calcium Silicate Insulation:

1. Provide in accordance with manufacturer's printed instructions.

D. Piping Insulation Jackets:

1. All-Purpose Jackets:

a. Provide all-purpose jackets and PVC fitting covers for all piping.

2. Polyvinyl Chloride (PVC) Jackets:

a. Provide PVC jacketing system to cover all pipe fittings, flanges and valves of services to be insulated. Do not provide PVC jacketing where exposed to weather. Provide PVC jacketing only in ambient temperatures below 150 degrees F (65.6 degrees C). Do not provide PVC jacketing at insulated pipe through-penetrations.

b. Secure jacketing with stapling, with metal or plastic tacks made for securing PVC jackets, or with jacket manufacturer's solvent welding adhesive to seal all lap joints in the system. For services where vapor barrier is required, provide vapor retarder mastic compatible with PVC as recommended by the jacket manufacturer applied over all lap joints in the jacketing system, or provide taping with PVC vapor barrier tape. Provide factory prefabricated PVC covers for insulation on fittings, valves, and flanges.

3. Metal Jackets:

a. Provide metal jacketing at insulated pipe through-penetrations.

b. Provide stainless steel bands to secure jackets to insulation. Provide factory prefabricated metal covers for insulation on fittings, valves, and flanges.

E. Hangers and Anchors:

1. Pipe insulation shall be continuous through pipe hangers. Where pipe is supported by insulation, provide galvanized steel shields or protection saddles.

2. Where shields are used on pipes 2 inches (DN 50) and larger, provide insulation inserts at points of hangers and supports. Insulation inserts shall be of calcium silicate, cellular glass, molded glass fiber, rigid foam or other approved material, all minimum 15 pounds per square inch (103 kPa) compressive strength, of the same thickness as adjacent insulation. Insulation inserts shall cover bottom half of pipe circumference and be not less in length than the protection shield. Vapor-barrier facing of insert shall be of same material as facing on adjacent insulation. Seal inserts into insulation with vapor barrier coating or weatherproof coating as applicable.

3. Where protection saddles are used, fill voids with same insulation material as used on adjacent pipe. Protection saddles shall not be used on piping carrying medium less than 60 degrees F (15.6 degrees C).

4. Where anchors are secured to piping carrying medium less than 60 degrees F (15.6 degrees C) that is to be insulated, insulate anchors same as piping for a distance not less than four times the insulation thickness to prevent condensation. Vapor seal insulation around anchors.

F. Through-Penetrations:

1. Where interior wall is penetrated, extend a metal jacket 2 inches (50.8 mm) out on either side of wall and secure on each end with a metal band. Where floor is penetrated, extend a metal jacket from a point below the floor slab to a point 10 inches (254 mm) above floor with one metal band at the floor and one not more than one inch from end of metal jacket. Where exterior wall is penetrated, extend metal jacket through sleeve to a point 2 inches (50.8 mm) beyond interior surface of wall.

2. Provide insulation inserts beneath the metal jacket. Insulation inserts shall be of calcium silicate or cellular glass of the same thickness as adjacent insulation. Insulation inserts shall cover full pipe circumference and be not less in length than the metal jacket. Vapor-barrier facing of insert shall be of same material as facing on adjacent insulation. Seal inserts into insulation with vapor barrier coating.

G. Flanges, Unions, Valves and Fittings for Piping:

1. Factory fabricated removable and reusable insulation inserts shall be used. When nesting size insulation is used, overlap 2 inches (50.8 mm) or one pipe diameter, whichever is larger. Use insulating cement to fill voids. On pipe sizes larger than 2-1/2 inches (63.5 mm), elbows insulated using insulation segments shall not have less than three segments per elbow. Place and join segments with manufacturer's recommended water-vapor resistant, fire retardant adhesive appropriate for the temperature limit of the service. Overlap tape seams one inch (25.4 mm). Total dry film thickness shall be not less than 1/16-inch (1.59 mm). Unions are not to be insulated; taper insulation to union at a 45 degree angle.

2. Provide finish of one of the following:

a. PVC Fitting Covers: Secure covers with stapling, taping with PVC vapor barrier tape, or with metal or plastic tacks made for securing PVC fitting covers. Do not provide PVC fitting covers where exposed to weather.

b. Metal Jacket Fitting Covers: Secure covers with stainless steel bands. Provide minimum 2 bands per fitting cover unless more are prescribed per manufacturer instructions.

c. Coating with Embedded Glass Tape: Coating with Embedded Glass Tape may be provided in lieu of PVC Fitting Covers. Coat insulation and all purpose jacket with two coats of lagging adhesive and with glass tape embedded between coats. Total dry film thickness shall not be less than 1/16-inch (1.59 mm). For cold piping, seal insulation and jacket with two coats of vapor barrier coating with glass tape embedded between coats.

H. Piping Exposed to Weather

1. Metal Jackets: Provide over insulation. Machine cut jacket to smooth edge of circumferential joints. Overlap jacket not less than 2 inches (50.8 mm) at longitudinal and circumferential joints and secure with metal bands at not more than 9 inch (228.6 mm) centers. Overlap longitudinal joints down to shed water. Seal joints with a coating recommended by insulation manufacturer for weatherproofing.

2. Flanges, Unions, Valves, Fittings, and Accessories: Insulate and finish as specified hereinbefore for applicable service. Apply two coats of an emulsion type weatherproof mastic for hot service and vapor barrier mastic for cold service recommended by insulation manufacturer. Embed glass tape in the first coat. Overlap tape not less than 1 inch (25.4 mm) and the adjoining metal jacket not less than 2 inches (50.8 mm).

3.03 FIELD QUALITY CONTROL:

A. Except as otherwise permitted herein, Mechanical systems shall be cleaned and tested prior to application of insulation. Obtain Engineer's approval of systems before applying field insulation. Visually inspect to ensure that insulation materials provided conform to Specifications. Inspect installation of insulation for compliance with requirements.

1. Piping systems shall not be insulated before systems pressure testing and related inspections.

3.04 CLOSEOUT ACTIVITIES:

A. Provide in accordance with Section 01 77 00.

TABLE 22 07 00-1
INSULATION MATERIAL FOR PIPING

Service	Material	Spec	Type	Class	Vapor Barrier Required
Plumbing Domestic Hot Water and Recirculating Piping (Maximum 200 degrees°F) (93 degrees C)	Mineral Fiber	ASTM C547		1	No
	Cellular Glass	ASTM C552	II	2	No
	Urethane	ASTM C591			Yes
	Faced Phenolic Foam	ASTM C1126	III		Yes
Plumbing Domestic Cold Water Piping	Mineral Fiber	ASTM C547		1	Yes
	Cellular Glass	ASTM C552	II	2	No
	Urethane	ASTM C591			Yes
	Flexible Cellular	ASTM C534	I		No
Exposed Lavatory Drains, Exposed Domestic Water Piping & Drains to Areas for Handicap Personnel	Flexible Cellular	ASTM C534	I		No

TABLE 22 07 00-2
PIPING INSULATION THICKNESS (INCH)

Service	Material	Tube and Pipe Size (Inches) (DN)				
		1/4 – 1-1/4 (8-32)	**1 1/2-3 (40-80)**	**3 1/2-5 (90-125)**	**6-10 (150-250)**	**11-36 (275-900)**
Plumbing Domestic Hot Water and Recirculating Piping (Maximum 200°F) (93 deg C)	Mineral Fiber	1 (25.4)	1 (25.4)	1.5 (38.1)	1.5 (38.1)	1.5 (38.1)
	Cellular Glass	1.5 (38.1)	1.5 (38.1)	1.5 (38.1)	1.5 (38.1)	1.5 (38.1)
	Urethane	0.75 (19.1)	0.75 (19.1)	1 (25.4)	1 (25.4)	1 (25.4)
	Faced Phenolic Foam	1 (25.4)	1 (25.4)	1 (25.4)	1 (25.4)	1 (25.4)
Plumbing Domestic Cold Water Piping	Mineral Fiber	0.75 (19.1)	1 (25.4)	1 (25.4)	1 (25.4)	1 (25.4)
	Cellular Glass	1.5 (38.1)	1.5 (38.1)	1.5 (38.1)	1.5 (38.1)	1.5 (38.1)
	Flexible Cellular	0.5 (12.7)	0.5 (12.7)	0.5 (12.7)	N/A	N/A
	Urethane	0.75 (19.1)	0.75 (19.1)	0.75 (19.1)	1 (25.4)	1 (25.4)
	Faced Phenolic Foam	1 (25.4)	1 (25.4)	1 (25.4)	1 (25.4)	1 (25.4)
Exposed Lavatory Drains, Exposed Domestic Water Piping & Drains to Areas for Handicap Personnel	Flexible Cellular	0.5 (12.7)	0.5 (12.7)	0.5 (12.7)	0.5 (12.7)	0.5 (12.7)

END OF SECTION

SECTION 22 11 16

DOMESTIC WATER PIPING

PART 1 - GENERAL

1.1 SUMMARY

A. Section includes under-building-slab and aboveground domestic water pipes, tubes, and fittings inside buildings.

1.2 ACTION SUBMITTALS

A. Product Data: For transition fittings and dielectric fittings.

1.3 INFORMATIONAL SUBMITTALS

A. System purging and disinfecting activities report.

B. Field quality-control reports.

PART 2 - PRODUCTS

2.1 PIPING MATERIALS

A. Comply with requirements in "Piping Schedule" Article for applications of pipe, tube, fitting materials, and joining methods for specific services, service locations, and pipe sizes.

B. Potable-water piping and components shall comply with NSF 14 and NSF 61. Plastic piping components shall be marked with "NSF-pw."

2.2 Copper Tube and Fittings

A. Hard copper tube ASTM B88, Type L.

1. Copper Solder Joint Fittings.

2.3 PIPING JOINING MATERIALS

A. Solder filler metals: ASTM B 32, lead free alloys, Include water washable flux according to ASTM B 813.

B. Pipe-Flange Gaskets, Bolts, and Nuts: Type and material recommended by piping system manufacturer unless otherwise indicated.

2.4 TRANSITION FITTINGS

A. General Requirements:

1. Same size as pipes to be joined.
2. Pressure rating at least equal to pipes to be joined.
3. End connections compatible with pipes to be joined.

B. Fitting-Type Transition Couplings: Manufactured piping coupling or specified piping system fitting.

C. Plastic-to-Metal Transition Fittings:

1. Basis-of-Design Product: Subject to compliance with requirements, provide product indicated on Drawings or comparable product by one of the following:

   a. Charlotte Pipe and Foundry Company.
   b. Harvel Plastics, Inc.
   c. Spears Manufacturing Company.

2. Description:

   a. CPVC one-piece fitting with manufacturer's Schedule 80 equivalent dimensions.
   b. One end with threaded brass insert and one solvent-cement-socket or threaded end.

D. Plastic-to-Metal Transition Unions:

1. Basis-of-Design Product: Subject to compliance with requirements, provide product indicated on Drawings or comparable product by one of the following:

   a. Colonial Engineering, Inc.
   b. NIBCO Inc.
   c. Spears Manufacturing Company.

2. Description:

    a. CPVC four-part union.
    b. Brass threaded end.
    c. Solvent-cement-joint or threaded plastic end.
    d. Rubber O-ring.
    e. Union nut.

2.5 DIELECTRIC FITTINGS

A. General Requirements: Assembly of copper alloy and ferrous materials with separating nonconductive insulating material. Include end connections compatible with pipes to be joined.

B. Dielectric Unions:

1. Basis-of-Design Product: Subject to compliance with requirements, provide product indicated on Drawings or comparable product by one of the following:
    a. Jomar International.
    b. Watts; a division of Watts Water Technologies, Inc.
    c. Wilkins; a Zurn company.

2. Standard: ASSE 1079.
3. Pressure Rating: 125 psig minimum at 180 deg F.
4. End Connections: Solder-joint copper alloy and threaded ferrous.

C. Dielectric Flanges:

1. Basis-of-Design Product: Subject to compliance with requirements, provide product indicated on Drawings or comparable product by one of the following:
    a. Matco-Norca.
    b. Watts; a division of Watts Water Technologies, Inc.
    c. Wilkins; a Zurn company.

2. Standard: ASSE 1079.
3. Factory-fabricated, bolted, companion-flange assembly.
4. Pressure Rating: 125 psig minimum at 180 deg F.
5. End Connections: Solder-joint copper alloy and threaded ferrous; threaded solder-joint copper alloy and threaded ferrous.

D. Dielectric-Flange Insulating Kits:

1. Basis-of-Design Product: Subject to compliance with requirements, provide product indicated on Drawings or comparable product by one of the following:

    a. Advance Products & Systems, Inc.
    b. Calpico, Inc.
    c. Central Plastics Company.

2. Nonconducting materials for field assembly of companion flanges.
3. Pressure Rating: 150 psig.
4. Gasket: Neoprene or phenolic.
5. Bolt Sleeves: Phenolic or polyethylene.
6. Washers: Phenolic with steel backing washers.

E. Dielectric Nipples:

1. Basis-of-Design Product: Subject to compliance with requirements, provide product indicated on Drawings or comparable product by one of the following:
    a. Grinnell Mechanical Products; Tyco Fire Products LP.
    b. Matco-Norca.
    c. Precision Plumbing Products, Inc.

2. Standard: IAPMO PS 66.
3. Electroplated steel nipple complying with ASTM F 1545.
4. Pressure Rating and Temperature: 300 psig at 225 deg F.
5. End Connections: Male threaded or grooved.
6. Lining: Inert and noncorrosive, propylene.

PART 3 - EXECUTION

3.1 EARTHWORK

A. Comply with requirements in Section 312000 "Earth Moving" for excavating, trenching, and backfilling.

3.2 PIPING INSTALLATION

A. Drawing plans, schematics, and diagrams indicate general location and arrangement of domestic water piping. Indicated locations and arrangements are used to size pipe and calculate friction loss, expansion, and other design considerations. Install piping as indicated unless deviations to layout are approved on coordination drawings.

B. Install copper tubing under building slab according to CDA's "Copper Tube Handbook."

C. Install shutoff valve, hose-end drain valve, strainer, pressure gage, and test tee with valve inside the building at each domestic water-service entrance. Comply with requirements for pressure gages in Section 220519 "Meters and Gages for Plumbing Piping" and with requirements for drain valves and strainers in Section 221119 "Domestic Water Piping Specialties."

D. Install shutoff valve immediately upstream of each dielectric fitting.

E. Install water-pressure-reducing valves downstream from shutoff valves. Comply with requirements for pressure-reducing valves in Section 221119 "Domestic Water Piping Specialties."

F. Install domestic water piping level without pitch and plumb.

G. Install piping concealed from view and protected from physical contact by building occupants unless otherwise indicated and except in equipment rooms and service areas.

H. Install piping indicated to be exposed and piping in equipment rooms and service areas at right angles or parallel to building walls. Diagonal runs are prohibited unless specifically indicated otherwise.

I. Install piping above accessible ceilings to allow sufficient space for ceiling panel removal, and coordinate with other services occupying that space.

J. Install piping to permit valve servicing.

K. Install nipples, unions, special fittings, and valves with pressure ratings the same as or higher than the system pressure rating used in applications below unless otherwise indicated.

L. Install piping free of sags and bends.

M. Install fittings for changes in direction and branch connections.

N. Install unions in copper tubing at final connection to each piece of equipment, machine, and specialty.

O. Install thermostats in hot-water circulation piping. Comply with requirements for thermostats in Section 221123 "Domestic Water Pumps."

P. Install thermometers on inlet and outlet piping from each water heater. Comply with requirements for thermometers in Section 220519 "Meters and Gages for Plumbing Piping."

Q. Install sleeves for piping penetrations of walls, ceilings, and floors. Comply with requirements for sleeves specified in Section 220517 "Sleeves and Sleeve Seals for Plumbing Piping."

R. Install sleeve seals for piping penetrations of concrete walls and slabs. Comply with requirements for sleeve seals specified in Section 220517 "Sleeves and Sleeve Seals for Plumbing Piping."

S. Install escutcheons for piping penetrations of walls, ceilings, and floors. Comply with requirements for escutcheons specified in Section 220518 "Escutcheons for Plumbing Piping."

3.3 JOINT CONSTRUCTION

A. Ream ends of pipes and tubes and remove burrs. Bevel plain ends of steel pipe.

B. Remove scale, slag, dirt, and debris from inside and outside of pipes, tubes, and fittings before assembly.

C. Joints for Dissimilar-Material Piping: Make joints using adapters compatible with materials of both piping systems.

3.4 TRANSITION FITTING INSTALLATION

A. Install transition couplings at joints of dissimilar piping.

B. Transition Fittings in Underground Domestic Water Piping:

1. Fittings for NPS 1-1/2 (DN 40) and Smaller: Fitting-type coupling.
2. Fittings for NPS 2 (DN 50) and Larger: Sleeve-type coupling.

C. Transition Fittings in Aboveground Domestic Water Piping NPS 2 (DN 50) and Smaller: Plastic-to-metal transition fittings or unions.

3.5 DIELECTRIC FITTING INSTALLATION

A. Install dielectric fittings in piping at connections of dissimilar metal piping and tubing.

B. Dielectric Fittings for NPS 2 (DN 50) and Smaller: Use dielectric couplings or unions.

C. Dielectric Fittings for NPS 2-1/2 to NPS 4 (DN 65 to DN 100): Use dielectric flange kits.

3.6 HANGER AND SUPPORT INSTALLATION

A. Comply with requirements for seismic-restraint devices in Section 220548 "Vibration and Seismic Controls for Plumbing Piping and Equipment."

B. Comply with requirements for pipe hanger, support products, and installation in Section 220529 "Hangers and Supports for Plumbing Piping and Equipment."

1. Vertical Piping: MSS Type 8 or 42, clamps.
2. Individual, Straight, Horizontal Piping Runs:

    a. 100 Feet (30 m) and Less: MSS Type 1, adjustable, steel clevis hangers.
    b. Longer Than 100 Feet (30 m): MSS Type 43, adjustable roller hangers.
    c. Longer Than 100 Feet (30 m) if Indicated: MSS Type 49, spring cushion rolls.

3. Multiple, Straight, Horizontal Piping Runs 100 Feet (30 m) or Longer: MSS Type 44, pipe rolls. Support pipe rolls on trapeze.
4. Base of Vertical Piping: MSS Type 52, spring hangers.

C. Support vertical piping and tubing at base and at each floor.

D. Rod diameter may be reduced one size for double-rod hangers, to a minimum of 3/8 inch.

E. Install copper clad hangers for copper piping with the following maximum horizontal spacing and minimum rod diameters:

1. NPS 3/4 and Smaller: 60 inches with 3/8-inch rod.
2. NPS 1 to NPS 1 1/4: 72 inches with 3/8-inch rod.
3. NPS 1-1/2 to NPS 2: 96 inches with 3/8-inch rod.
4. NPS 2 1/2: 108 inches with 1/2-inch rod.
5. NPS 3 to 5: 10 feet with 3/4-inch rod.
6. NPS 6 to 8: 10 feet with 3/4-inch rod.

F. Support piping and tubing not listed in this article according to MSS SP-69 and manufacturer's written instructions.

3.7 CONNECTIONS

A. Drawings indicate general arrangement of piping, fittings, and specialties.

B. When installing piping adjacent to equipment and machines, allow space for service and maintenance.

C. Connect domestic water piping to exterior water-service piping. Use transition fitting to join dissimilar piping materials.

D. Connect domestic water piping to water-service piping with shutoff valve; extend and connect to the following:

1. Water Heaters: Cold-water inlet and hot-water outlet piping in sizes indicated, but not smaller than sizes of water heater connections.
2. Plumbing Fixtures: Cold- and hot-water-supply piping in sizes indicated, but not smaller than that required by plumbing code.
3. Equipment: Cold- and hot-water-supply piping as indicated, but not smaller than equipment connections. Provide shutoff valve and union for each connection. Use flanges instead of unions for NPS 2-1/2 (DN 65) and larger.

3.8 IDENTIFICATION

A. Identify system components. Comply with requirements for identification materials and installation in Section 220553 "Identification for Plumbing Piping and Equipment."

B. Label pressure piping with system operating pressure.

3.9 FIELD QUALITY CONTROL

A. Perform the following tests and inspections:

1. Piping Inspections:

   a. Do not enclose, cover, or put piping into operation until it has been inspected and approved by authorities having jurisdiction.
   b. During installation, notify authorities having jurisdiction at least one day before inspection must be made. Perform tests specified below in presence of authorities having jurisdiction:

      1) Roughing-in Inspection: Arrange for inspection of piping before concealing or closing in after roughing in and before setting fixtures.
      2) Final Inspection: Arrange for authorities having jurisdiction to observe tests specified in "Piping Tests" Subparagraph below and to ensure compliance with requirements.

   c. Reinspection: If authorities having jurisdiction find that piping will not pass tests or inspections, make required corrections and arrange for reinspection.
   d. Reports: Prepare inspection reports and have them signed by authorities having jurisdiction.

2. Piping Tests:

   a. Fill domestic water piping. Check components to determine that they are not air bound and that piping is full of water.
   b. Test for leaks and defects in new piping and parts of existing piping that have been altered, extended, or repaired. If testing is performed in

segments, submit a separate report for each test, complete with diagram of portion of piping tested.

c. Leave new, altered, extended, or replaced domestic water piping uncovered and unconcealed until it has been tested and approved. Expose work that was covered or concealed before it was tested.
d. Cap and subject piping to static water pressure of 50 psig above operating pressure, without exceeding pressure rating of piping system materials. Isolate test source and allow it to stand for four hours. Leaks and loss in test pressure constitute defects that must be repaired.
e. Repair leaks and defects with new materials, and retest piping or portion thereof until satisfactory results are obtained.
f. Prepare reports for tests and for corrective action required.

B. Domestic water piping will be considered defective if it does not pass tests and inspections.

C. Prepare test and inspection reports.

3.10 ADJUSTING

A. Perform the following adjustments before operation:

1. Close drain valves, hydrants, and hose bibbs.
2. Open shutoff valves to fully open position.
3. Open throttling valves to proper setting.
4. Adjust balancing valves in hot-water-circulation return piping to provide adequate flow.

    a. Manually adjust ball-type balancing valves in hot-water-circulation return piping to provide hot-water flow in each branch.
    b. Adjust calibrated balancing valves to flows indicated.

5. Remove plugs used during testing of piping and for temporary sealing of piping during installation.
6. Remove and clean strainer screens. Close drain valves and replace drain plugs.
7. Remove filter cartridges from housings and verify that cartridges are as specified for application where used and are clean and ready for use.
8. Check plumbing specialties and verify proper settings, adjustments, and operation.

3.11 CLEANING

A. Clean and disinfect potable domestic water piping as follows:

1. Purge new piping and parts of existing piping that have been altered, extended, or repaired before using.
2. Use purging and disinfecting procedures prescribed by authorities having jurisdiction; if methods are not prescribed, use procedures described in either AWWA C651 or AWWA C652 or follow procedures described below:

    a. Flush piping system with clean, potable water until dirty water does not appear at outlets.
    b. Fill and isolate system according to either of the following:

        1) Fill system or part thereof with water/chlorine solution with at least 50 ppm of chlorine. Isolate with valves and allow to stand for 24 hours.
        2) Fill system or part thereof with water/chlorine solution with at least 200 ppm of chlorine. Isolate and allow to stand for three hours.

    c. Flush system with clean, potable water until no chlorine is in water coming from system after the standing time.
    d. Repeat procedures if biological examination shows contamination.
    e. Submit water samples in sterile bottles to authorities having jurisdiction.

B. Prepare and submit reports of purging and disinfecting activities. Include copies of water-sample approvals from authorities having jurisdiction.

C. Clean interior of domestic water piping system. Remove dirt and debris as work progresses.

3.12 PIPING SCHEDULE

A. Transition and special fittings with pressure ratings at least equal to piping rating may be used in applications below unless otherwise indicated.

B. Flanges and unions may be used for aboveground piping joints unless otherwise indicated.

C. Fitting Option: Extruded-tee connections and brazed joints may be used on aboveground copper tubing.

D. Under-building-slab, domestic water, building-service piping, NPS 3 (DN 80) and smaller, shall be the following:
    1. Type L Copper piping.

E. Aboveground domestic water piping, NPS 2 (DN 50) and smaller, shall be the following:
    1. Type L copper piping.

F. Aboveground domestic water piping, NPS 2-1/2 to NPS 4 (DN 65 to DN 100), shall be one of the following:
   1. Type L copper piping.

END OF SECTION

SECTION 22 13 16

SANITARY WASTE AND VENT PIPING

PART 1 - GENERAL

1.01 DESCRIPTION:

A. Provide sanitary waste and vent piping as indicated and in compliance with Contract Documents.

1.02 REFERENCES:

A. ASTM International (ASTM):

1. A53: Standard Specification for Pipe, Steel, Black and Hot-Dipped, Zinc-Coated, Welded and Seamless

2. A743: Standard Specification for Castings, Iron-Chromium, Iron-Chromium-Nickel, Corrosion Resistant, for General Application.

3. B306: Standard Specification for Copper Drainage Tube (DWV)

4. C32: Standard Specification for Sewer and Manhole Brick (Made from Clay or Shale)

5. C478: Standard Specification for Precast Reinforced Concrete Manhole Sections

6. D3350: Standard Specification for Polyethylene Plastics Pipe and Fittings Materials

7. F714: Standard Specification for Polyethylene (PE) Plastic Pipe (DR-PR) Based on Outside Diameter

B. Canadian Standards Association (CSA):

1. A257: Standards for Concrete Pipe and Manhole Sections

2. B70: Cast Iron Soil Pipe, Fittings, and Means of Joining

3. B182.2: PVC Sewer Pipe and Fittings (PSM Type)

4. B602: Mechanical Couplings for Drain, Waste and Vent Pipe and Sewer Pipe

5. B1800: Thermoplastic Nonpressure Piping

6. CAN3-S157: Strength Design in Aluminum

C. Underwriters Laboratories of Canada (ULC):

1. S115: Fire Tests of Fire Stop Systems

1.03 SUBMITTALS:

A. Submit the following shop drawings in accordance with Section 01 33 00.

B. Shop Drawings: Submit shop drawings for all products specified in this Section except pipe and fittings. Shop drawings are to include all components including but not limited to panel layout drawings, wiring diagrams with wire numbers, individual components within panel, motor shop drawing, etc.

C. Test Data: Submit the following test data prior to application for Substantial Performance.

1. Pipe leakage test sheets in accordance with Section 20 05 00.

2. A copy of the plumbing inspection certificate.

3. Any other start-up or test data specified in this Section.

1.04 QUALITY ASSURANCE:

A. Comply with the requirements specified in Section 01 43 00.

1.05 DELIVERY STORAGE AND HANDLING:

A. Comply with the requirements specified in Section 01 66 10.

PART 2 - PRODUCTS

2.01 PIPE, FITTINGS AND JOINTS:

A. Concrete: Circular bell and spigot pattern pipe and fittings with rubber gasket joints, to CAN/CSA A257 Series, produced by a member of the Ontario Concrete Pipe Association in a plant which is currently approved under the O.C.P.A. Plant Prequalification Program. Pipe to 375 mm (15 inch) diameter is to be non-reinforced Class 3. Pipe 450 mm (18 inch) diameter and larger is to be reinforced Class III.

B. PVC Sewer: Ipex "Ring-Tite" or Rehau "Duraloc" SDR28 (150 mm (6 inch) and below) or SDR 35 (200 mm (8 inch) and above) rigid , PVC hub and spigot pattern sewer pipe and fittings to CAN/CSA B182.2 with gasket joints assembled with Ipex or Rehau PVC pipe lubricant. Provide green coloured pipe for sanitary lines and white coloured pipe for storm lines.

C. PVC-DWV: Ipex System XFR rigid PVC drain, waste and vent pipe and fittings to CAN/CSA B181.2, complete with solvent weld joints, and, for dry fire barrier penetration, an approved donut type firestop conforming to ULC/CAN4-S115 M95.

D. Passive Under Slab Venting or Passive In Ground Venting: Perforated HDPE: ASTM D3350, SDR 32.5, 350 kPa, high density polyethylene, maximum allowable hoop stress 5,500 kPa at 23 degrees C. Polyethylene resins shall conform to Type PE 3408 or better. Protection shall be provided against ultraviolet light degradation using carbon black, not less than 2 percent well dispersed in the resin. Design Stress Rating: ASTM F714, 5,500 kPa hydrostatic. Pipe perforation pattern to comply with AAHSTO Class II at 3 holes at 120 degree spacing.

E. Copper- Solder Joint: Type DWV hard temper to ASTM B306, with forged copper solder type drainage fittings and 50 percent lead – 50 percent tin solder joints.

F. Cast Iron: Cast iron pipe, fittings and joints to CAN/CSA B70, couplings to CAN/CSA B602.

G. Copper-Grooved Coupling Joint: Type DWV hard temper to ASTM B306, with factory or site rolled grooved ends (with grooving rolls designed for copper) and Victaulic "Copper Connection" wrought copper or cast bronze fittings and Style 606 gasket type couplings or Tyco Grinnell Style 672.

H. Stainless Steel: Type 316 Schedule 10S, ASTM A743, factory or site roll grooved, complete with stainless steel grooved end fittings and, unless otherwise specified, Victaulic Style 489, Gruvlok 7400SS, Tyco Grinnell Style 472 or Shurjoint #SS-7stainless steel mechanical joint couplings with Grade M gaskets.

I. Galvanized Steel - Grooved Coupling Joint: Schedule 40 mild steel, galvanized, ASTM A53, factory or site rolled grooved, complete with Victaulic galvanized ductile iron grooved end fittings and, unless otherwise specified, Victaulic Style 77, Tyco Grinnell Style 707 or Gruvlok Style 7001 hot dip galvanized mechanical joint couplings with Grade M gaskets.

2.02 SHUT-OFF AND CHECK VALVES:

A. Shut-off Valves: Class 600, 4140 kPa (600 psi) WOG rated full port ball valves, each complete with a forged brass or bronze body, blowout-proof stem, chrome plated brass ball, solder or screwed ends as required, and removable lever handle. Where piping is insulated provide stem extensions to clear insulation. Acceptable products are:

1. Kitz Corporation Code 58 or Code 59

2. Toyo Valve Co. Fig. 5049A or Fig. 5044A

3. MAS B-3 or MAS B-4

4. NCI #SFP-600 or TFP-600 (Brass)

5. Nibco #S-585-70 or T-585-70 (Bronze)

6. Watts Water Technologies (Canada) Inc. #FBV-3C or FBVS-3C

B. Check Valves: Class 125, bronze, 1725 kPa (250 psi) WOG rated vertical lift check valve with solder or screwed ends as required, and, for horizontal piping, Class 150, bronze 2070 kPa (300 psi) WOG rated swing check valves with solder or screwed ends as follows:

1. Kitz Corporation Code 36 or Code 26

2. Nibco #T-480, S-480 or #T-433, S-433

3. Watts Water Technologies (Canada) Inc. #600 or B5000/B5001 (5000 series Class 125)

2.03 VENT STACK COVERS:

A. Thaler Model SJ-27, 304 stainless steel, 0.79 mm (22 gge), insulated, 457 mm (18 inches) high vent stack covers with removable caps and a factory applied asphalt primer coating on the top and bottom of the flange or approved equivalent.

2.04 CLEANOUTS:

A. Horizontal Piping: TY pipe fitting with an extra heavy brass plug screwed into the fitting.

B. Vertical Piping: Bronze or copper cleanout tees in copper piping, each complete with a bronze ferrule, and, for cast iron piping, epoxy coated cast iron cleanout tees, each gas and water-tight, complete with an ABS tapered thread plug. Acceptable cast iron cleanout tees are:

1. Zurn #Z-1445

2. Jay R. Smith #4510

3. Mifab #C1460

4. Watts Water Technologies (Canada) Inc. #CO-460

C. Urinal(s): Wall access cleanout assemblies, each complete with a tapered plug, threaded brass insert, urethane rubber seal, and polished stainless steel access cover with vandal proof stainless steel securing screw. Acceptable products are:

1. Zurn #Z-1666-1-VP

2. Jay R. Smith #SQ4-1819

3. Mifab #C1440-RD-6

4. Watts Water Technologies (Canada) Inc. #CO-440-RD-6

2.05 FLOOR CLEANOUT TERMINATIONS:

A. Baked epoxy coated cast iron terminations, each complete with a solid stainless steel gasketed access cover to suit the floor finish, a cleanout plug, and captive stainless steel securing hardware. Acceptable products are:

1. Zurn #ZS-1602-SP Series

2. Jay R. Smith #4020-SS-F-C Series

3. Mifab #C1000-R-3-34

4. Watts Water Technologies (Canada) Inc. #CO-1200-R-3-34

B. All cleanout terminations in areas with a tile or sheet vinyl finish are to be as above but with a square top in lieu of a round top. Refer to the Room Finish Schedule.

2.06 FLOOR DRAINS:

A. Coated cast iron body vandal proof screws, each complete with a 12 mm (1/2-inch) diameter trap primer connection, and each in accordance with Schedule 22 13 16-1.

B. All floor drains in areas with a tile or sheet vinyl finish are to be as above but with a square grate in lieu of a round grate. Refer to the Room Finish Schedule.

2.07 ROOF DRAINS: NOT USED

2.08 DRAINAGE TRENCH FRAMES AND GRATING:

A. Welded, hot dipped galvanized, 45 mm x 45 mm x 6.4 mm (1-3/4 inch x 1-3/4 inch x 1/4-inch) structural steel angle frame, 300 mm (12 inches) wide, with anchor straps and lengths as required, and vandal-proof baked epoxy coated ductile iron slotted grating in 600 mm (24 inches) long sections. Acceptable products are:

1. Zurn #12-HDG-DGE-VP

2. Jay R. Smith #2971-M-VP

3. Mifab #T1200F-4-6-13

4. Watts Water Technologies (Canada) Inc. # TD-910-B-4-6

2.09 TRENCH DRAINS:

A. Modular, radiused, pre-sloped, structural composite channel sections in 150 mm (6 inch) or 300 mm (12 inch) widths as indicated on the drawings, with interlocking overlocking joints, drain pipe connection outlets to suit the application, integral anchor tabs for grate anchoring and trench levelling, heavy duty structural steel angle frame and heavy duty

baked epoxy coated ductile iron slotted grates in 600 mm (24 inch) long sections. Refer to drawings for overall lengths and outlet connection points. Acceptable products are:

1. Zurn "Flow-Thru" system #Z-886-DGE-HD / Z-882-DGE-HD

2. Jay R. Smith #9819/9870-460 Series

2.10 TRENCH DRAIN CATCH BASINS:

A. Modular structural composite body 610 mm x 610 mm x 610 mm (24 inch x 24 inch x 24 inch) deep complete with anchoring tabs and integral heavy duty galvanized structural steel frame assembly, heavy duty baked epoxy coated ductile iron slotted grate with built in locking devices and lock bolts for securing in place. Acceptable products are:

1. Zurn #Z887-24-HDG-DGF

2. Jay R. Smith #9864 Series

2.11 INTERIOR CATCH BASIN FRAMES AND COVERS:

A. Heavy-duty, 610 mm (24") square, baked epoxy coated ductile iron, hinged slotted grate with galvanized steel frame and anchoring tabs. Acceptable products are:

1. Zurn #Z-723-HDG-DGF

2. Jay R. Smith #2982-M-GF

3. Mifab #T-1200-12-4-13

4. Watts Water Technologies (Canada) Inc. #TD-910-C-4-13

2.12 INTERIOR CATCH BASINS:

A. Heavy-duty, 508 mm (20 inch) square, single outlet catch basin, baked epoxy coated fabricated steel body, baked epoxy coated ductile iron hinged slotted grate with locking device, anchor flange and trap seal with cleanout. Acceptable products are:

1. Zurn #ZF-799-75-AF-TSC-VP

2. Jay R. Smith #8930-FC-HG-M-VP

3. Mifab #FD-1570-3M-4-T-VP

4. Watts Water Technologies (Canada) Inc. #FD-410-4-6-T-113M

2.13 BACKWATER VALVES:

A. Heat bonded powder epoxy coated cast iron in-line type, each complete with a bolted and gasketed cover, bronze flapper, extension, and stainless steel hardware. Acceptable products are:

1. Zurn #Z-1095-15-BV

2. Jay R. Smith #7022

3. Mifab #BV1200R

4. Watts Water Technologies (Canada) Inc. #BV-230-R

2.14 BACKWATER VALVES WITH ACCESS CHAMBER AND COVER:

A. Heat bonded powder epoxy coated cast iron in-line type, each complete with a bolted and gasketed cover, bronze flapper, and stainless steel hardware, coated steel access chamber with anchor flange, heavy duty checker plate steel secured access cover. Acceptable products are:

1. Zurn #Z-1095-HDCAH-K

2. Mifab #BV-1000 c/w BV-1280

3. Watts Water Technologies (Canada) Inc. #BV-240

2.15 BACKWATER VALVES- FLAPPER TYPE:

A. Heat bonded powder epoxy coated cast iron body with hub inlet and open outlet for installation at end of drainage line, bronze flapper, type, each complete with a bolted and gasketed cover, bronze flapper, stainless steel hardware. Acceptable products are:

1. Zurn #Z-1091-BV

2. Jay R. Smith #7070C

3. Mifab #BV1280

4. Watts Water Technologies (Canada) Inc. #BV-200-1/2

2.16 EXTERIOR CATCH BASINS:

Not Used.

2.17 EXTERIOR MANHOLES:

Not Used.

PART 3 - EXECUTION

3.01 UNDERGROUND MUNICIPAL SERVICE CONNECTION:

Not Used.

3.02 CONNECTION OF BUILDING WEEPER SYSTEM PIPING:

A. Provide all piping required to extend building weeper system piping into the building storm drainage piping system from the connection point(s) shown on the Drawings.

B. Provide all required sand settling pit piping.

3.03 PIPING INSTALLATION REQUIREMENTS:

A. Provide all required drainage and vent piping. Pipe, unless otherwise specified, is to be as follows:

1. For underground pipe outside the building - concrete or rigid PVC sewer pipe.

2. For underground pipe inside the building and to points 1500 mm (5 feet) outside the building lines - rigid PVC sewer pipe, minimum 100 mm (4 inch) diameter. All non-ferrous piping shall be changed to ferrous piping prior to entering the building. (i.e., changed before passing through basement floor or slab on grade).

3. For pipe inside the building and above ground in sizes to and including 65 mm (2-1/2 inch) diameter type DWV copper.

4. For pipe inside the building and above ground in sizes 75 mm (3 inch) diameter and larger - Cast iron pipe, fittings and joints to CAN/CSA B70, couplings to CAN/CSA B602 (Class 4000) except for drainage pump discharge pipe.

5. All drainage pump discharge piping, including shut-off and check valve connections, shall be - Type "DWV" copper with Victaulic "Copper Connection" or Gruvlok copper fittings and couplings, or 316 Schedule 10S stainless steel with Victaulic, Gruvlok or Shurjoint fittings and couplings.

6. For pipe inside the building and above ground in lieu of type DWV copper and cast iron, where permitted by governing Codes and Regulations - rigid PVC DWV.

B. Tracer Wire For PVC U/G Pipe: Prior to backfilling, secure light coloured plastic insulated #14 ga TW solid copper wire to the top of all buried PVC pipe secured to the top of the pipe with plastic type ties for the entire length of the pipe for pipe location tracing purposes. Terminate in a round or square non-metallic PVC floor box, flush mounted with a brass cover plate. Coil 450 mm (18 inches) of wire inside box.

C. For perforated HPDE pipe below structural slab, refer to contract drawing for bedding details

D. Lay pipes true to line and grade with bells upgrade. Fit sections together so that, when complete, the pipe has a smooth and uniform invert. Keep pipe thoroughly clean so that jointed compound will adhere. Inspect the pipe for defects before being lowered into the trench. Do not use defective pipe.

E. Unless otherwise specified, slope horizontal drainage piping above ground in sizes to and including 75 mm (3 inch) diameter 25 mm (1 inch) in 1.2 m (4 feet), and pipe 100 mm (4 inch) diameter and larger 25 mm (1 inch) in 2.4 m (8 feet).

F. Install and slope underground drainage piping to inverts or slopes indicated on the Drawings to facilitate straight and true gradients between the points shown. Verify available slopes before installing the pipes.

G. Unless otherwise specified, slope horizontal branches of vent piping down to the fixture or pipe to which they connect with a minimum pitch of 25 mm (1 inch) in 1.2 m (4 feet).

H. Extend vent stacks up through the roof generally where shown but with exact locations to suit site conditions. Terminate vent stacks 457 mm (18 inches) above the roof in vent stack covers.

I. Provide proper die-electric unions at connections between copper pipe and ferrous pipe or equipment.

3.04 SUPPLY OF VENT STACK COVERS:

A. Supply a properly sized vent stack cover for each vent stack penetrating the roof.

B. Hand the vent stack covers to the roofing trade at the site for installation and flashing into roof construction as part of the roofing work. Coordinate installation to ensure proper locations. Provide waterproofing caps over vent stacks.

3.05 INSTALLATION OF CLEANOUTS:

A. Provide cleanouts in drainage piping in locations as follows:

1. In the building drain or drains as close as possible to the inner face of the outside wall, and, if a building trap is installed, locate the cleanout on the downstream side of the building trap.

2. At or as close as practicable to the foot of each drainage stack.

3. At maximum 15 m (50 foot) intervals in horizontal pipe 100 mm (4 inch) diameter and smaller.

4. At maximum 30 m (100 foot) intervals in horizontal pipe larger than 100 mm (4 inch) diameter.

5. In the wall at each new urinal or bank of urinals in a washroom.

6. Wherever else shown on the Drawings.

B. Cleanouts are to be the same diameter as the pipe in piping to 100 mm (4 inch) diameter, and not less than 100 mm (4 inch) diameter in piping larger than 100 mm (4 inch) diameter.

C. Cleanouts in vertical piping are to be cleanout tees, cast iron in piping 75 mm (3 inch) diameter and larger, copper or bronze in piping smaller than 75 mm (3 inch) dia.

D. Cleanouts in horizontal piping are to be TY fittings with removable plugs.

E. Where cleanouts are concealed behind walls or partitions, install the cleanouts near the floor and so that the cover is within 25 mm (1 inch) of the finished face of the wall or partition.

3.06 INSTALLATION OF FLOOR CLEANOUT TERMINATIONS:

A. Where cleanouts occur in horizontal inaccessible underground piping, extend the cleanout TY fitting up to the floor and provide a cleanout termination set flush with the finished floor.

B. In waterproof floors, ensure that each cleanout termination is equipped with a flashing clamp device. Cleanout terminations are to suit the floor finish. Refer to Room Finish Schedules.

C. Where cleanout terminations occur in finished areas, confirm locations prior to rough-in and arrange piping to suit.

3.07 INSTALLATION OF FLOOR DRAINS:

A. Provide floor drains where shown on the Drawings.

B. Equip each drain with a trap.

C. In equipment rooms and similar areas, exactly locate floor drains to suit the location of mechanical equipment and equipment indirect drainage piping.

D. Confirm the exact location of drains prior to roughing in.

E. Temporarily plug floor drains during construction procedures. Remove plugs during final cleanup work and demonstrate free and clear operation of each drain. Replace any damaged grates.

3.08 INSTALLATION OF ROOF DRAINS: NOT USED

3.09 INSTALLATION OF DRAINAGE TRENCH FRAMES AND GRATING:

A. Supply frame and grating sections for drainage trench as shown.

B. Hand frames to the concrete trade forming and pouring the trenches. Ensure that frames are properly and accurately installed.

C. Install grates and secure in place.

3.10 INSTALLATION OF TRENCH DRAINS:

A. Provide pre-sloped sections of drainage channel where shown, and install so that top frames are level and plumb in relation to floor finishes. Provide accessories, traps, etc., as required.

B. Install in strict accordance with manufacturers' detailed instructions with continuous encasing concrete minimum of 102 mm (4 inch) surrounding trench.

C. Install grating and secure in place.

3.11 INSTALLATION OF TRENCH DRAIN CATCH BASINS:

A. Provide pre-sloped trench drain catch basins where shown, and install so that top frames are level and plumb in relation to floor finishes. Provide accessories, traps, etc., as required.

B. Install in strict accordance with manufacturers' detailed instructions with continuous encasing concrete minimum of 102 mm (4 inch) surrounding catch basin.

C. Install grating and secure in place.

3.12 INSTALLATION OF INTERIOR CATCH BASIN FRAME AND COVER

A. Supply frames and hinged grates for all interior catch basins where shown, and provide all sump inlet and outlet piping and accessories.

B. Hand frames to the concrete trade pouring the concrete sump, and coordinate installation of sump piping with the formwork installation.

C. Install grates and secure in place.

3.13 INSTALLATION OF INTERIOR CATCH BASINS:

A. Provide catch basins where shown, and install so that top frames are level and plumb in relation to floor finishes. Provide accessories, traps, etc., as required.

B. Hand frames to the concrete trade pouring the concrete sump, and coordinate installation of sump piping with the formwork installation.

C. Install grates and secure in place.

3.14 INSTALLATION OF BACKWATER VALVES:

A. Provide backwater valve(s) in drainage piping where shown on the Drawings and connect with piping as indicated.

B. Set the backwater valve assembly such that the cover is flush with the finished floor. Provide an extension piece if required due to the depth of the piping.

3.15 INSTALLATION OF EXTERIOR MANHOLES: NOT USED

3.16 INSTALLATION OF EXTERIOR CATCH BASINS: NOT USED

3.17 CLOSEOUT ACTIVITIES:

A. Provide in accordance with Section 01 77 00.

3.18 SCHEDULES:

Schedule 22 13 16-1					
Type and Description	**Zurn Model No.**	**Jay R. Smith Model No.**	**Mifab Model No.**	**Watts Water Technologies (Canada) Inc. Model No.**	**Remarks**
FD-1, floor drain unfinished areas, ductile iron strainer	**Z-509-DG**	**2130-M**	**F1340-Y-4**	**FD-340-Y-4**	**stand. or waterproof fl.**

END OF SECTION

SECTION 22 45 00

EMERGENCY PLUMBING FIXTURES

PART 1 - GENERAL

1.1 SUMMARY

A. Section Includes:
   1. Eye/face wash equipment.
   2. Water-tempering equipment.

1.2 ACTION SUBMITTALS

A. Product Data: For each type of product.

B. Shop Drawings:

   1. Include plans, elevations, sections, and mounting details.
   2. Include details of equipment assemblies. Indicate dimensions, weights, loads, required clearances, method of field assembly, components, and location and size of each field connection.
   3. Include diagrams for power, signal, and control wiring.

1.3 INFORMATIONAL SUBMITTALS

A. Product Certificates: Submit certificates of performance testing specified in "Source Quality Control" Article.

B. Field quality-control test reports.

1.4 CLOSEOUT SUBMITTALS

A. Operation and maintenance data.

PART 2 - PRODUCTS

2.1 PERFORMANCE REQUIREMENTS

A. Electrical Components, Devices, and Accessories: Listed and labeled as defined in NFPA 70, by a qualified testing agency, and marked for intended location and application.

B. ISEA Standard: Comply with ISEA Z358.1.

C. NSF Standard: Comply with NSF 61 and NSF 372, for fixture materials that will be in contact with potable water.

D. Regulatory Requirements: Comply with requirements in ICC A117.1,; Public Law 90-480, "Architectural Barriers Act"; and Public Law 101-336, "Americans with Disabilities Act"; for plumbing fixtures for people with disabilities.

2.2 EYE/FACE WASH EQUIPMENT

A. Standard, Wall Mounted, Plumbed Eye/Face Wash Units:

1. Manufacturers: Subject to compliance with requirements, provide products by one of the following:

    a. Bradley Corporation.
    b. Guardian Equipment Co.
    c. Haws Corporation.

2. Capacity: Not less than 3.0 gpm for at least 15 minutes.

3. Supply Piping: NPS 1/2 chrome-plated brass or stainless steel with flow regulator and stay-open control valve.
4. Control-Valve Actuator: Paddle.
5. Spray-Head Assembly: Two or four receptor-mounted spray heads.
6. Receptor: Chrome-plated brass or stainless-steel bowl.
7. Drain Piping:

    a. Size: NPS 1-1/4 minimum.
    b. Finish: Chrome-plated brass.
    c. Fittings: Receptor drain, P-trap, waste to wall, and wall flange complying with ASME A112.18.2/CSA B125.2.

8. Mounting: Wall.

2.3 WATER-TEMPERING EQUIPMENT

A. Hot- and Cold-Water, Water-Tempering Equipment:

1. Manufacturers: Subject to compliance with requirements, provide products by one of the following:

   a. Bradley Corporation.
   b. Guardian Equipment Co.
   c. Haws Corporation.
   d. Leonard Valve Company.
   e. WATTS.

2. Description: Factory-fabricated equipment with thermostatic mixing valve.

   a. Thermostatic Mixing Valve: Designed to provide 85 deg F tepid, potable water at emergency plumbing fixtures, to maintain temperature at plus or minus 5 deg F throughout required 15-minute test period, and in case of unit failure to continue cold-water flow, with union connections, controls, metal piping, and corrosion-resistant enclosure.
   b. Supply Connections: For hot and cold water.

2.4 SOURCE QUALITY CONTROL

A. Certify performance of emergency plumbing fixtures by independent testing organization acceptable to authorities having jurisdiction.

PART 3 - EXECUTION

3.1 INSTALLATION OF EMERGENCY PLUMBING FIXTURE

A. Assemble emergency plumbing fixture piping, fittings, control valves, and other components.

B. Install fixtures level and plumb.

C. Fasten fixtures to substrate.

D. Install shutoff valves in water-supply piping to fixtures, to facilitate maintenance of the equipment. Use ball or gate valve if specific type valve is not indicated. Install valves chained or locked in open position if permitted. Install valves in locations where they can easily be reached for operation. Comply with requirements for valves specified in Section 220523 "General Duty Valves for Plumbing Piping."

1. Exception: Omit shutoff valve on supply to group of plumbing fixtures that includes emergency equipment.
2. Exception: Omit shutoff valve on supply to emergency equipment if prohibited by authorities having jurisdiction.

E. Install dielectric fitting in supply piping to emergency equipment if piping and equipment connections are made of different metals. Comply with requirements for dielectric fittings specified in Section 221116 "Domestic Water Piping."

F. Install thermometers in supply and outlet piping connections to water-tempering equipment. Comply with requirements for thermometers specified in Section 220519 "Meters and Gages for Plumbing Piping."

G. Install trap and waste piping on drain outlet of emergency equipment receptors that are indicated to be directly connected to drainage system. Comply with requirements for waste piping specified in Section 221316 "Sanitary Waste and Vent Piping."

H. Install escutcheons on piping wall and ceiling penetrations in exposed, finished locations.

I. Fill self-contained fixtures with flushing fluid.

3.2 CONNECTIONS

A. Connect cold-water-supply piping to plumbed emergency plumbing fixtures not having water-tempering equipment. Comply with requirements for cold-water piping specified in Section 221116 "Domestic Water Piping."

B. Connect hot- and cold-water-supply piping to hot- and cold-water, water-tempering equipment. Connect output from water-tempering equipment to emergency plumbing fixtures. Comply with requirements for hot- and cold-water piping specified in Section 221116 "Domestic Water Piping."

C. Directly connect emergency plumbing fixture receptors with trapped drain outlet to sanitary waste and vent piping. Comply with requirements for waste piping specified in Section 221316 "Sanitary Waste and Vent Piping."

D. Where installing piping adjacent to emergency plumbing fixtures, allow space for service and maintenance of fixtures.

3.3 IDENTIFICATION

A. Install equipment nameplates or equipment markers on emergency plumbing fixtures and equipment and equipment signs on water-tempering equipment.

3.4 FIELD QUALITY CONTROL

A. Mechanical-Component Testing: After plumbing connections have been made, test for compliance with requirements. Verify ability to achieve indicated capacities.

B. Tests and Inspections:

1. Perform each visual and mechanical inspection.
2. Leak Test: After installation, charge system and test for leaks. Repair leaks and retest until no leaks exist.
3. Operational Test: After electrical circuitry has been energized, start units to confirm proper unit operation.
4. Test and adjust controls and safeties. Replace damaged and malfunctioning controls and equipment.

C. Emergency plumbing fixtures and water-tempering equipment will be considered defective if they do not pass tests and inspections.

D. Prepare test and inspection reports.

3.5 ADJUSTING

A. Adjust or replace fixture flow regulators for proper flow.

B. Adjust equipment temperature settings.

END OF SECTION

SECTION 23 05 13

COMMON MOTOR REQUIREMENTS FOR HVAC EQUIPMENT

PART 1 - GENERAL

1.1 SUMMARY

A. Section includes general requirements for single-phase and polyphase, general-purpose, horizontal, small and medium, squirrel-cage induction motors for use on ac power systems up to 600 V and installed at equipment manufacturer's factory or shipped separately by equipment manufacturer for field installation.

1.2 COORDINATION

A. Coordinate features of motors, installed units, and accessory devices to be compatible with the following:

1. Motor controllers.

2. Torque, speed, and horsepower requirements of the load.

3. Ratings and characteristics of supply circuit and required control sequence.

4. Ambient and environmental conditions of installation location.

PART 2 - PRODUCTS

2.1 GENERAL MOTOR REQUIREMENTS

A. Comply with NEMA MG 1 unless otherwise indicated.

2.2 MOTOR CHARACTERISTICS

A. Duty: Continuous duty at ambient temperature of 40 deg C and at altitude of 5300 feet above sea level.

B. Capacity and Torque Characteristics: Sufficient to start, accelerate, and operate connected loads at designated speeds, at installed altitude and environment, with indicated operating sequence, and without exceeding nameplate ratings or considering service factor.

2.3 POLYPHASE MOTORS

A. Description: NEMA MG 1, Design B, medium induction motor.

B. Efficiency: Energy efficient, as defined in NEMA MG 1.

C. Service Factor: 1.15.

D. Multispeed Motors: Variable torque.

1. For motors with 2:1 speed ratio, consequent pole, single winding.

2. For motors with other than 2:1 speed ratio, separate winding for each speed.

E. Rotor: Random-wound, squirrel cage.

F. Bearings: Regreasable, shielded, antifriction ball bearings suitable for radial and thrust loading.

G. Temperature Rise: Match insulation rating.

H. Insulation: Class F.

I. Code Letter Designation:

1. Motors 15 HP and Larger: NEMA starting Code F or Code G.

2. Motors Smaller than 15 HP: Manufacturer's standard starting characteristic.

J. Enclosure Material: Cast iron for motor frame sizes 324T and larger; rolled steel for motor frame sizes smaller than 324T.

2.4 POLYPHASE MOTORS WITH ADDITIONAL REQUIREMENTS

A. Motors Used with Reduced-Voltage and Multispeed Controllers: Match wiring connection requirements for controller with required motor leads. Provide terminals in motor terminal box, suited to control method.

B. Motors Used with Variable Frequency Controllers: Ratings, characteristics, and features coordinated with and approved by controller manufacturer.

1. Windings: Copper magnet wire with moisture-resistant insulation varnish, designed and tested to resist transient spikes, high frequencies, and short time rise pulses produced by pulse-width modulated inverters.

2. Energy- and Premium-Efficient Motors: Class B temperature rise; Class F insulation.

3. Inverter-Duty Motors: Class F temperature rise; Class H insulation.

4. Thermal Protection: Comply with NEMA MG 1 requirements for thermally protected motors.

2.5 SINGLE-PHASE MOTORS

A. Motors larger than 1/20 hp shall be one of the following, to suit starting torque and requirements of specific motor application:

1. Permanent-split capacitor.

2. Split phase.

3. Capacitor start, inductor run.

4. Capacitor start, capacitor run.

B. Multispeed Motors: Variable-torque, permanent-split-capacitor type.

C. Bearings: Prelubricated, antifriction ball bearings or sleeve bearings suitable for radial and thrust loading.

D. Motors 1/20 HP and Smaller: Shaded-pole type.

E. Thermal Protection: Internal protection to automatically open power supply circuit to motor when winding temperature exceeds a safe value calibrated to temperature rating of motor insulation. Thermal-protection device shall automatically reset when motor temperature returns to normal range.

PART 3 - EXECUTION

NOT USED

END OF SECTION

SECTION 23 05 29

HANGERS AND SUPPORTS FOR HVAC PIPING AND EQUIPMENT

PART 1 - GENERAL

1.1 SUMMARY

A. Section Includes:

1. Metal pipe hangers and supports.
2. Trapeze pipe hangers.
3. Thermal-hanger shield inserts.
4. Fastener systems.
5. Equipment supports.

1.2 PERFORMANCE REQUIREMENTS

A. Delegated Design: Design trapeze pipe hangers and equipment supports, including comprehensive engineering analysis by a qualified professional engineer, using performance requirements and design criteria indicated.

B. Structural Performance: Hangers and supports for HVAC piping and equipment shall withstand the effects of gravity loads and stresses within limits and under conditions indicated according to ASCE/SEI 7.

1. Design supports for multiple pipes capable of supporting combined weight of supported systems, system contents, and test water.
2. Design equipment supports capable of supporting combined operating weight of supported equipment and connected systems and components.

1.3 ACTION SUBMITTALS

A. Product Data: For each type of product indicated.

B. Shop Drawings: Signed and sealed by a qualified professional engineer. Show fabrication and installation details and include calculations for the following; include Product Data for components:

1. Trapeze pipe hangers.
2. Equipment supports.

C. Delegated-Design Submittal: For trapeze hangers indicated to comply with performance requirements and design criteria, including analysis data signed and sealed by the qualified professional engineer responsible for their preparation.

1.4 INFORMATIONAL SUBMITTALS

A. Welding certificates.

1.5 QUALITY ASSURANCE

A. Structural Steel Welding Qualifications: Qualify procedures and personnel according to AWS D1.1/D1.1M, "Structural Welding Code - Steel."

B. Pipe Welding Qualifications: Qualify procedures and operators according to ASME Boiler and Pressure Vessel Code.

PART 2 - PRODUCTS

2.1 METAL PIPE HANGERS AND SUPPORTS

A. Carbon-Steel Pipe Hangers and Supports:

1. Description: MSS SP-58, Types 1 through 58, factory-fabricated components.
2. Galvanized Metallic Coatings: Pregalvanized or hot dipped.
3. Nonmetallic Coatings: Plastic coating, jacket, or liner.
4. Padded Hangers: Hanger with fiberglass or other pipe insulation pad or cushion to support bearing surface of piping.
5. Hanger Rods: Continuous-thread rod, nuts, and washer made of carbon steel.

B. Copper Pipe Hangers:

1. Description: MSS SP-58, Types 1 through 58, copper-coated-steel, factory-fabricated components.
2. Hanger Rods: Continuous-thread rod, nuts, and washer made of copper-coated steel.

2.2 TRAPEZE PIPE HANGERS

A. Description: MSS SP-69, Type 59, shop- or field-fabricated pipe-support assembly made from structural carbon-steel shapes with MSS SP-58 carbon-steel hanger rods, nuts, saddles, and U-bolts.

2.3 THERMAL-HANGER SHIELD INSERTS

A. Insulation-Insert Material for Cold Piping: ASTM C 552, Type II cellular glass with 100-psig minimum compressive strength and vapor barrier.

B. For Trapeze or Clamped Systems: Insert and shield shall cover entire circumference of pipe.

C. For Clevis or Band Hangers: Insert and shield shall cover lower 180 degrees of pipe.

D. Insert Length: Extend 2 inches beyond sheet metal shield for piping operating below ambient air temperature.

2.4 FASTENER SYSTEMS

A. Powder-Actuated Fasteners: Threaded-steel stud, for use in hardened portland cement concrete with pull-out, tension, and shear capacities appropriate for supported loads and building materials where used.

B. Mechanical-Expansion Anchors: Insert-wedge-type, stainless- steel anchors, for use in hardened portland cement concrete; with pull-out, tension, and shear capacities appropriate for supported loads and building materials where used.

2.5 EQUIPMENT SUPPORTS

A. Description: Welded, shop- or field-fabricated equipment support made from structural carbon-steel shapes.

2.6 MISCELLANEOUS MATERIALS

A. Structural Steel: ASTM A 36/A 36M, carbon-steel plates, shapes, and bars; black and galvanized.

B. Grout: ASTM C 1107, factory-mixed and -packaged, dry, hydraulic-cement, nonshrink and nonmetallic grout; suitable for interior and exterior applications.

1. Properties: Nonstaining, noncorrosive, and nongaseous.
2. Design Mix: 5000-psi, 28-day compressive strength.

PART 3 - EXECUTION

3.1 HANGER AND SUPPORT INSTALLATION

A. Metal Pipe-Hanger Installation: Comply with MSS SP-69 and MSS SP-89. Install hangers, supports, clamps, and attachments as required to properly support piping from the building structure.

B. Metal Trapeze Pipe-Hanger Installation: Comply with MSS SP-69 and MSS SP-89. Arrange for grouping of parallel runs of horizontal piping, and support together on field-fabricated trapeze pipe hangers.

1. Pipes of Various Sizes: Support together and space trapezes for smallest pipe size or install intermediate supports for smaller diameter pipes as specified for individual pipe hangers.
2. Field fabricate from ASTM A 36/A 36M, carbon-steel shapes selected for loads being supported. Weld steel according to AWS D1.1/D1.1M.

C. Thermal-Hanger Shield Installation: Install in pipe hanger or shield for insulated piping.

D. Fastener System Installation:

1. Install powder-actuated fasteners for use in lightweight concrete or concrete slabs less than 4 inches thick in concrete after concrete is placed and completely cured. Use operators that are licensed by powder-actuated tool manufacturer. Install fasteners according to powder-actuated tool manufacturer's operating manual.
2. Install mechanical-expansion anchors in concrete after concrete is placed and completely cured. Install fasteners according to manufacturer's written instructions.

E. Install hangers and supports complete with necessary attachments, inserts, bolts, rods, nuts, washers, and other accessories.

F. Equipment Support Installation: Fabricate from welded-structural-steel shapes.

G. Install hangers and supports to allow controlled thermal and seismic movement of piping systems, to permit freedom of movement between pipe anchors, and to facilitate action of expansion joints, expansion loops, expansion bends, and similar units.

H. Install lateral bracing with pipe hangers and supports to prevent swaying.

I. Install building attachments within concrete slabs or attach to structural steel. Install additional attachments at concentrated loads, including valves, flanges, and strainers, NPS 2-1/2 and larger and at changes in direction of piping. Install concrete inserts before concrete is placed; fasten inserts to forms and install reinforcing bars through openings at top of inserts.

J. Load Distribution: Install hangers and supports so that piping live and dead loads and stresses from movement will not be transmitted to connected equipment.

K. Pipe Slopes: Install hangers and supports to provide indicated pipe slopes and to not exceed maximum pipe deflections allowed by ASME B31.9 for building services piping.

L. Insulated Piping:

1. Attach clamps and spacers to piping.

    a. Piping Operating above Ambient Air Temperature: Clamp may project through insulation.
    b. Piping Operating below Ambient Air Temperature: Use thermal-hanger shield insert with clamp sized to match OD of insert.
    c. Do not exceed pipe stress limits allowed by ASME B31.9 for building services piping.

2. Install MSS SP-58, Type 39, protection saddles if insulation without vapor barrier is indicated. Fill interior voids with insulation that matches adjoining insulation.

    a. Option: Thermal-hanger shield inserts may be used. Include steel weight-distribution plate for pipe NPS 4 and larger if pipe is installed on rollers.

3. Install MSS SP-58, Type 40, protective shields on cold piping with vapor barrier. Shields shall span an arc of 180 degrees.

    a. Option: Thermal-hanger shield inserts may be used. Include steel weight-distribution plate for pipe NPS 4 and larger if pipe is installed on rollers.

4. Shield Dimensions for Pipe: Not less than the following:

    a. NPS 1/4 to NPS 3-1/2: 12 inches long and 0.048 inch thick.
    b. NPS 4: 12 inches long and 0.06 inch thick.
    c. NPS 5 and NPS 6: 18 inches long and 0.06 inch thick.
    d. NPS 8 to NPS 14: 24 inches long and 0.075 inch thick.
    e. NPS 16 to NPS 24: 24 inches long and 0.105 inch thick.

5. Pipes NPS 8 and Larger: Include wood or reinforced calcium-silicate-insulation inserts of length at least as long as protective shield.
6. Thermal-Hanger Shields: Install with insulation same thickness as piping insulation.

3.2 EQUIPMENT SUPPORTS

A. Fabricate structural-steel stands to suspend equipment from structure overhead or to support equipment above floor.

B. Grouting: Place grout under supports for equipment and make bearing surface smooth.

C. Provide lateral bracing, to prevent swaying, for equipment supports.

3.3 METAL FABRICATIONS

A. Cut, drill, and fit miscellaneous metal fabrications for trapeze pipe hangers and equipment supports.

B. Fit exposed connections together to form hairline joints. Field weld connections that cannot be shop welded because of shipping size limitations.

C. Field Welding: Comply with AWS D1.1/D1.1M procedures for shielded, metal arc welding; appearance and quality of welds; and methods used in correcting welding work; and with the following:

1. Use materials and methods that minimize distortion and develop strength and corrosion resistance of base metals.
2. Obtain fusion without undercut or overlap.
3. Remove welding flux immediately.
4. Finish welds at exposed connections so no roughness shows after finishing and so contours of welded surfaces match adjacent contours.

3.4 ADJUSTING

A. Hanger Adjustments: Adjust hangers to distribute loads equally on attachments and to achieve indicated slope of pipe.

B. Trim excess length of continuous-thread hanger and support rods to 1-1/2 inches

3.5 PAINTING

A. Touchup: Clean field welds and abraded areas of shop paint. Paint exposed areas immediately after erecting hangers and supports. Use same materials as used for shop painting. Comply with SSPC-PA 1 requirements for touching up field-painted surfaces.

1. Apply paint by brush or spray to provide a minimum dry film thickness of 2.0 mils.

B. Touchup: Cleaning and touchup painting of field welds, bolted connections, and abraded areas of shop paint on miscellaneous metal are specified in Section 099010.

C. Galvanized Surfaces: Clean welds, bolted connections, and abraded areas and apply galvanizing-repair paint to comply with ASTM A 780.

3.6 HANGER AND SUPPORT SCHEDULE

A. Specific hanger and support requirements are in Sections specifying piping systems and equipment.

B. Comply with MSS SP-69 for pipe-hanger selections and applications that are not specified in piping system Sections.

C. Use hangers and supports with galvanized metallic coatings for piping and equipment that will not have field-applied finish.

D. Use nonmetallic coatings on attachments for electrolytic protection where attachments are in direct contact with copper tubing.

E. Use carbon-steel pipe hangers and supports and metal trapeze pipe hangers and attachments for general service applications.

F. Use stainless-steel pipe hangers and stainless-steel attachments for hostile environment applications.

G. Use copper-plated pipe hangers and copper attachments for copper piping and tubing.

H. Use padded hangers for piping that is subject to scratching.

I. Use thermal-hanger shield inserts for insulated piping and tubing.

J. Horizontal-Piping Hangers and Supports: Unless otherwise indicated and except as specified in piping system Sections, install the following types:

1. Adjustable, Steel Clevis Hangers (MSS Type 1): For suspension of noninsulated or insulated, stationary pipes NPS 1/2 to NPS 30.
2. Yoke-Type Pipe Clamps (MSS Type 2): For suspension of up to 1050 deg F, pipes NPS 4 to NPS 24, requiring up to 4 inches of insulation.
3. Carbon- or Alloy-Steel, Double-Bolt Pipe Clamps (MSS Type 3): For suspension of pipes NPS 3/4 to NPS 36, requiring clamp flexibility and up to 4 inches of insulation.
4. Adjustable, Steel Band Hangers (MSS Type 7): For suspension of noninsulated, stationary pipes NPS 1/2 to NPS 8.
5. U-Bolts (MSS Type 24): For support of heavy pipes NPS 1/2 to NPS 30.
6. Pipe Saddle Supports (MSS Type 36): For support of pipes NPS 4 to NPS 36, with steel-pipe base stanchion support and cast-iron floor flange or carbon-steel plate.
7. Pipe Stanchion Saddles (MSS Type 37): For support of pipes NPS 4 to NPS 36, with steel-pipe base stanchion support and cast-iron floor flange or carbon-steel plate, and with U-bolt to retain pipe.
8. Single-Pipe Rolls (MSS Type 41): For suspension of pipes NPS 1 to NPS 30, from two rods if longitudinal movement caused by expansion and contraction might occur.
9. Complete Pipe Rolls (MSS Type 44): For support of pipes NPS 2 to NPS 42 if longitudinal movement caused by expansion and contraction might occur but vertical adjustment is not necessary.

K. Vertical-Piping Clamps: Unless otherwise indicated and except as specified in piping system Sections, install the following types:

1. Extension Pipe or Riser Clamps (MSS Type 8): For support of pipe risers NPS 3/4 to NPS 24.
2. Carbon- or Alloy-Steel Riser Clamps (MSS Type 42): For support of pipe risers NPS 3/4 to NPS 24 if longer ends are required for riser clamps.

L. Hanger-Rod Attachments: Unless otherwise indicated and except as specified in piping system Sections, install the following types:

1. Steel Turnbuckles (MSS Type 13): For adjustment up to 6 inches for heavy loads.
2. Steel Clevises (MSS Type 14): For 120 to 450 deg F piping installations.

M. Building Attachments: Unless otherwise indicated and except as specified in piping system Sections, install the following types:

1. Steel or Malleable Concrete Inserts (MSS Type 18): For upper attachment to suspend pipe hangers from concrete ceiling.
2. Top-Beam C-Clamps (MSS Type 19): For use under roof installations with bar-joist construction, to attach to top flange of structural shape.
3. Side-Beam or Channel Clamps (MSS Type 20): For attaching to bottom flange of beams, channels, or angles.
4. Center-Beam Clamps (MSS Type 21): For attaching to center of bottom flange of beams.
5. Welded Beam Attachments (MSS Type 22): For attaching to bottom of beams if loads are considerable and rod sizes are large.
6. C-Clamps (MSS Type 23): For structural shapes.

7. Welded-Steel Brackets: For support of pipes from below, or for suspending from above by using clip and rod. Use one of the following for indicated loads:

    a. Light (MSS Type 31): 750 lb.
    b. Medium (MSS Type 32): 1500 lb.
    c. Heavy (MSS Type 33): 3000 lb.

8. Side-Beam Brackets (MSS Type 34): For sides of steel or wooden beams.
9. Plate Lugs (MSS Type 57): For attaching to steel beams if flexibility at beam is required.

N. Saddles and Shields: Unless otherwise indicated and except as specified in piping system Sections, install the following types:

1. Steel-Pipe-Covering Protection Saddles (MSS Type 39): To fill interior voids with insulation that matches adjoining insulation.
2. Protection Shields (MSS Type 40): Of length recommended in writing by manufacturer to prevent crushing insulation.
3. Thermal-Hanger Shield Inserts: For supporting insulated pipe.

O. Spring Hangers and Supports: Unless otherwise indicated and except as specified in piping system Sections, install the following types:

1. Spring Cushions (MSS Type 48): For light loads if vertical movement does not exceed 1-1/4 inches.
2. Spring-Cushion Roll Hangers (MSS Type 49): For equipping Type 41, roll hanger with springs.
3. Variable-Spring Base Supports (MSS Type 52): Preset to indicated load and limit variability factor to 25 percent to allow expansion and contraction of piping system from base support.

P. Comply with MSS SP-69 for trapeze pipe-hanger selections and applications that are not specified in piping system Sections.

END OF SECTION

SECTION 23 05 48

VIBRATION CONTROLS FOR HVAC PIPING AND EQUIPMENT

PART 1 - GENERAL

1.1 SUMMARY

A. This Section includes the following:

1. Isolation pads.
2. Isolation mounts.
3. Restrained elastomeric isolation mounts.
4. Freestanding spring isolators.
5. Housed spring mounts.
6. Elastomeric hangers.
7. Spring hangers.
8. Spring hangers with vertical-limit stops.
9. Pipe riser resilient supports.
10. Resilient pipe guides.
11. Restraining braces and cables.

1.2 ACTION SUBMITTALS

A. Product Data: For each product indicated.

1.3 INFORMATIONAL SUBMITTALS

A. Qualification Data: For professional engineer.

B. Welding certificates.

C. Field quality-control test reports.

1.4 QUALITY ASSURANCE

A. Welding: Qualify procedures and personnel according to AWS D1.1/D1.1M, "Structural
Welding Code - Steel."

PART 2 - PRODUCTS

2.1 VIBRATION ISOLATORS

A. Available Manufacturers: Subject to compliance with requirements, manufacturers offering products that may be incorporated into the Work include, but are not limited to, the following:

B. Manufacturers: Subject to compliance with requirements, provide products by one of the following:

1. Ace Mountings Co., Inc.
2. Amber/Booth Company, Inc.
3. California Dynamics Corporation.
4. Isolation Technology, Inc.
5. Kinetics Noise Control.
6. Mason Industries.
7. Vibration Eliminator Co., Inc.
8. Vibration Isolation.
9. Vibration Mountings & Controls, Inc.

C. Pads: Arranged in single or multiple layers of sufficient stiffness for uniform loading over pad
area, molded with a nonslip pattern and galvanized-steel baseplates, and factory cut to sizes that
match requirements of supported equipment.

1. Resilient Material: Oil- and water-resistant neoprene.

D. Mounts: Double-deflection type, with molded, oil-resistant rubber, hermetically sealed compressed fiberglass, or neoprene isolator elements with factory-drilled, encapsulated top plate for bolting to equipment and with baseplate for bolting to structure. Color-code or otherwise identify to indicate capacity range.

1. Materials: Cast-ductile-iron or welded steel housing containing two separate and opposing, oil-resistant rubber or neoprene elements that prevent central threaded element and attachment hardware from contacting the housing during normal operation.
2. Neoprene: Shock-absorbing materials compounded according to the standard for bridge-bearing neoprene as defined by AASHTO.

E. Spring Hangers with Vertical-Limit Stop: Combination coil-spring and elastomeric-insert hanger with spring and insert in compression and with a vertical-limit stop.

1. Frame: Steel, fabricated for connection to threaded hanger rods and to allow for a maximum of 30 degrees of angular hanger-rod misalignment without binding or

reducing isolation efficiency.

2. Outside Spring Diameter: Not less than 80 percent of the compressed height of the spring at rated load.

3. Minimum Additional Travel: 50 percent of the required deflection at rated load.

4. Lateral Stiffness: More than 80 percent of rated vertical stiffness.

5. Overload Capacity: Support 200 percent of rated load, fully compressed, without deformation or failure.

6. Elastomeric Element: Molded, oil-resistant rubber or neoprene.

7. Adjustable Vertical Stop: Steel washer with neoprene washer "up-stop" on lower threaded rod.

8. Self-centering hanger rod cap to ensure concentricity between hanger rod and support
spring coil.

PART 3 - EXECUTION

3.1 VIBRATION-CONTROL DEVICE INSTALLATION

A. Equipment Restraints:

1. Install resilient bolt isolation washers on equipment anchor bolts where clearance between anchor and adjacent surface exceeds 0.125 inch (3.2 mm).

B. Piping Restraints:

1. Comply with requirements in MSS SP-127.

2. Space lateral supports a maximum of 40 feet (12 m) o.c., and longitudinal supports a maximum of o.c.

3. Brace a change of direction longer than 12 feet (3.7 m).

C. Install cables so they do not bend across edges of adjacent equipment or building structure.

D. Install bushing assemblies for anchor bolts for floor-mounted equipment, arranged to provide resilient media between anchor bolt and mounting hole in concrete base.

E. Attachment to Structure: If specific attachment is not indicated, anchor bracing to structure at flanges of beams, at upper truss chords of bar joists, or at concrete members.

F. Drilled-in Anchors:

1. Identify position of reinforcing steel and other embedded items prior to drilling holes for anchors. Do not damage existing reinforcing or embedded items during coring or drilling. Notify the structural engineer if reinforcing steel or other embedded items are encountered during drilling. Locate and avoid prestressed tendons, electrical and telecommunications conduit, and gas lines.

2. Do not drill holes in concrete or masonry until concrete, mortar, or grout has achieved full design strength.

3. Wedge Anchors: Protect threads from damage during anchor installation. Heavy-duty sleeve anchors shall be installed with sleeve fully engaged in the structural element to which anchor is to be fastened.

4. Set anchors to manufacturer's recommended torque, using a torque wrench.

5. Install zinc-coated steel anchors for interior and stainless-steel anchors for exterior applications.

3.2 FIELD QUALITY CONTROL

A. Perform tests and inspections.

3.3 ADJUSTING

A. Adjust isolators after piping system is at operating weight.

B. Adjust limit stops on restrained spring isolators to mount equipment at normal operating height. After equipment installation is complete, adjust limit stops so they are out of contact during normal operation.

C. Adjust active height of spring isolators.

D. Adjust restraints to permit free movement of equipment within normal mode of operation.

3.4 HVAC VIBRATION-CONTROL DEVICE SCHEDULE

A. Supported Equipment:

1. Pads: Indoor equipment.

2. Mounts: Outdoor equipment.

B. Suspended Equipment:

1. Spring Hangers with Vertical-Limit Stop.

END OF SECTION

SECTION 23 05 93

PRESSURE TESTING OF DUCTED AIR SYSTEMS

PART 1 - GENERAL

1.01 DESCRIPTION:

A. Provide pressure testing of ducted air systems as indicated and in compliance with Contract Documents.

1.02 REFERENCES:

A. Sheet Metal and Air Conditioning Contractors' National Association (SMACNA):

1. ANSI/SMACNA HVAC Air Duct Leakage Test Manual – second edition 2012.

1.03 GENERAL:

A. Ducts over 5 m in length, forming part of a supply forming part of a supply, return or exhaust ductwork system directly or indirectly connected to air handling equipment to be pressure tested for leaks

1.04 TIMING:

A. Ducts to be tested before installation of insulation or any other form of concealments.

B. Test after seals have cured.

C. Test when ambient temperature will not affect effectiveness of seals, gaskets, etc.

1.05 EXCLUSIONS:

A. Flexible connections to VAV boxes.

1.06 SUBMITTALS:

A. Submit the following shop drawings in accordance with Section 01 33 00.

1.07 QUALITY ASSURANCE:

A. Comply with the requirements specified in Section 01 43 00.

1.08 DELIVERY STORAGE AND HANDLING:

A. Comply with the requirements specified in Section 01 66 10.

1.09 TEST PROCEDURES:

A. Maximum lengths of ducts to be tested to be consistent with capacity of test equipment.

B. Section of duct to be tested to include:

1. Main ducts, fittings, branch ducts, tap-ins.

C. No less than 25 percent of all ductwork shall be tested at a test pressure of 1500 pa (6-inch w.g). If a single test result is “pass” then no additional testing shall be required. If a single test result is “fail” then additional leak testing shall be performed on 50 percent of all ductwork. If the test result is “pass” then no additional testing shall be required. If the second test result is “fail” then all 100 percent of ductwork shall be tested.

D. Consultant shall randomly select duct work sections to be tested.

E. System leakage tolerances shall adhere to Paragraph F below.

F. Acceptable Leakage shall be calculated based on the following criteria:

1. Rectangular Metal Ductwork: Leakage Class 4.

2. Round Metal Ductwork: Leakage Class 2.

3. All ductwork to be Seal Class A.

G. The equipment used shall be of sufficient capacity to perform the test. Extrapolation shall not be permitted.

1. All ductwork shall be tested prior to the installation of dampers, grilles, registers, coils, openings, etc. that could cause a failure in the pressure test. Sections of ductwork shall be completely replaced where this occurs prior to the passing of the leakage testing.

H. Base partial system leakage calculations on Reference Standard.

I. Seal leaks that can be heard or felt, regardless of their contribution to total leakage.

1.10 TESTING AGENCY:

A. Installing Contractor.

1.11 VERIFICATION:

A. Consultant to witness tests and to verify reported results.

B. To be certified by the same TAB agency approved by Consultant to undertake TAB on this project.

1.12 TEST INSTRUMENTS:

A. Agency to provide instruments for tests.

B. Test apparatus to include:

1. Fan capable of producing required static pressure.

2. Duct section with calibrated orifice plate mounted and accurately located pressure taps.

3. Flow measuring instrument compatible with the orifice plate.

4. Calibration curves for orifice plates used.

5. Flexible duct for connecting to ductwork under test.

6. Smoke bombs for visual inspections.

C. Test apparatus to be accurate to within +/- 3 percent of flow rate and pressure.

D. Submit details of test instruments to be used to Consultant at least three months before anticipated start date.

E. Test instruments to be calibrated and certificate of calibration deposited with Consultant no more than 28 days before start of tests.

F. Instruments to be re-calibrated every six months thereafter.

1.13 SYSTEM LEAKAGE TOLERANCES:

A. System leakage tolerances specified herein are stated as a percentage of total flow rate handled by the system. Therefore, when testing sections of ductwork this acceptable leakage shall be pro-rated to entire system. Leakage for sections of duct systems shall not exceed the total allowable leakage.

B. Leakage tests on following systems not to exceed specified leakage rates.

1. Rectangular ductwork leakage Class 4.

2. Round ductwork leakage Class 2.

3. All ductwork to be test to duct class 1500 Pa (6 inch wg), Class “A”.

C. Evaluation of test results to use surface area of duct and pressure in duct as basic parameters.

1.14 EQUIPMENT LEAKAGE TOLERANCES:

A. Equipment and system components, Leakage: 2 percent.

1.15 REPORT FORMS:

A. Submit proposed report form and test report format to Consultant for approval at least three months before proposed date of first series of tests. Do not start tests until approval received in writing from Consultant.

1.16 PRESSURE TEST REPORTS:

A. Prepare report of results and submit to Consultant within 24 hours of completion of tests. Include:

1. Schematic of entire system.

2. Schematic of section under test showing test site.

3. Required and achieved static pressures.

4. Orifice differential pressure at test sites.

5. Permissible and actual leakage flow rate (L/s) for test sites.

6. Witnessed certification of results.

B. Include test reports in final TAB report.

PART 2 - PRODUCTS

(Not Used)

PART 3 - EXECUTION

3.01 CLOSEOUT ACTIVITIES:

A. Provide in accordance with Section 01 77 00.

END OF SECTION

SECTION 23 09 10

HVAC INSTRUMENTATION AND CONTROLS

PART 1 - GENERAL

1.01 DESCRIPTION:

A. Provide HVAC instrumentation and controls as indicated and in compliance with Contract Documents.

B. Intent:

1. It is the intent of this Section that the Air Handling Unit (AHU) supplier be provided with the specified control components required to be installed within or on the air handling units for installation by the AHU manufacturer at its factory. The AHU manufacturer is to install the specified control components on or within the unit, including conduit for all control wiring and copper tubing for all differential pressure devices such as flow transmitters so that penetrations of the unit will not be required after the unit arrives at the Site.

2. The Contractor is to provide all required installation documents, instructions and supervision required at the AHU manufacturer's factory to ensure that control components, including wiring, are installed according to this Section's requirements.

3. The Contractor is to verify correct installation and operation of the controls at the AHU manufacturer's factory in conjunction with the manufacturer.

4. All control components not installed on AHUs shall be field-installed by the Contractor.

5. The Automatic Controls system described herein is based on Alerton utilizing the latest visual logic controller technologies.

1.02 REFERENCES:

A. American National Standards Institute (ANSI):

1. INCITS 4: Information Systems - Coded Character Sets - 7-Bit American National Standard Code for Information Interchange (7-Bit ASCII).

B. American Society of Heating, Refrigerating, and Air Conditioning Engineers (ASHRAE):

1. Handbook Fundamentals.

2. Guideline 3: Reducing Emission of Fully Halogenated Refrigerants in Refrigeration and Air-Conditioning Equipment and Systems.

3. 135: A Data Communication Protocol for Building Automation and Control Networks

C. American Society of Mechanical Engineers (ASME):

1. B19.3: Safety Standard for Compressors for Process Industries.

D. American Water Works Association (AWWA):

1. C704: Propeller-Type Meters for Waterworks Applications

E. Electronic Industries Alliance (EIA):

1. TIA-232-F: Interface Between Data Terminal Equipment and Data Circuit-Terminating Equipment Employing Serial Binary Data Interchange.

2. 485: Standard for Electrical Characteristics of Generators and Receivers for Use in Balanced Digital Multi-point Systems.

F. Federal Communications Commission (FCC).

G. International Organization for Standardization (ISO):

1. 8802-3: Information Technology - Telecommunications and Information Exchange Between Systems - Local and Metropolitan Area Networks

H. National Fire Protection Association (NFPA):

1. 70: National Electrical Code

2. 90A: Standard for the Installation of Air Conditioning and Ventilating Systems

I. Underwriters Laboratories, Inc. (UL):

1. 916: Standard for Safety Energy Management Equipment.

1.03 DEFINITIONS:

A. The terms “HVAC Control System,” “Automatic Temperature Control System,” “Building Automation System,” and “Environmental Management and Control System” shall be considered equivalent and used interchangeably for the purposes of this Contract.

B. Algorithm: A software procedure for solving a recurrent mathematical or logical problem.

C. Analog: A continuously varying signal or value (temperature, current, velocity, etc.).

D. Binary: A two-state system where an “ON” condition is represented by a high signal level and an “OFF” condition is represented by a low signal level.

E. Control Wiring:

1. Wiring, high or low voltage other than power wiring required for proper operation of mechanical systems.

2. Includes conduit, wire and wiring devices to install a complete control system including motor control circuits, interlocks, thermostats, and like devices.

3. Includes wiring from DDC panels to all sensors and points defined in the Drawings, Device and Control Wiring Lists in Division 40, or specified herein and required to execute the sequence of operation.

F. Power Wiring:

1. Includes necessary power wiring (120V or 24V) to HVAC control devices, and digital controllers including terminal units and actuators.

G. Control Process: Software required to complete control loop from input signal to interlock logic and process calculation to final output signal control.

H. Deadband: Temperature range over which no heating or cooling energy is supplied, such as 22 to 25 degrees C; as opposed to single point changeover or overlap, or a range from a set point over which no control action is taken.

I. Direct Digital Control (DDC): Consists of microprocessor-based controllers with control logic performed by software. Analog-to-digital (A/D) converters transform analog values into digital signals that microprocessors can use.

J. Power Wiring: Line voltage wiring to mechanical equipment. Line voltage wiring that also serves as control circuit, such as line voltage thermostat, or involves interlocking with damper shall be considered control wiring.

K. Abbreviations that may be used in this Section:

1. AI: Analog Input

2. AC: Air Conditioning.

3. ANSI: American National Standards Institute

4. AO: Analog Output

5. ASC: Application Specific Controller

6. ASCII: American Standard Code for Information Interchange
7. ASHRAE: American Society of Heating, Refrigeration and Air Conditioning Engineers
8. ATC: Automatic Temperature Control.
9. AWG: American Wire Gauge
10. AWS: Advanced Operator Workstation (BACnet Standard)
11. BACnet: Building Automation Controls Network
12. BAS: Building Automation System.
13. BIBB: BACnet Interoperability Building Block
14. BCC: Building Control Contractor
15. BCM: Building Control Module
16. CHWS/R: Chilled/Hot Water Supply/Return.
17. CMOS: Complementary Metal Oxide Semiconductor.
18. CPU: Central Processing Unit
19. DB: Dry Bulb (temperature)
20. DDC: Direct Digital Control.
21. DI: Digital Input
22. DO: Digital Output
23. DX: Direct Expansion.
24. EP: Electro-Pneumatic
25. EEPROM: Electronic Erasable Programmable Read Only Memory.
26. EIA: Electronic Industries Alliance
27. EMCS: Environmental Management and Control System.
28. EEPROM: Electronically Erasable Programmable Read Only Memory
29. EMI: Electromagnetic Interference
30. EMT: Electrical Metallic Tubing

31. GUI: Graphical User Interface
32. IEEE: Institute of Electrical and Electronics Engineers
33. HCP: HVAC Control Panel.
34. HGS/R: Hot Glycol Supply/Return.
35. HMI: Human-Machine Interface.
36. HOA: Hand-Off-Auto (Switch).
37. HVAC: Heating, Ventilation, and Air Conditioning
38. I/O: Input/Output
39. ISP: Internet Service Provider
40. IP: Current (I) - Pressure (P), as in IP transducer.
41. LAN: Local Area Network
42. LCD: Liquid Crystal Display.
43. LED: Light Emitting Diode.
44. MSCR: Manual Speed Control Regulators
45. MCC: Motor Control Center
46. OWS: Operator Workstation
47. PC: Personal Computer
48. PE: Pneumatic-Electric
49. PIC: Protocol Implementation Conformance Statement
50. PLC: Programmable Logic Controller.
51. POI: Portable Operator's Interface
52. POT: Portable Operator's Terminal
53. PICS: Protocol Implementation Conformance Statement
54. RAM: Random Access Memory.
55. RF: Radio Frequency

56. RFI: Radio Frequency Interference

57. RH: Relative Humidity

58. RTD: Resistance Temperature Detectors.

59. TCP/IP: Transmission Control Protocol/Internet

60. TRGSC: Threaded Rigid Galvanized Steel Conduit

61. VAV: Variable Air Volume.

62. VLC: Visual Logic Field Controller

63. W3: Nonpotable Water.

64. WB: Wet Bulb (Temperature)

65. UPS: Uninterruptible Power Supply

66. VLAN: Virtual Local Area Network

67. VFD: Variable Frequency Drive

68. WAN Wide Area Network

1.04 SYSTEM DESCRIPTION:

A. Generally, the control Work consists of provision of controls for new Heating, Ventilation and Air Conditioning (HVAC) systems. The Work is to include:

1. Provision of all labor, materials, Products, equipment and services to supply, install and commission the Building Automation System (BAS) as specified in this Section. The existing BAS network controllers shall be integrated seamlessly into the new building automation system. Provide all necessary software and hardware panels and integrate via BACnet Operator Workstation.

2. Supply, mounting as required, and connection of all required piping, duct and equipment mounted control components.

3. Provision of open-system, networked DDC units and all required software and programming.

4. Provision of Local Display Terminals at each AHU and heating system controllers.

5. Provision of all computer hardware and software, operator interface devices, the local area network (LAN), field sensors, transmitters and other control components required to meet the specified performance criteria.

6. Provision of all equipment and expertise required to connect to and communicate properly over the facility-wide Virtual LAN (VLAN).

7. All required calibration, testing, commissioning, software programming and data base generation.

8. Provision of all required control wiring in conduit, and all required control air piping and/or instrument tubing.

9. Coordination with Subcontractors and Other Contractors performing Work associated with the DDC controls, and coordination and cooperation with personnel performing mechanical and control system commissioning.

10. Provision of 120 V power wiring between lighting panel circuits provided under Division 16 and field-mounted DDC panels and other control components requiring 120 V power. Power to AHU-mounted controls shall be through a 120 V power source termination provided at the unit by the AHU supplier.

11. Control sequences and functions including alarms, monitoring and resetting functions, shall not be limited to point schedules and sequences of operation.

12. Provide sequences and functions as required to deliver a fully functioning HVAC system.

B. The system shall be fully BACnet compliant at both the network and local bus levels.

C. Control System Types:

1. The following control system types are used in this Contract:

a. Electric/Electronic Control System (ELECTRIC):

(1) System using simple electric or electronic control devices.

(2) User interface at control device.

b. Networked DDC Control System (NETWORKED DDC):

(1) Microprocessor-based DDC Control System utilizing standalone DDC controllers.

(2) Information within control system can be utilized by any control component over high-speed network.

(3) User interface via computer workstation and/or portable terminal.

(4) Refer to Section 23 09 16 for additional requirements.

2. Provide control system(s) of the architecture defined in the Control Type Schedule, below:

Control Type Schedule		
Location	**System**	**Control Type**
All	Simple thermostatic controlled hydronic unit heaters and electric unit heaters	ELECTRIC
All	All other HVAC Systems not controlled by ELECTRIC control type.	NETWORKED DDC

D. Performance Requirements: Design control system and equipment to perform under the following conditions:

1. Temperature, Ambient:

a. Summer maximum: 95.3 degrees F.

b. Winter minimum: 18.2 degrees F.

c. Based on ASHRAE Handbook fundamentals weather data for Albuquerque, NM; WMO#723650

2. Temperature, Indoor:

a. Heated and Ventilated Process Areas: Summer maximum 102 degrees F; winter minimum 50 degrees F, unless indicated otherwise in the Contract Documents.

E. Air-conditioned Non-process Areas: Summer maximum 75 degrees F; Winter minimum 70 degrees F, unless indicated otherwise in the Contract Documents.

1.05 GENERAL SYSTEM REQUIREMENTS:

A. Provide a Building Automation System (BAS) consisting of a networked, fully distributed processing, on-line, real-time, direct digital control system consisting of microprocessor-based, direct digital controllers for control and monitoring of air handling, heating and ventilation, cooling and other specified systems. The BAS is to consist of the following:

1. Portable Operator Interface (POI)

2. Two (2) Portable Operator Terminals (POT)

3. Local Display Terminals (LDTs)

4. Field sensors and control components

5. Operating, application and system specific software

B. The BAS system network is to utilize an open architecture capable of each and all of the following:

1. Communication at the BCM level (Tier 1) via a high-speed Ethernet TCP/IP network configuration operating at a speed of 100 Mb/sec according to ANSI / ASHRAE™ Standard 135-2004.

2. Communicating via a MS/TP 76.8 KBaud protocol (based on ASHRAE SSPC-135, Clause 9), as the common communication protocol between Visual Logic Field Controllers (VLCs)

3. Connecting via LonMark in accordance with ANSI/EIA 709 (LonWorks) to LonMark FTT-10 transceivers at the ASC (Tier 2) level.

C. The controls systems are to include the necessary hardware, equipment and software to allow all controls systems application facilities and features to be accessible via the Regions' WAN and an Internet Browser.

D. The BAS is to support auto-dial/auto-answer communications to allow the BCM to communicate with other remote Controls Systems Nodes via standard telephone lines, either DSL or voice grade. All such lines are to be provided by the Regions at the Regions' cost.

E. The software tools required to network manage the ANSI / ASHRAE™ Standard 135-2004 BACnet protocol must be provided with the system.

F. All applicable devices shall have a Protocol Implementation Conformance Statement (PICS) that identifies all of the portions of BACnet that are implemented.

G. The controls systems application software tool provided for the generation of custom and database definitions are to be resident in the BAC net Advanced Operator Work Station (AWS).

H. The system is to be modular in nature and is to permit expansion of both capacity and functionality through the addition of sensors, actuators, controllers and operator devices.

I. Each DDC Controller is to operate independently by performing its own specified control, alarm management, operator I/O and data collection.

J. All DDC Controllers are to be complete with all required hardware and software to permit connection together to form a network. This means that DDC controllers are to be able to access any data from, or send control commands and alarm reports directly to, any other DDC Controller or combination of controllers on the network without dependence upon a central processing device. DDC Controllers are to also be able to

send alarm reports to multiple operator workstations without dependence upon a central processing device.

K. VLCs are to have the capability to interface directly with a graphic display interface without the need for additional communication cards and software.

L. A rack-mounted server (located in the Administration Building Server Room) has been provided in a previous contract for archiving data, storing graphics, storing applications, running trend logs and data/software back-up purposes. The installation and setup of all graphics, data, and reporting programs required as part of this Contract shall be provided to match those installed for buildings and areas forming part of previous contracts. The Regions shall be provided with software tools and training required to create color graphics and map points to graphics for any new systems added in the future.

M. Major control components, material and equipment are to be the catalogue products of a single manufacturer regularly engaged in production and installation of automatic temperature control systems and accessories. All Products are to be manufacturer's latest standard design that complies with the specification requirements.

N. Install system using competent workmen who are fully trained in the installation of automatic temperature control equipment. Single source responsibility of the Contractor's supplier is to be for the complete installation and proper operation of the DDC control system and is to include debugging and proper calibration of each component in the entire system.

O. The OWS Graphical User Interfaces shall provide PC-based, user-friendly interfaces that afford an Operator the means to access and display information about any of the systems controlled and monitored by the EMS. Provide English language operator interfaces using readily understood abbreviations and descriptors so as to provide a convenient means by which an Operator can access information and modify setpoints, schedules and control points comprising the BAS.

P. The Contractor shall provide full technical assistance during testing, start-up, and commissioning of the overall system.

1.06 SUBMITTALS:

A. Submit the following shop drawings in accordance with Section 01 33 00.

B. Shop Drawings:

1. BAS network architecture drawings including all nodes, interconnections, and controller locations/identifiers.

2. DDC controller panel layout diagrams showing all components contained within and/or on panels.

3. PIC/BIBB statement clarifying which BACnet objects and services are supported by each applicable controller.

4. Schematic control diagrams for all systems indicating all control/monitoring components, DDC I/O point identifiers/tags (including those indicated on design drawings) and a bill of materials that includes, point identifiers/tags, quantities, part numbers, descriptions, and optional features.

5. Sequences of operation. Use exact wording indicated on design drawings for sequences of operation. Changes to design sequences shall not be made without first discussing and getting approval from the Consultant.

6. Samples of graphic display screens for various HVAC system types and associated menus.

7. A point schedule indicating all connected "hard" data points, including point type, DDC controllers to which they are connected, input/output devices (sensors, transducers, etc.), point addresses and operator notations.

8. Details of all BAS interfaces and connections to the work of Other Contractors.

9. Control Damper Schedule including a separate line for each damper provided under this Section and a column for each of the damper attributes, including: Code Number, Fail Position, Damper Type, Damper Operator, Duct Size, Damper Size, Mounting, and Actuator Type. Include damper actuator sizing calculations, in schedule form

10. Control Valve Schedules including a separate line for each valve provided under this Section and a column for each of the valve attributes: Code Number, Configuration, Fail Position, Pipe Size, Valve Size, Body, Configuration, Close-off Pressure, Capacity, Valve pressure drop, Design Pressure, and Actuator Type. Include control valve sizing calculations, in schedule form.

11. Wiring diagrams for all connected devices, indicating fan interlocks, DDC control/monitoring points, control wiring interconnections to VFDs, voltage requirements and all connections. In addition to any point/device nomenclature used by this Section indicate the Regions' required nomenclature as indicated on the Contract Drawings.

12. Technical specification data sheets for each and every system component and software module. Clearly indicate the specific device part number/code being used where multiple selections and/or options are indicated. Include photo and description for all Products. For hardware devices include make, model, dimensions, weight of equipment, and electrical schematics, for all control system components.

C. Operation and Maintenance Manuals

1. An Operation and Maintenance manual shall be provided in both hard copy and compact disc media and shall include:

    a. Table of Contents

    b. The manufacturer's technical literature/specification for every system and component comprising the BAS.

    c. Calibration and maintenance instructions for all equipment.

    d. As-built (record) versions of shop drawings for all controlled systems. Revised shop drawings to reflect required changes discussed and agreed upon during the commissioning process.

    e. Layout drawings showing the installed location of all hardware devices.

    f. Interfaces to all third-party Products and work by Other Contractors.

    g. Descriptions and instructions on the use of all installed hardware, software (including the Graphical User Interface) and firmware. The level of detail shall be sufficient to permit the Regions to create their own color graphics, including set-up of real time points, from scratch.

    h. Archive copy of all Site-specific databases, control programs (sequences) and setpoints.

    i. Licenses, guarantee, and warranty documents for all equipment and systems.

    j. As-built diagrams of all control panels, VFD external control interfaces and starter controls including hardware layouts and wiring diagrams, where applicable.

2. The Operation and Maintenance Manual CD shall be self-contained, and include all necessary software required to access the Product data sheets. A logically organized table of contents shall provide dynamic links to view and print all Product data sheets. Viewer software shall provide the ability to display, zoom, and search all documents.

3. Maintenance manuals shall include instructions covering the operation, maintenance and troubleshooting of all controlled systems.

4. Supply three (3) copies of EMS Manuals for the project.

5. All manuals shall be finalized and available at the Site for use during operation and maintenance training.

6. Provide copies of final installed software programs on CD ROM.

D. Information Submittals:

1. Start-Up & Commissioning Data

2. A draft maintenance agreement.

3. Confirmation that the control system supplier has received and coordinated with all approved HVAC equipment submittals.

4. Experience and qualifications of the control system supplier's proposed representative who will supervise installation, adjustment, and calibration of control systems.

5. Performance test plan and schedule.

6. Test Results:

   a. Functional and performance test documentation.

   b. Component calibration sheets for each instrument and panel component as described in Section 40 90 00 - Process Instrumentation and Control Systems.

7. Operation and maintenance data: In accordance with Section 01 78 24. In addition, include the following detailed information:

   a. Operation and maintenance instructions for control system as furnished and installed, including control of associated mechanical and electrical equipment.

   b. Record of system adjustments and calibration methods.

   c. Performance test results.

E. Start-Up and Commissioning Data: Submit start-up and commissioning data in accordance with requirements specified in Sections 07 78 25, 20 05 00 and 23 29 00.

F. Control Work Certification: When control work has been completed and has been tested and adjusted at the site, certify in writing that the controls are complete, operational, and ready for acceptance.

1.07 QUALITY ASSURANCE:

A. Comply with the requirements specified in Section 01 43 00.

B. Systems shall be the product of one manufacturer.

C. Systems shall be manufacturer's standard cataloged product and modified to provide compliance with the drawings, specifications and the service conditions specified and indicated.

D. Materials, devices, appliances, and equipment used shall be indicated as acceptable by established standards of Underwriters Laboratories, Inc. (UL), Underwriters Laboratories of Canada (ULC) and Canadian Standards Association (CSA).

E. Codes and Standards: Meet the requirements of the applicable standards and codes listed below, except when more detailed or stringent requirements are indicated by the Contract Documents, including the requirements of this Section.

1. Underwriters Laboratories: Products shall be UL 916-PAZX listed or equivalent ULC and CSA listed.

2. National Electrical Code NFPA 70.

3. Federal Communications Commission Part J.

4. Applicable portions of networked DDC Control Systems shall comply with latest version of ASHRAE 135 (BACnet).

F. Qualifications of HVAC Controls System Supplier:

1. Minimum of 15 years' experience in design, installation, and maintenance of fully electronic building automation systems.

2. Minimum of 10 years' experience in design, installation, and maintenance of computer based, direct digital control, facility automation systems.

3. Capable of furnishing factory-trained technicians, competent to provide instruction, routine maintenance, and emergency service on Site within 4 hours after receipt of request.

4. Factory trained certified engineering and commissioning staff, and complete off-Site training facilities.

5. Necessary facilities to provide the Regions with complete maintenance, periodic inspection, and service contract. Refer to Maintenance subsection.

G. FCC Regulation: Electronic equipment shall conform to the requirements of FCC Regulation, Part 15, Section 15, Governing Radio Frequency Electromagnetic Interference and be so labeled.

H. Compatibility:

1. System shall have documented history of compatibility by design for a minimum of 15 years. Future compatibility shall be supported for no less than 10 years.

2. Compatibility shall be defined as:

a. Ability to upgrade existing field panels to current level of technology and extend new field panels on previously installed network.

b. Ability for any existing field panel microprocessor to be connected and directly communicate with new field panels without bridges, routers, or protocol converters.

I. Services of Manufacturer's Representative as specified herein.

J. Provide services of factory-trained Service Technician, specifically trained on type of equipment specified:

1. Service Technician must be present on site for all items listed below. Person-day requirements listed are exclusive of travel time, and do not relieve Contractor of the obligation to place equipment in operation as specified.

2. Installation: Inspect grouting, location of anchor bolts; setting, leveling, alignment, field erection; coordination of piping, electrical and miscellaneous utility connection.

3. Functional Completion Testing: Calibrate, check alignment and perform a functional test with water. Tests to include all items specified.

4. Field Performance Testing: Field performance test equipment specified.

5. Vendor Training: Provide classroom and field operation and maintenance instruction including all materials, slides, videos, handouts and preparation to lead and teach classroom sessions.

6. Credit to the Owner, all unused service person-days specified above, at the manufacturer’s published field service rate.

7. Any additional time required of the factory trained service technician to assist in placing the equipment in operation, or testing or to correct deficiencies in installation, equipment or material shall be provided at no additional cost to the Owner.

K. Manufacturer of systems shall have a minimum of five (5) operating installations with pumps of the size specified and in the same service as specified operating for not less than five (5) years.

1.08 DELIVERY, STORAGE, AND HANDLING:

A. Corrosion Protection:

1. Control panels, enclosures, and other equipment containing electrical or instrumentation and control devices, including spare parts, shall be protected from corrosion through use of corrosion-inhibiting vapor capsules.

2. Prior to shipment, capsules shall be provided within shipping containers and equipment as recommended by the capsule manufacturer.

3. During construction period, capsules shall be replaced in accordance with the capsule manufacturer's recommendations.

4. All control panels shall be sufficiently protected by packaging prior to installation in order to prevent abrasion and denting of panels.

1.09 MAINTENANCE:

A. Maintenance Service Agreement.

B. Furnish a draft maintenance and service agreement, prepared and signed by the Controls supplier, to provide the necessary preventive maintenance to keep the various control systems in proper working condition.

C. Fully describe the maintenance Work to be performed and estimate the cost of the maintenance during the 18-month warranty period after Substantial Performance of the Work and the subsequent year.

D. This service contract shall include 24-hour emergency service, 7 Days per week.

PART 2 - PRODUCTS

2.01 CONTROL COMPONENTS AND SYSTEMS

A. Acceptable Manufacturers:

1. First Named:

a. Alerton

2. Alternatives:

a. Siemens Building Technologies (Landis Division)

b. Johnson Controls Ltd. "Metasys"

c. "Apogee" system

d. Invensys "Network 8000".

2.02 MATERIALS:

A. General:

1. Products used in this installation shall be new, currently under manufacture, and shall have been applied in similar installations for a minimum of 2 years.

2. The system shall not be used as a test site for new products, unless explicitly approved by the Consultant, in writing.

B. Control Components:

1. Control the range to obtain the specified capacities.

2. Sensitivity to maintain control points close enough to set point for acceptable offset, without cycling equipment more frequently than recommended by the manufacturer.

3. Field or computer adjustable to actual set point ranges. Adjustable to other settings that will provide proper operation of entire control system.

C. Controls Interfacing:

1. Interface controls properly with factory supplied components of mechanical systems. Coordinate special control interfacing requirements.

2. For equipment that requires special interfacing with control system, provide equipment with integral controls or provide accessory devices required for operation of total mechanical system.

3. Coordinate interfaces with electrical Work as necessary.

4. Provide electric, electronic, and mechanical devices as required to properly interface with prewired control panels furnished with HVAC equipment and with other mechanical and electrical components.

2.03 LABELING:

A. All Products, namely electrical materials, devices, appliances, and equipment used, shall be indicated as acceptable by established standards of Underwriters Laboratories, Inc. (UL), Underwriters Laboratories of Canada (ULC), Factory Mutual (FM) and Canadian Standards Association (CSA).

B. A valid label affixed to an item shall provide indication of Product acceptance by the required agencies.

C. HVAC control panels and control components that consist of multiple components shall bear UL, ULC and CSA listing mark on unit.

2.04 SERVICE CONDITIONS:

A. Refer to Section 26 05 10, and the Electrical Drawings for classification of areas as hazardous, corrosive, wet, indoor dry, and dust-tight.

B. Use materials and methods and enclose devices in NEMA enclosure types suitable for the classification indicated, and as required by NFPA 70.

C. Exhaust ductwork shall be considered the same classification as the area served.

D. Instruments within 900 mm of ducts conveying air from spaces classified as Class I, Division 1 or 2 (in accordance with NFPA 70) shall be suitable for the same area classification as the space exhausted.

2.05 ELECTRICAL COMPONENTS AND ACCESSORIES:

A. Electrical components shall be provided in accordance with the requirements of Division 26 - Electrical.

B. Wiring:

1. In accordance with Section 26 05 10 and NFPA 70.

2. Insulation shall be rated 600 volts, minimum.

C. Electrical Raceways: In accordance with Section 26 05 33 and NFPA 70.

D. Provide surge suppressors on each power connection, meeting applicable requirements.

2.06 FIELD COMPONENTS AND INSTRUMENTS:

Not Used

2.07 MICROELECTRONIC CONTROL COMPONENTS:

Not Used

2.08 ACCESSORIES:

A. Corrosion-inhibiting vapor capsules as manufactured by:

1. Northern Technologies International Corporation; Model Zerust VC.

2. Hoffman Enclosures Inc.; Model A-HCI

B. Lifting Lugs: Provide suitably attached for equipment assemblies and components weighing over 45 kg.

C. Equipment Identification Plates:

1. Provide a 16-gauge type stainless steel identification plate securely mounted on each separate equipment component and control panel in a readily visible location. The plate shall bear 6 mm high engraved block type black enamel filled equipment identification number tags indicated on the Drawings.

2. Provide on or adjacent to all control devices, and for equipment whose function is not readily apparent, including:

   a. Manual Speed Control Regulators

   b. Fan Control Stations

   c. Special purpose devices.

   d. HVAC control panels.

2.09 EQUIPMENT FINISH:

A. Provide materials and equipment with the manufacturer's standard finish system. Provide manufacturer's standard finish color, except where a specific color is indicated in the Contract Documents.

B. If manufacturer has no standard color, provide gray semi-gloss finish as approved by the Consultant.

PART 3 - EXECUTION

3.01 SEQUENCES OF OPERATION:

A. Reference the Contract Drawings.

3.02 INSTALLATION:

A. General:

1. Install systems and materials in accordance with the manufacturer's instructions, rough-in drawings, and equipment details.

2. Changes in location or installation of control devices or equipment shall be approved by the Consultant before proceeding with the Work.

3. Mount devices requiring manual reset and all other user serviceable control devices in readily accessible locations.

B. Wiring:

1. General:

   a. Install electric wire, cable, fittings, and conduit associated with systems specified in this Section, in accordance with requirements of NFPA 70.

   b. Install control and interlock wiring separate from power wiring.

c. Number code or color code conductors, excluding those used for individual zone controls, appropriately for future identification and servicing of control system.

d. Provide wire markers on each conductor in the panel and at load connections. Identify circuit with control wire number.

e. Restrain wiring in control panels by plastic ties or ducts.

f. Hinge wiring shall be secured at each end so that any bending or twisting will be around longitudinal axis of wire and bend area shall be protected with sleeve.

g. Arrange wiring neatly, cut to length, and remove surplus wiring. Provide abrasion protection for any wire bundles that pass-through holes or across edges of sheet metal.

h. Use the manufacturer's recommended tool with proper sized anvil for crimp terminations. No more than two wires may be terminated in single crimp lug and no more than two lugs may be installed on single screw terminal.

i. Wiring shall not be spliced or tapped except at device terminals or terminal blocks.

j. Properly support and run wiring in a neat manner.

k. Run wiring parallel or at right angles to building structure.

2. Concealment:

a. Install line voltage control wiring, wiring exposed to view, surface-mounted wiring, and wiring concealed within walls in threaded rigid galvanized steel conduit (TRGSC), in accordance with Division 26 requirements.

b. Install exposed and concealed low voltage control wiring systems in TRGSC.

c. Wiring within enclosures shall be neatly bundled and anchored to prevent obstruction to devices and terminals.

d. Conduit shall be sized to suit the number, type, and size of conductors as specified in Section 26 05 33.

C. End-User Accessible Control Components:

1. Do not mark room thermostats.

2. Mount user adjustable control components (room thermostats, humidistats, temperature sensors, humidity sensors, etc.) level and in accordance with applicable accessibility requirements of the local Building Code.

D. Control Valves:

1. Verify correctness of installation.

2. Verify proper control action.

3. Adjust limit switch settings.

4. Adjust opening and closing speeds, and travel stops.

5. Stroke control valves by means of associated controller.

E. Control Dampers:

1. Verify correctness of installation.

2. Verify proper control action.

3. Adjust limit switch settings.

4. Adjust opening and closing speeds, and travel stops.

5. Stroke control dampers by means of associated control output.

F. Variable Frequency Drives:

1. Verify control wiring installed to adjustable frequency drive.

2. Calibrate and adjust remote speed control loop and feedback loop.

3. Verify control actions and interlocks.

4. Adjust minimum and maximum speed settings.

5. Ramp adjustable frequency drive by simulation of associated controller output.

G. DDC Controllers:

1. Verify control wiring for correctness.

2. Verify power wiring.

3. Calibrate and adjust manual and auto control actions of controllers.

4. Tune control loop.

5. Stroke associated final element through controller output.

6. Verify set points and alarm functions.

H. Control Panel Equipment:

1. Mount control panels level, plumb, and securely to wall or column. Verify that adequate clearance is provided to allow for full front panel swing.

2. Provide field terminations and conduit knockouts for control/instrumentation wiring.

3. Field termination wiring shall have designated instrument tag.

4. Panel cutouts shall be cut, punched, or drilled and smoothly finished with round edges.

5. Provide separate conduit entry for each power feeder circuit.

6. Signals requiring grounding shall be grounded within panel.

7. Field end of conductor shield/drain wires shall be folded back and placed under heat-shrink tubing without being grounded.

8. Panel end of conductor shield/drain wires shall be covered with clear tubing at panel and grounded.

9. Calibrate instrumentation provided on control panels.

10. Provide labels for internal panel material (e.g., terminal blocks, power supplies, relays, PLC racks).

3.03 FIELD QUALITY CONTROL:

A. Performance and Functional Testing: Tests and certification shall be as specified in each equipment section.

3.04 TRAINING:

A. The Contractor is to provide, during normal working hours, a competent instructor to give full instruction to designated personnel in the adjustment, operation and maintenance of the system installed, rather than a general training course.

B. Training is to include:

1. Explanation of drawings, sequences of operations and maintenance manuals

2. Walk-through of the Site to locate and identify major control system components, e.g. controllers, sensors, pushbutton stations.

3. Overview and description of the functionality of main components (e.g, controllers) comprising the EMS.

4. Overview of how each controlled and monitored system operates, based on the final installed sequence of operation, including operation in “Hand” mode and the impact of manual commands (e.g. point ‘On/Off’) issued via the EMS.

5. Instruction on the use of various Operator’s Interfaces including the Local Display Terminal and POTs, for accessing and modifying all operator-adjustable parameters, including setpoints and schedules.

6. Instruction in the creation of system graphics.

7. Hands-on demonstrations of how to access and modify operator-adjustable information including setpoints and schedules.

8. Description of various security access levels and how to assign functions, according to access level requirements, for various personnel using the system

9. Basic hardware maintenance, including sensors and end device adjustment, calibration and replacement procedures.

C. The Contractor shall provide handouts, agendas and course material to assist the trainees in understanding what material is to be covered in each training session. Copy to be provided to the Consultant for approval at least 10 Days prior to the start of training.

D. Training classes shall be held at the Site in a classroom setting, in the field and/or at an OWS, to suit the particular type of training being carried out.

E. Provide a total of 24 hours of training, for up to 6 people. Training shall be arranged to accommodate the schedules of those involved and each session shall be a maximum of 4 hours each.

F. The training course shall include "hands-on" type of instruction.

G. Provide a competent instructor who is both familiar with the technical details of the equipment, as well as the systems and process being controlled. Instruction shall be geared towards the adjustment, operation and maintenance of the particular BAS systems and components installed as opposed to being generic in nature.

H. Allow for 8 hours of refresher training three months following final acceptance of the BAS by the Regions.

I. Since the Regions may require personnel to have a more comprehensive understanding of the hardware and software, additional training must be available from the Contractor. If such training is required by the Regions, it will be contracted for at a later date. Provide a description of available local and factory customer training.

3.05 SET-UP, CALIBRATION, TESTING AND VERIFICATION:

A. Provide set-up, calibration, testing, and verification for all systems and components comprising the complete BAS by a qualified member(s) of the Contractor's installation team.

B. Adjust all devices and components, as required, to ensure that all hardware and sequences of operation are performing correctly and that all analog values are displayed to the accuracy specified.

C. Include all alarms, start/stop and status conditions as part of the set-up and checking process to ensure proper operation.

D. Provide qualified control system technicians to make adjustments to control systems to suit air and water balancing and testing, and commissioning Work specified in other Sections.

E. Coordinate with Subcontractors and Other Contractors (e.g. Electrical), as required, to ensure that all aspects of the operation of the EMS are checked out and confirmed as working properly.

F. Prepare and update commissioning documents called for under subsection "Start Up and Commissioning Submittals and Services".

G. Perform all required final adjustments to all devices and components in preparation for Commissioning.

H. All test equipment required to set-up, calibrate, test and verify proper system/component operation shall be provided by the Contractor.

I. All test equipment shall be calibrated to an industry-recognized standard.

J. Refer to Section 23 29 00 for additional requirements related to testing

3.06 START UP AND COMMISSIONING SUBMITTALS AND SERVICES:

A. Control Work Certification: Following completion of the Contractor's set-up, calibration, testing and verification procedure, certify in writing that the controls are 100 percent complete, fully operational, and ready for verification, leading to acceptance. Submit certification to the Consultant, in writing, stating that the control systems have been set-up, calibrated, tested, adjusted and verified and are ready for commencement of commissioning procedures leading to acceptance.

B. Along with the Certification described above provide start-up and commissioning documents and data described below, as a minimum, to the Consultant to assist in verifying the proper functioning of all DDC programs and hardware components:

1. Testing and checkout forms signed by the installer's technicians attesting to the fact that each point, programmed sequence, graphic etc. has been thoroughly tested and checked and is functioning as intended.

2. A summary showing all installed setpoints (including alarm setpoints) and schedules.

3. Marked-up (e.g. use tracking feature in Word) copies of installed sequences of operation indicating any changes made by the Contractor since the time of shop drawing approval.

4. A marked-up version of I/O point schedules indicating any changes made by the Contractor since the time of shop drawing approval.

5. Trend logs of all points (e,g. space temperature) with corresponding setpoints demonstrating the system's ability to achieve and maintain a steady state condition.

6. Alarm logs indicating the status of all alarm points, including points regularly going into alarm.

7. Submit Point Data Input forms for any non-specified setpoints and schedules to the Consultant who will fill out with the Contractor's assistance. Input this point data into the system.

C. Once the above documentation has been received and is deemed satisfactory, the Contractor shall demonstrate to the Consultant and/or the Building Services Commissioning Agent and assist the Testing and Balancing Agent as defined in Section 23 29 00 the proper operation of all specified components, sequences and software. The Consultant and/or the Regions reserve the right to observe all or some of these commissioning sessions.

D. Include for supplying at the Site during commissioning procedures, for the length of time required, qualified control technicians involved with implementation of the EMS and test equipment required to demonstrate and confirm operation of all EMS components and programming.

E. Correct any deficiencies identified by the Consultant and/or the Commissioning Agent at the time of inspection or identified thereafter in his/her written report, after which a re-evaluation check shall be performed. Repeat this procedure, if necessary, until acceptable performance has been established by the Consultant and/or the Commissioning Agent.

F. Wherever possible, control system commissioning is to be carried out under actual working conditions.

G. Successful conclusion of the commissioning process, along with submission of all required documents (e.g. O&M manuals) and completion of training shall form the basis for final acceptance of the EMS.

H. Control system shall be adjusted and calibrated by a qualified manufacturer's representative.

I. Calibrate control devices at time of installation to ensure measuring and reading accuracy.

J. Adjustment Record:

1. Prepare a complete record of system adjustments for each control system.

2. Indicate deviations from specified temperatures.

3. Include a copy of the completed record in each copy of the Operation and Maintenance Manual.

3.07 INSTALLATION OF CONTROL WIRING AND CONDUIT:

A. Perform all control wiring associated with the installation of electric thermostats.

B. Provide 120 V power wiring between lighting panels (provided under Division 16) and field-mounted DDC panels and other control components requiring 120 V power. Power to AHU-mounted controls shall be through a 120 V power source termination provided at the unit by the AHU supplier.

C. Provide dedicated power circuits for all major field-mounted equipment, including controllers. Provide means of locking circuit breaker panel switches for circuits serving major pieces of equipment so that power will not be inadvertently interrupted.

D. Install control and power wiring in TRGSC in accordance with the standards and requirements identified in Division 26.

E. At end of run connections to sensors or controlled devices, located 2.5 meters or more above floor level, flexible (seal tight) conduit (maximum length: 1 meter) is permissible.

F. Provide all required boxes, connectors, and other wiring accessories. Use flexible conduit where conduits cross flexible duct connections and building expansion joints.

G. Plenum-rated cable run within ceiling spaces is acceptable in finished (e.g. office) areas provided it is run parallel to building surfaces, neatly bundled and supported at regular intervals from appropriate anchors.

H. Conceal all wiring run below ceiling level in finished areas such as offices and associated areas.

3.08 CLEANING AND TOUCHUP PAINTING:

A. Touchup scratches, scrapes, or chips in exterior surfaces with finish matching type, color, consistency, and type of surface of original finish.

3.09 CLOSEOUT ACTIVITIES:

A. Provide in accordance with Section 01 77 00.

END OF SECTION

SECTION 23 11 23

FACILITY NATURAL-GAS PIPING

PART 1 – GENERAL

SUMMARY

A. Section Includes:

1. Pipes, tubes, and fittings.
2. Piping specialties.
3. Piping and tubing joining materials.
4. Manual gas shutoff valves.
5. Pressure regulators.
6. Dielectric unions.

1.2 ACTION SUBMITTALS

A. Product Data: For each type of product indicated.

B. Shop Drawings: For facility natural-gas piping layout. Include plans, piping layout and elevations, sections, and details for fabrication of pipe anchors, hangers, supports for multiple pipes, alignment guides, expansion joints and loops, and attachments of the same to building structure. Detail location of anchors, alignment guides, and expansion joints and loops.

1.3 INFORMATIONAL SUBMITTALS

A. Field quality-control reports.

1.4 CLOSEOUT SUBMITTALS

A. Operation and maintenance data.

1.5 QUALITY ASSURANCE

A. Steel Support Welding Qualifications: Qualify procedures and personnel according to AWS D1.1/D1.1M, "Structural Welding Code - Steel."

B. Electrical Components, Devices, and Accessories: Listed and labeled as defined in NFPA 70, by

a qualified testing agency, and marked for intended location and application.

PART 2 - PRODUCTS

2.1 PERFORMANCE REQUIREMENTS

A. Minimum Operating-Pressure Ratings:

1. Piping and Valves: 100 psig minimum unless otherwise indicated.

2. Service Regulators: 65 psig minimum unless otherwise indicated.

B. Natural-Gas System Pressures within Buildings: Two pressure ranges. Primary pressure is more than 0.5 psig but not more than 2 psig and is reduced to secondary pressure of 0.5 psig or less.

2.2 PIPES, TUBES, AND FITTINGS

A. Steel Pipe: ASTM A 53/A 53M, black steel, Schedule 40, Type E or S, Grade B.

1. Malleable-Iron Threaded Fittings: ASME B16.3, Class 150, standard pattern.

2. Wrought-Steel Welding Fittings: ASTM A 234/A 234M for butt welding and socket welding.

3. Unions: ASME B16.39, Class 150, malleable iron with brass-to-iron seat, ground joint, and threaded ends.

4. Protective Coating for Underground Piping: Factory-applied, three-layer coating of epoxy, adhesive, and PE.

a. Joint Cover Kits: Epoxy paint, adhesive, and heat-shrink PE sleeves.

B. Corrugated, Stainless-Steel Tubing: Comply with ANSI/IAS LC 1.

1. Tubing: ASTM A 240/A 240M, corrugated, Series 300 stainless steel.

2. Coating: PE with flame retardant.

a. Surface-Burning Characteristics: As determined by testing identical products according to ASTM E 84 by a qualified testing agency. Identify products with appropriate markings of applicable testing agency.

1) Flame-Spread Index: 25 or less.

2) Smoke-Developed Index: 50 or less.

3. Fittings: Copper-alloy mechanical fittings with ends made to fit and listed for use with corrugated stainless-steel tubing and capable of metal-to-metal seal without gaskets. Include brazing socket or threaded ends complying with ASME B1.20.1.

4. Striker Plates: Steel, designed to protect tubing from penetrations.

5. Manifolds: Malleable iron or steel with factory-applied protective coating. Threaded connections shall comply with ASME B1.20.1 for pipe inlet and corrugated tubing outlets.

2.3 PIPING SPECIALTIES

A. Appliance Flexible Connectors:

1. Indoor, Fixed-Appliance Flexible Connectors: Comply with ANSI Z21.24.

2. Indoor, Movable-Appliance Flexible Connectors: Comply with ANSI Z21.69.

3. Corrugated stainless-steel tubing with polymer coating.

4. Operating-Pressure Rating: 0.5 psig.

5. End Fittings: Zinc-coated steel.

6. Threaded Ends: Comply with ASME B1.20.1.

7. Maximum Length: 72 inches

B. Quick-Disconnect Devices: Comply with ANSI Z21.41.

1. Copper-alloy convenience outlet and matching plug connector.

2. Nitrile seals.

3. Hand operated with automatic shutoff when disconnected.

4. For indoor or outdoor applications.

5. Adjustable, retractable restraining cable.

C. Y-Pattern Strainers:

1. Body: ASTM A 126, Class B, cast iron with bolted cover and bottom drain connection.

2. End Connections: Threaded ends for NPS 2 and smaller.

3. Strainer Screen: 40-mesh startup strainer and perforated stainless-steel basket with 50 percent free area.

4. CWP Rating: 125 psig.

D. Weatherproof Vent Cap: Cast- or malleable-iron increaser fitting with corrosion-resistant wire screen, with free area at least equal to cross-sectional area of connecting pipe and threaded-end connection.

JOINING MATERIALS

2.
4

A. Joint Compound and Tape: Suitable for natural gas.

2. MANUAL GAS SHUTOFF VALVES

A. See "Aboveground Manual Gas Shutoff Valve Schedule" Articles for where each valve type is applied in various services.

B. General Requirements for Metallic Valves, NPS 2 and Smaller: Comply with ASME B16.33.

1. CWP Rating: 125 psig.

2. Threaded Ends: Comply with ASME B1.20.1.

4. Tamperproof Feature: Locking feature for valves indicated in "Underground Manual Gas Shutoff Valve Schedule" and "Aboveground Manual Gas Shutoff Valve Schedule" Articles.

5. Listing: Listed and labeled by an NRTL acceptable to authorities having jurisdiction for valves 1 inch and smaller.

6. Service Mark: Valves 1-1/4 inches to NPS 2 shall have initials "WOG" permanently marked on valve body.

C. Two-Piece, Full-Port, Bronze Ball Valves with Bronze Trim: MSS SP-110.

1. Manufacturers: Subject to compliance with requirements, provide products by one of the following:

a. A.Y. McDonald Mfg. Co.

b. BrassCraft Manufacturing Co.; a Masco company.

c. Conbraco Industries, Inc.

d. Lyall, R. W. & Company, Inc.

e. Perfection Corporation.

2. Body: Bronze, complying with ASTM B 584.

3. Ball: Chrome-plated bronze.

4. Stem: Bronze; blowout proof.

5. Seats: Reinforced TFE; blowout proof.

6. Packing: Threaded-body packnut design with adjustable-stem packing.

7. Ends: Threaded, flared, or socket as indicated in "Underground Manual Gas Shutoff Valve Schedule" and "Aboveground Manual Gas Shutoff Valve Schedule" Articles.

8. CWP Rating: 600 psig.

9. Listing: Valves NPS 1 and smaller shall be listed and labeled by an NRTL acceptable to authorities having jurisdiction.

10. Service: Suitable for natural-gas service with "WOG" indicated on valve body.

D. Bronze Plug Valves: MSS SP-78.

1. Manufacturers: Subject to compliance with requirements, provide products by one of the following:

a. A.Y. McDonald Mfg. Co.

b. Lee Brass Company.

2. Body: Bronze, complying with ASTM B 584.

3. Plug: Bronze.

4. Ends: Threaded, socket, as indicated in "Underground Manual Gas Shutoff Valve Schedule" and "Aboveground Manual Gas Shutoff Valve Schedule" Articles.

5. Operator: Square head or lug type with tamperproof feature where indicated.

6. Pressure Class: 125 psig.

7. Listing: Valves NPS 1 and smaller shall be listed and labeled by an NRTL acceptable to authorities having jurisdiction.

8. Service: Suitable for natural-gas service with "WOG" indicated on valve body.

2.6 PRESSURE REGULATORS

A. General Requirements:

1. Single stage and suitable for natural gas.
2. Steel jacket and corrosion-resistant components.
3. Elevation compensator.
4. End Connections: Threaded for regulators NPS 2 and smaller.
5. Where installed indoors, regulators shall be rated by the manufacturer for use without a vent connection.

B. Line Pressure Regulators: Comply with ANSI Z21.80.

1. Manufacturers: Subject to compliance with requirements, provide products by one of the following:
   a. Actaris.
   b. American Meter Company.
   c. Eclipse Innovative Thermal Technologies.
   d. Fisher Control Valves & Instruments; a brand of Emerson Process Management.
   e. Invensys.
   f. Itron Gas.
   g. Maxitrol Company.
   h. Richards Industries.
2. Body and Diaphragm Case: Cast iron or die-cast aluminum.
3. Springs: Zinc-plated steel; interchangeable.
4. Diaphragm Plate: Zinc-plated steel.
5. Seat Disc: Nitrile rubber resistant to gas impurities, abrasion, and deformation at the valve port.
6. Orifice: Aluminum; interchangeable.

7. Seal Plug: Ultraviolet-stabilized, mineral-filled nylon.

8. Single-port, self-contained regulator with orifice no larger than required at maximum pressure inlet, and no pressure sensing piping external to the regulator.

9. Pressure regulator shall maintain discharge pressure setting downstream, and not exceed 150 percent of design discharge pressure at shutoff.

10. Overpressure Protection Device: Factory mounted on pressure regulator.

11. Atmospheric Vent: Factory- or field-installed, stainless-steel screen in opening if not connected to vent piping.

12. Maximum Inlet Pressure: 2 psig.

C. Appliance Pressure Regulators: Comply with ANSI Z21.18.

1. Manufacturers: Subject to compliance with requirements, provide products by one of the following:

a. Canadian Meter Company Inc.

b. Eaton.

c. Harper Wyman Co.

d. Maxitrol Company.

e. SCP, Inc.

2. Body and Diaphragm Case: Die-cast aluminum.

3. Springs: Zinc-plated steel; interchangeable.

4. Diaphragm Plate: Zinc-plated steel.

5. Seat Disc: Nitrile rubber.

6. Seal Plug: Ultraviolet-stabilized, mineral-filled nylon.

7. Factory-Applied Finish: Minimum three-layer polyester and polyurethane paint finish.

8. Regulator may include vent limiting device, instead of vent connection, if approved by authorities having jurisdiction.

9. Maximum Inlet Pressure: 0.5 psig.

2.7 DIELECTRIC UNIONS

A. Dielectric Unions:

1. Manufacturers: Subject to compliance with requirements, provide products by one of the following:

a. A.Y. McDonald Mfg. Co.

b. Capitol Manufacturing Company.

c. Central Plastics Company.

d. HART Industrial Unions, LLC.

e. Jomar Valve.

f. Matco-Norca.

g. Watts; a Watts Water Technologies company.

h. Wilkins.

i. Zurn Industries, LLC.

2. Description:

a. Standard: ASSE 1079.

b. Pressure Rating: 125 psig minimum at 180 deg F.

c. End Connections: Solder-joint copper alloy and threaded ferrous.

PART 3 - EXECUTION

3.1 OUTDOOR PIPING INSTALLATION

A. Comply with the International Fuel Gas Code for installation and purging of natural-gas piping.

B. Install underground, natural-gas piping buried at least 36 inches below finished grade. Comply with requirements in Section 312000 "Earth Moving" for excavating, trenching, and backfilling.

1. If natural-gas piping is installed less than 36 inches below finished grade, install it in containment conduit.

C. Install underground, PE, natural-gas piping according to ASTM D 2774.

D. Steel Piping with Protective Coating:

1. Apply joint cover kits to pipe after joining to cover, seal, and protect joints.

E. Install fittings for changes in direction and branch connections.

F. Install pressure gage upstream and downstream from each service regulator. Pressure gages are specified in Section 220519 "Meters and Gages for plumbing Piping."

3.2 INDOOR PIPING INSTALLATION

A. Comply with the International Fuel Gas Code for installation and purging of natural-gas piping.

B. Drawing plans, schematics, and diagrams indicate general location and arrangement of piping systems. Indicated locations and arrangements are used to size pipe and calculate friction loss, expansion, and other design considerations. Install piping as indicated unless deviations to layout are approved on Coordination Drawings.

C. Arrange for pipe spaces, chases, slots, sleeves, and openings in building structure during progress of construction, to allow for mechanical installations.

D. Install piping in concealed locations unless otherwise indicated and except in equipment rooms and service areas.

E. Install piping indicated to be exposed and piping in equipment rooms and service areas at right angles or parallel to building walls. Diagonal runs are prohibited unless specifically indicated otherwise.

F. Install piping above accessible ceilings to allow sufficient space for ceiling panel removal.

G. Locate valves for easy access.

H. Install natural-gas piping at uniform grade of 2 percent down toward drip and sediment traps.

I. Install piping free of sags and bends.

J. Install fittings for changes in direction and branch connections.

K. Verify final equipment locations for roughing-in.

L. Comply with requirements in Sections specifying gas-fired appliances and equipment for roughing-in requirements.

M. Drips and Sediment Traps: Install drips at points where condensate may collect, including service-meter outlets. Locate where accessible to permit cleaning and emptying. Do not install

where condensate is subject to freezing.

1. Construct drips and sediment traps using tee fitting with bottom outlet plugged or capped. Use ipple a minimum length of 3 pipe diameters, but not less than 3 inches long and same size as connected pipe. Install with space below bottom of drip to remove plug or cap.

N. Conceal pipe installations in walls, pipe spaces, utility spaces, above ceilings, below grade or floors, and in floor channels unless indicated to be exposed to view.

O. Use eccentric reducer fittings to make reductions in pipe sizes. Install fittings with level side down.

P. Connect branch piping from top or side of horizontal piping.

Q. Install unions in pipes NPS 2 and smaller, adjacent to each valve, at final connection to each piece of equipment.

R. Do not use natural-gas piping as grounding electrode.

S. Install strainer on inlet of each line-pressure regulator and automatic or electrically operated valve.

T. Install pressure gage upstream and downstream from each line regulator. Pressure gages are specified in Section 220519 "Meters and Gages for plumbing Piping."

U. Install sleeves for piping penetrations of walls, ceilings, and floors. Comply with requirements for sleeves specified in Section 220517 "Sleeves and Sleeve Seals for plumbing Piping."

V. Install escutcheons for piping penetrations of walls, ceilings, and floors. Comply with requirements for escutcheons specified in Section 220518 "Escutcheons for plumbing Piping."

3.3 VALVE INSTALLATION

A. Install manual gas shutoff valve for each gas appliance ahead of corrugated stainless-steel tubing or copper connector.

B. Install underground valves with valve boxes.

C. Install regulators and overpressure protection devices with maintenance access space adequate for servicing and testing.

3.4 PIPING JOINT CONSTRUCTION

A. Ream ends of pipes and tubes and remove burrs.

B. Remove scale, slag, dirt, and debris from inside and outside of pipe and fittings before assembly.

C. Threaded Joints:

1. Thread pipe with tapered pipe threads complying with ASME B1.20.1.

2. Cut threads full and clean using sharp dies.

3. Ream threaded pipe ends to remove burrs and restore full inside diameter of pipe.

4. Apply appropriate tape or thread compound to external pipe threads unless dryseal threading is specified.

5. Damaged Threads: Do not use pipe or pipe fittings with threads that are corroded or damaged. Do not use pipe sections that have cracked or open welds.

3.5 HANGER AND SUPPORT INSTALLATION

A. Comply with requirements for seismic-restraint devices specified in Section 220548.13 "Vibration and Seismic Controls for plumbing and equipment."

B. Comply with requirements for pipe hangers and supports specified in Section 220529 "Hangers and Supports for plumbing Piping and Equipment."

C. Install hangers for steel piping, with maximum horizontal spacing and minimum rod diameter, to comply with MSS-58, locally enforced codes, and authorities having jurisdiction requirements, whichever are most stringent.

D. Install hangers for corrugated stainless-steel tubing, with maximum horizontal spacing and minimum rod diameter, to comply with manufacturer's written instructions, locally enforced codes, and authorities having jurisdiction requirements, whichever are most stringent.

E. Support horizontal piping within 12 inches of each fitting.

F. Support vertical runs of steel piping to comply with MSS-58, locally enforced codes, and authorities having jurisdiction requirements, whichever are most stringent.

G. Support vertical runs of corrugated stainless-steel tubing to comply with manufacturer's written instructions, locally enforced codes, and authorities having jurisdiction requirements, whichever are most stringent.

3.6 CONNECTIONS

A. Connect to utility's gas main according to utility's procedures and requirements.

B. Install natural-gas piping electrically continuous and bonded to gas appliance equipment grounding conductor of the circuit powering the appliance according to NFPA 70.

C. Install piping adjacent to appliances to allow service and maintenance of appliances.

D. Connect piping to appliances using manual gas shutoff valves and unions. Install valve within

72 inches of each gas-fired appliance and equipment. Install union between valve and

E. Sediment Traps: Install tee fitting with capped nipple in bottom to form drip, as close as practical to inlet of each appliance.

3. LABELING AND IDENTIFYING

A. Comply with requirements in Section 220553 "Identification for plumbing Piping and Equipment" for piping and valve identification.

B. Install detectable warning tape directly above gas piping, 12 inches below finished grade, except 6 inches below subgrade under pavements and slabs.

3. FIELD QUALITY CONTROL
8

A. Test, inspect, and purge natural gas according to the International Fuel Gas Code and authorities having jurisdiction.

B. Natural-gas piping will be considered defective if it does not pass tests and inspections.

C. Prepare test and inspection reports.

3. OUTDOOR PIPING SCHEDULE
9

A. Aboveground natural-gas piping shall be one of the following:

1. Steel pipe with malleable-iron fittings and threaded joints.

2. Steel pipe with wrought-steel fittings and welded joints.

3.10 INDOOR PIPING SCHEDULE

A. Aboveground, branch piping NPS 1 and smaller shall be one of the following:

1. Corrugated stainless-steel tubing with mechanical fittings having socket or threaded ends to match adjacent piping.

2. Steel pipe with malleable-iron fittings and threaded joints.

B. Aboveground, distribution piping shall be one of the following:

1. Steel pipe with malleable-iron fittings and threaded joints.

3.11 ABOVEGROUND MANUAL GAS SHUTOFF VALVE SCHEDULE

A. Valves for pipe sizes NPS 2 and smaller at service meter shall be one of the following:

1. Two-piece, full-port, bronze ball valves with bronze trim.

2. Bronze plug valve.

B. Distribution piping valves for pipe sizes NPS 2 and smaller shall be one of the following:

1. Two-piece, full-port, bronze ball valves with bronze trim.

2. Bronze plug valve.

C. Valves in branch piping for single appliance shall be one of the following:

1. Two-piece, full-port, bronze ball valves with bronze trim.

2. Bronze plug valve.

END OF SECTION

SECTION 23 23 00

REFRIGERANT PIPING

PART 1 - GENERAL

1.01 DESCRIPTION:

A. Provide refrigerant piping as indicated and in compliance with Contract Documents.

1.02 REFERENCES:

A. American National Standards Institute (ANSI):

1. B31.5: Refrigerant Piping.

B. American Society of Mechanical Engineers (ASME):

2. Code of Unfired Pressure Vessels

C. ASTM International (ASTM):

1. B88: Standard Specification for Seamless Copper Water Tube

2. B280: Standard Specification for Seamless Copper Tube for Air Conditioning and Refrigeration Field Service

D. Canadian Standards Association (CSA):

1. B52: Mechanical Refrigeration Code.

1.03 SUBMITTALS:

A. Submit the following shop drawings in accordance with Section 01 33 00.

B. Shop Drawings and Product Data: Submit shop drawings and product data sheets for all products specified in this section.

C. Refrigerant Piping Schematics: Submit a schematic piping diagram for each piping system, each diagram indicating pipe sizes, slopes equipment traps, valves and accessories.

D. Certification Reports: Submit letters from refrigeration equipment suppliers certifying proper start-up installation as specified in Part 3 of this specification.

1.04 QUALITY ASSURANCE:

A. Comply with the requirements specified in Section 01 40 00

1.05 DELIVERY STORAGE AND HANDLING:

A. Comply with the requirements specified by the manufacturer.

PART 2 - PRODUCTS

2.01 REFRIGERANT PIPE, FITTINGS AND JOINTS:

A. Type "L" hard drawn seamless copper tubing (ACR) to ASTM B88, factory cleaned in accordance with ASTM B280 and ANSI B31.5, pressurized or prepurged with nitrogen and supplied with capped ends, and complete with factory washed and capped wrought copper soldering fittings, and solder joints made with high melting point silver brazing alloy conforming to AWS Classification BCuP-5.

2.02 REFRIGERANT PIPING VALVES AND ACCESSORIES:

A. Meuller Brass Co. "Streamline" valves and accessories as follows:

1. Ball Type Shut-off Valves: "Ballmaster", 1/4 turn, CSA certified forged brass ball valves, each suitable for a maximum working pressure of 3445 kPa (485 psi), and complete with carbon filled teflon ball seals, two O-ring stem seals, a gasketed seal cap, a flow direction arrow cast into the body, a ball position indicator on the stem, and extended copper tube solder connections to permit soldering the valve into the line without disassembling the valve.

2. Diaphragm Type Shut-Off Valves: “Linemaster” forged brass, frost-proof, Type 1 Series, CSA certified packless diaphragm type line valves, each suitable for a maximum working pressure of 3445 kPa (485 psi), and each complete with an O-ring to prevent moisture from entering the diaphragm chamber, one phosphor bronze and two stainless steel diaphragms, and extended copper tube solder connections.

3. Check Valves: "Checkmaster" check valves, straight through type for valves 6.4 mm to 16 mm, globe type for valves 22 mm and larger, as follows:

a. Straight through type check valves are to be complete with a machined brass gasketed body, phosphor-bronze spring, neoprene seat, and extended copper tube solder connections.

b. Globe type check valves are to be complete with a cast bronze body, forged brass cap, phosphor-bronze spring, teflon seat disc, and neoprene O-ring seal.

4. Piping Traps: Style No. WE-554P solder end type copper “P” traps.

5. Pressure Vessel Relief Valves: "Safetymaster", factory set (relief pressure) refrigerant vessel pressure relief valves, straight-through or angle type as required,

each constructed in accordance with requirements of CSA B52, ANSI Code B31.5 and the ASME Code for Unfired Pressure Vessels, and each complete with a brass body, neoprene seat disc, and lead seal and locking wire.

6. Refrigerant Liquid-Moisture Indicators: "Vuemaster", forged brass, triple sealed, CSA certified liquid-moisture indictors, each suitable for a maximum working pressure of 3445 kPa (485 psi), and complete with a liquid indicator which shows “FULL” when the system is fully charged with refrigerant and remains blank when there is a restriction or shortage of refrigerant in the liquid line, a moisture indicator which changes from blue to pink when moisture is present in the system, a plastic dust cover, and extended copper tube solder connections.

7. Liquid Line Filter-Drier: "Drymaster Micro-Guard" CSA certified filter-driers, each suitable for a maximum working pressure of 3445 kPa (485 psi), and complete with a combination of desiccants in a fluted briquette for drying, and a fluted briquette type filter.

B. All refrigerant piping valves and accessories are to be factory cleaned, washed and supplied with capped ends.

2.03 REFRIGERANT PIPING FLEXIBLE CONNECTIONS:

A. Flexonics "VIBRA-SORBERS" or approved equivalent phosphor bronze construction, factory cleaned, dried and sealed flexible pipe connections with soldering ends.

PART 3 - EXECUTION

3.01 INSTALLATION:

A. Provide all required refrigerant piping. Pipe is to be type "L" hard copper, factory cleaned, capped, and marked "ACR".

B. All elbows are to be short radius elbows to allow for the installation of specified insulation and jacketing.

C. Refrigerant piping and direct expansion refrigeration equipment must be installed by skilled and qualified refrigeration mechanics.

D. The exact arrangement and installation of refrigerant piping is to be reviewed with and approved by the direct expansion refrigeration equipment manufacturer both prior to and after installation of the piping and equipment.

E. Make all refrigerant pipe solder joints using a light coat of an approved brazing flux applied to both pipe and fittings. Do not use an acid flux. During the soldering process, ensure that the pipe and fittings are kept full of nitrogen or carbon dioxide to prevent scale formation.

F. Provide shut-off valves to isolate each piece of equipment if shut-off valves are not supplied integral with the equipment. Shut-off valves inside the building are to be ball or diaphragm type. Shut-off valves outside the building are to be diaphragm type.

G. Provide a refrigerant charging valve for each system if such a valve is not supplied integral with equipment.

H. Provide all refrigerant piping system accessories shown. Install in accordance with the manufacturer's instructions. Provide all required refrigerant.

I. Provide flexible connections at piping connections to the roof mounted condensing unit. Install in accordance with the manufacturer's instructions.

3.02 CLOSEOUT ACTIVITIES:

A. Provide in accordance with Section 01 77 00.

END OF SECTION

SECTION 23 31 13

METAL DUCTS

PART 1 - GENERAL

1.1 SUMMARY

A. Section Includes:

1. Rectangular ducts and fittings.

2. Round ducts and fittings.

3. Sheet metal materials.

4. Sealants and gaskets.

5. Hangers and supports.

6. Seismic-restraint devices.

1.2 PERFORMANCE REQUIREMENTS

A. Delegated Duct Design: Duct construction, including sheet metal thicknesses, seam and joint construction, reinforcements, and hangers and supports, shall comply with SMACNA's "HVAC Duct Construction Standards - Metal and Flexible" and performance requirements and design criteria indicated in "Duct Schedule" Article.

B. Structural Performance: Duct hangers and supports shall withstand the effects of gravity loads and stresses within limits and under conditions described in SMACNA's "HVAC Duct Construction Standards - Metal and Flexible"

C. Airstream Surfaces: Surfaces in contact with the airstream shall comply with requirements in ASHRAE 62.1.

1.3 ACTION SUBMITTALS

A. Product Data: For each type of product indicated.

B. Shop Drawings:

1. Fabrication, assembly, and installation, including plans, elevations, sections, components, and attachments to other work.

2. Factory- and shop-fabricated ducts and fittings.

3. Duct layout indicating sizes, configuration, and static-pressure classes.

4. Elevation of top of ducts.

5. Dimensions of main duct runs from building grid lines.

6. Fittings.

7. Reinforcement and spacing.

8. Seam and joint construction.

9. Penetrations through fire-rated and other partitions.

10. Equipment installation based on equipment being used on Project.

11. Locations for duct accessories, including dampers, turning vanes, and access doors and panels.

12. Hangers and supports, including methods for duct and building attachment and vibration isolation.

1.4 INFORMATIONAL SUBMITTALS

A. Coordination Drawings: Plans, drawn to scale, on which the following items are shown and
coordinated with each other, using input from installers of the items involved:

1. Duct installation in congested spaces, indicating coordination with general construction, building components, and other building services. Indicate proposed changes to duct layout.

2. Suspended ceiling components.

3. Structural members to which duct will be attached.

4. Size and location of initial access modules for acoustical tile.

5. Penetrations of smoke barriers and fire-rated construction.

6. Items penetrating finished ceiling including the following:

a. Lighting
fixtures.

b. Air outlets and inlets.

c. Speakers.

d. Sprinklers.

e. Access panels.

f. Perimeter moldings.

1.5 QUALITY ASSURANCE

A. ASHRAE Compliance: Applicable requirements in ASHRAE 62.1, Section 5 - "Systems and Equipment" and Section 7 - "Construction and System Start-up."

B. ASHRAE/IESNA Compliance: Applicable requirements in ASHRAE/IESNA 90.1,
Section 6.4.4 - "HVAC System Construction and Insulation."

PART 2 - PRODUCTS

2.1 RECTANGULAR DUCTS AND FITTINGS

A. General Fabrication Requirements: Comply with SMACNA's "HVAC Duct Construction Standards - Metal and Flexible" based on indicated static-pressure class unless otherwise indicated.

B. Transverse Joints: Select joint types and fabricate according to SMACNA's "HVAC Duct Construction Standards - Metal and Flexible," Figure 2-1, "Rectangular Duct/Transverse Joints," for static-pressure class, applicable sealing requirements, materials involved, duct-support intervals, and other provisions in SMACNA's "HVAC Duct Construction Standards -Metal and Flexible."

C. Longitudinal Seams: Select seam types and fabricate according to SMACNA's "HVAC Duct Construction Standards - Metal and Flexible," Figure 2-2, "Rectangular Duct/Longitudinal Seams," for static-pressure class, applicable sealing requirements, materials involved, duct-support intervals, and other provisions in SMACNA's "HVAC Duct Construction Standards -Metal and Flexible."

D. Elbows, Transitions, Offsets, Branch Connections, and Other Duct Construction: Select types and fabricate according to SMACNA's "HVAC Duct Construction Standards - Metal and Flexible," Chapter 4, "Fittings and Other Construction," for static-pressure class, applicable sealing requirements, materials involved, duct-support intervals, and other provisions in SMACNA's "HVAC Duct Construction Standards - Metal and Flexible."

2.2 ROUND DUCTS AND FITTINGS

A. General Fabrication Requirements: Comply with SMACNA's "HVAC Duct Construction
Standards - Metal and Flexible," Chapter 3, "Round, Oval, and Flexible Duct," based on
indicated static-pressure class unless otherwise indicated.

1. Manufacturers: Subject to compliance with requirements, provide products by one of the
following:

a. Lindab Inc.

b. McGill AirFlow LLC.

c. SEMCO Incorporated.

d. Sheet Metal Connectors, Inc.

e. Spiral Manufacturing Co., Inc.

B. Transverse Joints: Select joint types and fabricate according to SMACNA's "HVAC Duct Construction Standards - Metal and Flexible," Figure 3-1, "Round Duct Transverse Joints," for static-pressure class, applicable sealing requirements, materials involved, duct-support intervals, and other provisions in SMACNA's "HVAC Duct Construction Standards - Metal and Flexible."

C. Longitudinal Seams: Select seam types and fabricate according to SMACNA's "HVAC Duct Construction Standards - Metal and Flexible," Figure 3-2, "Round Duct Longitudinal Seams," for static-pressure class, applicable sealing requirements, materials involved, duct-support intervals, and other provisions in SMACNA's "HVAC Duct Construction Standards - Metal and Flexible."

D. Tees and Laterals: Select types and fabricate according to SMACNA's "HVAC Duct Construction Standards - Metal and Flexible," Figure 3-5, "90 Degree Tees and Laterals," and Figure 3-6, "Conical Tees," for static-pressure class, applicable sealing requirements, materials involved, duct-support intervals, and other provisions in SMACNA's "HVAC Duct Construction Standards - Metal and Flexible."

2.3 SHEET METAL MATERIALS

A. General Material Requirements: Comply with SMACNA's "HVAC Duct Construction Standards - Metal and Flexible" for acceptable materials, material thicknesses, and duct construction methods unless otherwise indicated. Sheet metal materials shall be free of pitting, seam marks, roller marks, stains, discolorations, and other imperfections.

B. Galvanized Sheet Steel: Comply with ASTM A 653/A 653M.

1. Galvanized Coating Designation: G60 (Z180).

2. Finishes for Surfaces Exposed to View: Mill phosphatized.

C. Carbon-Steel Sheets: Comply with ASTM A 1008/A 1008M, with oiled, matte finish for exposed ducts.

D. Stainless-Steel Sheets: Comply with ASTM A 480/A 480M, Type 304 or 316, as indicated in the "Duct Schedule" Article; cold rolled, annealed, sheet. Exposed surface finish shall be No. 2B, No. 2D, No. 3, or No. 4 as indicated in the "Duct Schedule" Article.

E. Aluminum Sheets: Comply with ASTM B 209 (ASTM B 209M) Alloy 3003, H14 temper; with mill finish for concealed ducts, and standard, one-side bright finish for duct surfaces exposed to view.

F. Reinforcement Shapes and Plates: ASTM A 36/A 36M, steel plates, shapes, and bars; black and galvanized.

1. Where black- and galvanized-steel shapes and plates are used to reinforce aluminum ducts, isolate the different metals with butyl rubber, neoprene, or EPDM gasket materials.

G. Tie Rods: Galvanized steel, 1/4-inch (6-mm) minimum diameter for lengths 36 inches (900 mm) or less; 3/8-inch (10-mm) minimum diameter for lengths longer than 36 inches (900 mm).

2.4 SEALANT AND GASKETS

A. General Sealant and Gasket Requirements: Surface-burning characteristics for sealants and gaskets shall be a maximum flame-spread index of 25 and a maximum smoke-developed index of 50 when tested according to UL 723; certified by an NRTL.

B. Two-Part Tape Sealing System:

1. Tape: Woven cotton fiber impregnated with mineral gypsum and modified acrylic/silicone activator to react exothermically with tape to form hard, durable, airtight seal.

2. Tape Width: 3 inches (76 mm).

3. Sealant: Modified styrene acrylic.

4. Water resistant.

5. Mold and mildew resistant.

6. Maximum Static-Pressure Class: 10-inch wg (2500 Pa), positive and negative.

7. Service: Indoor and outdoor.

8. Service Temperature: Minus 40 to plus 200 deg F (Minus 40 to plus 93 deg C).

9. Substrate: Compatible with galvanized sheet steel (both PVC coated and bare), stainless steel, or aluminum.

10. For indoor applications, sealant shall have a VOC content of 250 g/L or less when calculated according to 40 CFR 59, Subpart D (EPA Method 24).

11. Sealant shall comply with the testing and product requirements of the California Department of Health Services' "Standard Practice for the Testing of Volatile Organic Emissions from Various Sources Using Small-Scale Environmental Chambers."

C. Water-Based Joint and Seam Sealant:

1. Application Method: Brush on.

2. Solids Content: Minimum 65 percent.

3. Shore A Hardness: Minimum 20.

4. Water resistant.

5. Mold and mildew resistant.

6. VOC: Maximum 75 g/L (less water).

7. Maximum Static-Pressure Class: 10-inch wg (2500 Pa), positive and negative.

8. Service: Indoor or outdoor.

9. Substrate: Compatible with galvanized sheet steel (both PVC coated and bare), stainless steel, or aluminum sheets.

D. Flanged Joint Sealant: Comply with ASTM C 920.

1. General: Single-component, acid-curing, silicone, elastomeric.

2. Type: S.

3. Grade: NS.

4. Class: 25.

5. Use: O.

6. For indoor applications, sealant shall have a VOC content of 250 g/L or less when calculated according to 40 CFR 59, Subpart D (EPA Method 24).

7. Sealant shall comply with the testing and product requirements of the California

8. Department of Health Services' "Standard Practice for the Testing of Volatile Organic Emissions from Various Sources Using Small-Scale Environmental Chambers."

E. Flange Gaskets: Butyl rubber, neoprene, or EPDM polymer with polyisobutylene plasticizer.

F. Round Duct Joint O-Ring Seals:

1. Seal shall provide maximum leakage class of3 cfm/100 sq. ft. at 1-inch wg (0.14 L/s per sq. m) and shall be rated for10-inch wg (2500-Pa) static-pressure class, positive or negative.

2. EPDM O-ring to seal in concave bead in coupling or fitting spigot.

3. Double-lipped, EPDM O-ring seal, mechanically fastened to factory-fabricated couplings and fitting spigots.

2.5 HANGERS AND SUPPORTS

A. Hanger Rods for Noncorrosive Environments: Cadmium-plated steel rods and nuts.

B. Hanger Rods for Corrosive Environments: Electrogalvanized, all-thread rods or galvanized rods with threads painted with zinc-chromate primer after installation.

C. Strap and Rod Sizes: Comply with SMACNA's "HVAC Duct Construction Standards - Metal and Flexible," Table 5-1 (Table 5-1M), "Rectangular Duct Hangers Minimum Size," and Table 5-2, "Minimum Hanger Sizes for Round Duct."

D. Steel Cables for Galvanized-Steel Ducts: Galvanized steel complying with ASTM A 603.

E. Steel Cables for Stainless-Steel Ducts: Stainless steel complying with ASTM A 492.

F. Steel Cable End Connections: Cadmium-plated steel assemblies with brackets, swivel, and bolts designed for duct hanger service; with an automatic-locking and clamping device.

G. Duct Attachments: Sheet metal screws, blind rivets, or self-tapping metal screws; compatible with duct materials.

H. Trapeze and Riser Supports:

1. Supports for Galvanized-Steel Ducts: Galvanized-steel shapes and plates.

2. Supports for Stainless-Steel Ducts: Stainless-steel shapes and plates.

3. Supports for Aluminum Ducts: Aluminum or galvanized steel coated with zinc chromate.

PART 3 - EXECUTION

3.1 DUCT INSTALLATION

A. Drawing plans, schematics, and diagrams indicate general location and arrangement of duct system. Indicated duct locations, configurations, and arrangements were used to size ducts and calculate friction loss for air-handling equipment sizing and for other design considerations. Install duct systems as indicated unless deviations to layout are approved on Shop Drawings and Coordination Drawings.

B. Install ducts according to SMACNA's "HVAC Duct Construction Standards - Metal and Flexible" unless otherwise indicated.

C. Install round ducts in maximum practical lengths.

D. Install ducts with fewest possible joints.

E. Install factory- or shop-fabricated fittings for changes in direction, size, and shape and for branch connections.

F. Unless otherwise indicated, install ducts vertically and horizontally, and parallel and perpendicular to building lines.

G. Install ducts close to walls, overhead construction, columns, and other structural and permanent enclosure elements of building.

H. H. Install ducts with a clearance of 1 inch (25 mm), plus allowance for insulation

thickness.

I. Route ducts to avoid passing through transformer vaults and electrical equipment rooms and enclosures.

J. Where ducts pass through non-fire-rated interior partitions and exterior walls and are exposed to view, cover the opening between the partition and duct or duct insulation with sheet metal flanges of same metal thickness as the duct. Overlap openings on four sides by at least 1-1/2 inches (38 mm).

K. Where ducts pass through fire-rated interior partitions and exterior walls, install fire dampers. Comply with requirements in Section 233300 "Air Duct Accessories" for fire and smoke dampers.

L. Protect duct interiors from moisture, construction debris and dust, and other foreign materials. Comply with SMACNA's "IAQ Guidelines for Occupied Buildings Under Construction," Appendix G, "Duct Cleanliness for New Construction Guidelines."

3.2 INSTALLATION OF EXPOSED DUCTWORK

A. Protect ducts exposed in finished spaces from being dented, scratched, or damaged.

B. Trim duct sealants flush with metal. Create a smooth and uniform exposed bead. Do not use two-part tape sealing system.

C. Grind welds to provide smooth surface free of burrs, sharp edges, and weld splatter. When welding stainless steel with a No. 3 or 4 finish, grind the welds flush, polish the exposed welds, and treat the welds to remove discoloration caused by welding.

D. Maintain consistency, symmetry, and uniformity in the arrangement and fabrication of fittings, hangers and supports, duct accessories, and air outlets.

E. Repair or replace damaged sections and finished work that does not comply with these requirements.

3.3 DUCT SEALING

A. Seal ducts for duct static-pressure, seal classes, and leakage classes specified in "Duct
Schedule" Article according to SMACNA's "HVAC Duct Construction Standards - Metal and
Flexible."

B. Seal ducts to the following seal classes according to SMACNA's "HVAC Duct Construction
Standards - Metal and Flexible":

1. Comply with SMACNA's "HVAC Duct Construction Standards - Metal and Flexible."

2. Outdoor, Supply-Air Ducts: Seal Class A.

3. Outdoor, Exhaust Ducts: Seal Class C.

4. Outdoor, Return-Air Ducts: Seal Class C.

5. Unconditioned Space, Supply-Air Ducts in Pressure Classes 2-Inch wg (500 Pa) and Lower: Seal Class B.

6. Unconditioned Space, Supply-Air Ducts in Pressure Classes Higher Than 2-Inch wg (500
Pa): Seal Class A.

7. Unconditioned Space, Exhaust Ducts: Seal Class C.

8. Unconditioned Space, Return-Air Ducts: Seal Class B.

9. Conditioned Space, Supply-Air Ducts in Pressure Classes 2-Inch wg (500 Pa) and Lower: Seal Class C.

10. Conditioned Space, Supply-Air Ducts in Pressure Classes Higher Than 2-Inch wg (500 Pa): Seal Class B.

11. Conditioned Space, Exhaust Ducts: Seal Class B.

12. Conditioned Space, Return-Air Ducts: Seal Class C.

3.4 HANGER AND SUPPORT INSTALLATION

A. Comply with SMACNA's "HVAC Duct Construction Standards - Metal and Flexible," Chapter 5, "Hangers and Supports."

B. Building Attachments: Concrete inserts, powder-actuated fasteners, or structural-steel fasteners appropriate for construction materials to which hangers are being attached.

1. Where practical, install concrete inserts before placing concrete.

2. Install powder-actuated concrete fasteners after concrete is placed and completely cured.

3. Use powder-actuated concrete fasteners for standard-weight aggregate concretes or for slabs more than 4 inches (100 mm) thick.

4. Do not use powder-actuated concrete fasteners for lightweight-aggregate concretes or for slabs less than 4 inches (100 mm) thick.

5. Do not use powder-actuated concrete fasteners for seismic restraints.

C. Hanger Spacing: Comply with SMACNA's "HVAC Duct Construction Standards - Metal and Flexible," Table 5-1 (Table 5-1M), "Rectangular Duct Hangers Minimum Size," and Table 5-2, "Minimum Hanger Sizes for Round Duct," for maximum hanger spacing; install hangers and supports within 24 inches (610 mm) of each elbow and within 48 inches (1200 mm) of each branch intersection.

D. Hangers Exposed to View: Threaded rod and angle or channel supports.

E. Support vertical ducts with steel angles or channel secured to the sides of the duct with welds, bolts, sheet metal screws, or blind rivets; support at each floor and at a maximum interval of 16 feet (5 m).

F. Install upper attachments to structures. Select and size upper attachments with pull-out, tension, and shear capacities appropriate for supported loads and building materials where used.

3.5 CONNECTIONS

A. Make connections to equipment with flexible connectors complying with Section 233300 "Air
Duct Accessories."

B. Comply with SMACNA's "HVAC Duct Construction Standards - Metal and Flexible" for
branch, outlet and inlet, and terminal unit connections.

3.6 DUCT CLEANING

A. Clean new duct system(s) before testing, adjusting, and balancing.

B. Use service openings for entry and inspection.

1. Create new openings and install access panels appropriate for duct static-pressure class if required for cleaning access. Provide insulated panels for insulated or lined duct. Patch insulation and liner as recommended by duct liner manufacturer. Comply with Section 233300 "Air Duct Accessories" for access panels and doors.

2. Disconnect and reconnect flexible ducts as needed for cleaning and inspection.

3. Remove and reinstall ceiling to gain access during the cleaning process.

C. Particulate Collection and Odor Control:

1. When venting vacuuming system inside the building, use HEPA filtration with 99.97 percent collection efficiency for 0.3-micron-size (or larger) particles.

2. When venting vacuuming system to outdoors, use filter to collect debris removed from HVAC system, and locate exhaust downwind and away from air intakes and other points of entry into building.

D. Clean the following components by removing surface contaminants and deposits:

1. Air outlets and inlets (registers, grilles, and diffusers).

2. Supply, return, and exhaust fans including fan housings, plenums (except ceiling supply and return plenums), scrolls, blades or vanes, shafts, baffles, dampers, and drive assemblies.

3. Air-handling unit internal surfaces and components including mixing box, coil section,

air wash systems, spray eliminators, condensate drain pans, humidifiers and dehumidifiers, filters and filter sections, and condensate collectors and drains.

4. Coils and related components.

5. Return-air ducts, dampers, actuators, and turning vanes except in ceiling plenums and mechanical equipment rooms.

6. Supply-air ducts, dampers, actuators, and turning vanes.

7. Dedicated exhaust and ventilation components and makeup air systems.

E. Mechanical Cleaning Methodology:

1. Clean metal duct systems using mechanical cleaning methods that extract contaminants from within duct systems and remove contaminants from building.

2. Use vacuum-collection devices that are operated continuously during cleaning. Connect vacuum device to downstream end of duct sections so areas being cleaned are under negative pressure.

3. Use mechanical agitation to dislodge debris adhered to interior duct surfaces without damaging integrity of metal ducts, duct liner, or duct accessories.

4. Clean fibrous-glass duct liner with HEPA vacuuming equipment; do not permit duct liner to get wet. Replace fibrous-glass duct liner that is damaged, deteriorated, or delaminated or that has friable material, mold, or fungus growth.

5. Clean coils and coil drain pans according to NADCA 1992. Keep drain pan operational. Rinse coils with clean water to remove latent residues and cleaning materials; comb and straighten fins.

6. Provide drainage and cleanup for wash-down procedures.

7. Antimicrobial Agents and Coatings: Apply EPA-registered antimicrobial agents if fungus is present. Apply antimicrobial agents according to manufacturer's written instructions after removal of surface deposits and debris.

3.7 START UP

A. Air Balance: Comply with requirements in Section 230593 "Testing, Adjusting, and Balancing
for HVAC."

3.8 DUCT SCHEDULE

A. Fabricate ducts with galvanized sheet steel except as otherwise indicated and as follows:

B. Supply Ducts:

1. Ducts Connected to Fan Coil Units, Heat Pumps, and Terminal Units:

a. Pressure Class: Positive 2-inch wg (500 Pa).

b. Minimum SMACNA Seal Class: A.

c. SMACNA Leakage Class for Rectangular: 12.

d. SMACNA Leakage Class for Round and Flat Oval: 12.

C. Return / Outdoor Air Ducts:

1. Ducts Connected to Fan Coil Units, Heat Pumps, and Terminal Units:

a. Pressure Class: Positive or negative 2-inch wg (500 Pa).

b. Minimum SMACNA Seal Class: A.

c. SMACNA Leakage Class for Rectangular: 12.

d. SMACNA Leakage Class for Round and Flat Oval: 12.

D. Exhaust Ducts:

1. Ducts Connected to Fans Exhausting (ASHRAE 62.1, Class 1 and 2) Air:

a. Pressure Class: Negative 1-inch wg (250 Pa).

b. Minimum SMACNA Seal Class: A if negative pressure, and A if positive pressure.

c. SMACNA Leakage Class for Rectangular: 12.

d. SMACNA Leakage Class for Round and Flat Oval: 12.

E. Intermediate Reinforcement:

1. Galvanized-Steel Ducts: Galvanized steel.

2. PVC-Coated Ducts:

a. Exposed to Airstream: Match duct material.

b. Not Exposed to Airstream: Galvanized.

3. Stainless-Steel Ducts:

a. Exposed to Airstream: Match duct material.

b. Not Exposed to Airstream: Galvanized.

4. Aluminum Ducts: Aluminum.

F. Elbow Configuration:

1. Rectangular Duct: Comply with SMACNA's "HVAC Duct Construction Standards -
Metal and Flexible," Figure 4-2, "Rectangular Elbows."

a. Velocity 1000 fpm (5 m/s) or Lower:

1) Radius Type RE 1 with minimum 0.5 radius-to-diameter ratio.

2) Mitered Type RE 4 without vanes.

b. Velocity 1000 to 1500 fpm (5 to 7.6 m/s):

1) Radius Type RE 1 with minimum 1.0 radius-to-diameter ratio.

2) Radius Type RE 3 with minimum 0.5 radius-to-diameter ratio and two vanes.

3) Mitered Type RE 2 with vanes complying with SMACNA's "HVAC Duct Construction Standards - Metal and Flexible," Figure 4-3, "Vanes and Vane Runners," and Figure 4-4, "Vane Support in Elbows."

c. Velocity 1500 fpm (7.6 m/s) or Higher:

1) Radius Type RE 1 with minimum 1.5 radius-to-diameter ratio.

2) Radius Type RE 3 with minimum 1.0 radius-to-diameter ratio and two vanes.

3) Mitered Type RE 2 with vanes complying with SMACNA's "HVAC Duct Construction Standards - Metal and Flexible," Figure 4-3, "Vanes and Vane Runners," and Figure 4-4, "Vane Support in Elbows."

2. Rectangular Duct: Comply with SMACNA's "HVAC Duct Construction Standards -
Metal and Flexible," Figure 4-2, "Rectangular Elbows."

a. Radius Type RE 1 with minimum 1.5 radius-to-diameter ratio.

b. Radius Type RE 3 with minimum 1.0 radius-to-diameter ratio and two vanes.

c. Mitered Type RE 2 with vanes complying with SMACNA's "HVAC Duct Construction Standards - Metal and Flexible," Figure 4-3, "Vanes and Vane Runners," and Figure 4-4, "Vane Support in Elbows."

3. Round Duct: Comply with SMACNA's "HVAC Duct Construction Standards - Metal
and Flexible," Figure 3-4, "Round Duct Elbows."

a. Minimum Radius-to-Diameter Ratio and Elbow Segments: Comply with SMACNA's "HVAC Duct Construction Standards - Metal and Flexible," Table 3-1, "Mitered Elbows." Elbows with less than 90-degree change of direction have proportionately fewer segments.

1) Velocity 1000 fpm (5 m/s) or Lower: 0.5 radius-to-diameter ratio and three segments for 90-degree elbow.

2) Velocity 1000 to 1500 fpm (5 to 7.6 m/s): 1.0 radius-to-diameter ratio and four segments for 90-degree elbow.

3) Velocity 1500 fpm (7.6 m/s) or Higher: 1.5 radius-to-diameter ratio and five segments for 90-degree elbow.

4) Radius-to Diameter Ratio: 1.5.

b. Round Elbows, 12 Inches (305 mm) and Smaller in Diameter: Stamped or pleated.

c. Round Elbows, 14 Inches (356 mm) and Larger in Diameter: Standing seam.

G. Branch Configuration:

1. Rectangular Duct: Comply with SMACNA's "HVAC Duct Construction Standards -Metal and Flexible," Figure 4-6, "Branch Connection."

a. Rectangular Main to Rectangular Branch: 45-degree entry.

b. Rectangular Main to Round Branch: Spin in.

2. Round: Comply with SMACNA's "HVAC Duct Construction Standards - Metal and Flexible," Figure 3-5, "90 Degree Tees and Laterals," and Figure 3-6, "Conical Tees." Saddle taps are permitted in existing duct.

a. Velocity 1000 fpm (5 m/s) or Lower: 90-degree tap.

b. Velocity 1000 to 1500 fpm (5 to 7.6 m/s): Conical tap.

c. Velocity 1500 fpm (7.6 m/s) or Higher: 45-degree lateral.

END OF SECTION

SECTION 23 33 00

AIR DUCT ACCESSORIES

PART 1 - GENERAL

1.1 SUMMARY

A. Section Includes:

1. Backdraft and pressure relief dampers.
2. Manual volume dampers.
3. Control dampers.
4. Fire dampers.
5. Smoke dampers.
6. Flange connectors.
7. Turning vanes.
8. Duct-mounted access doors.
9. Flexible connectors.
10. Flexible ducts.
11. Duct accessory hardware.

1.2 ACTION SUBMITTALS

A. Product Data: For each type of product.

B. Shop Drawings: For duct accessories. Include plans, elevations, sections, details and attachments to other work.

1. Detail duct accessories fabrication and installation in ducts and other construction.
   Include dimensions, weights, loads, and required clearances; and method of field
   assembly into duct systems and other construction. Include the following:

   a) Special fittings.

b) Manual volume damper installations.

c) Control-damper installations.

d) Fire-damper and smoke-damper installations, including sleeves; and duct-mounted access doors.

1.3 CLOSEOUT SUBMITTALS

A. Operation and maintenance data.

PART 2 - PRODUCTS

2.1 ASSEMBLY DESCRIPTION

A. Comply with NFPA 90A, "Installation of Air Conditioning and Ventilating Systems," and with NFPA 90B, "Installation of Warm Air Heating and Air Conditioning Systems."

B. Comply with SMACNA's "HVAC Duct Construction Standards - Metal and Flexible" for acceptable materials, material thicknesses, and duct construction methods unless otherwise indicated. Sheet metal materials shall be free of pitting, seam marks, roller marks, stains, discolorations, and other imperfections.

2.2 MATERIALS

A. Galvanized Sheet Steel: Comply with ASTM A 653/A 653M.

1. Galvanized Coating Designation: G60 (Z180).

2. Exposed-Surface Finish: Mill phosphatized.

B. Stainless-Steel Sheets: Comply with ASTM A 480/A 480M, Type 304, and having a No. 2 finish for concealed ducts.

C. Aluminum Sheets: Comply with ASTM B 209 (ASTM B 209M), Alloy 3003, Temper H14; with mill finish for concealed ducts and standard, 1-side bright finish for exposed ducts.

D. Extruded Aluminum: Comply with ASTM B 221 (ASTM B 221M), Alloy 6063, Temper T6.

E. Reinforcement Shapes and Plates: Galvanized-steel reinforcement where installed on
galvanized sheet metal ducts; compatible materials for aluminum and stainless-steel ducts.

F. Tie Rods: Galvanized steel, 1/4-inch (6-mm) minimum diameter for lengths 36 inches (900
mm) or less; 3/8-inch (10-mm) minimum diameter for lengths longer than 36 inches (900 mm).

2.3 BACKDRAFT AND PRESSURE RELIEF DAMPERS

A. Manufacturers: Subject to compliance with requirements, provide products by one of the
following:

1. Air Balance Inc.; a division of Mestek, Inc.
2. American Warming and Ventilating; a division of Mestek, Inc.
3. Cesco Products; a division of Mestek, Inc.
4. Greenheck Fan Corporation.
5. Lloyd Industries, Inc.
6. Nailor Industries Inc.
7. NCA Manufacturing, Inc.
8. Pottorff.
9. Ruskin Company.
10. Vent Products Company, Inc.

B. Description: Gravity balanced.

C. Maximum Air Velocity: 1000 fpm (5.1 m/s).

D. Maximum System Pressure: 1-inch wg (0.25 kPa).

E. Frame: Hat-shaped, 0.05-inch- (1.3-mm-) thick, galvanized sheet steel, with welded corners or

mechanically attached and mounting flange.

F. Blades: Multiple single-piece blades, center pivoted, maximum 6-inch (150-mm) width, 0.025-inch- (0.6-mm-) thick, roll-formed aluminum with sealed edges.

G. Blade Action: Parallel.

H. Blade Seals: Extruded vinyl, mechanically locked.

I. Blade Axles:

1. Material: Galvanized steel.

2. Diameter: 0.20 inch (5 mm).

J. Tie Bars and Brackets: Aluminum.

K. Return Spring: Adjustable tension.

L. Bearings: Steel ball or synthetic pivot bushings.

M. Accessories:

1. Adjustment device to permit setting for varying differential static pressure.

2. Counterweights and spring-assist kits for vertical airflow installations.

3. 90-degree stops.

2.4 MANUAL VOLUME DAMPERS

A. Standard, Steel, Manual Volume Dampers:

1. Manufacturers: Subject to compliance with requirements, provide products by one of the following:

a. American Warming and Ventilating; a division of Mestek, Inc.

b. Flexmaster U.S.A., Inc.

c. McGill AirFlow LLC.

d. Nailor Industries Inc.

e. Pottorff.

f. Ruskin Company.

g. Trox USA Inc.

h. Vent Products Company, Inc.

2. Standard leakage rating.

3. Suitable for horizontal or vertical applications.

4. Frames:

a. Frame: Hat-shaped, 0.094-inch- (2.4-mm-) thick, galvanized sheet steel.

b. Mitered and welded corners.

c. Flanges for attaching to walls and flangeless frames for installing in ducts.

5. Blades:

a. Multiple or single blade.

b. Parallel- or opposed-blade design.

c. Stiffen damper blades for stability.

d. Galvanized-steel, 0.064 inch (1.62 mm) thick.

6. Blade Axles: Galvanized steel.

7. Bearings:

a. Oil-impregnated stainless-steel sleeve.

b. Dampers in ducts with pressure classes of 3-inch wg (750 Pa) or less shall have axles full length of damper blades and bearings at both ends of operating shaft.

8. Tie Bars and Brackets: Galvanized steel.

B. Jackshaft:

1. Size: 0.5-inch (13-mm) diameter.

2. Material: Galvanized-steel pipe rotating within pipe-bearing assembly mounted on supports at each mullion and at each end of multiple-damper assemblies.

3. Length and Number of Mountings: As required to connect linkage of each damper in multiple-damper assembly.

C. Damper Hardware:

1. Zinc-plated, die-cast core with dial and handle made of 3/32-inch- (2.4-mm-) thick zinc-
plated steel, and a 3/4-inch (19-mm) hexagon locking nut.

2. Include center hole to suit damper operating-rod size.

3. Include elevated platform for insulated duct mounting.

2.5 CONTROL DAMPERS

A. Manufacturers: Subject to compliance with requirements, provide products by one of the
following:

1. American Warming and Ventilating; a division of Mestek, Inc.

2. Arrow United Industries; a division of Mestek, Inc.

3. Cesco Products; a division of Mestek, Inc.

4. Greenheck Fan Corporation.

5. Lloyd Industries, Inc.

6. McGill AirFlow LLC.

7. Metal Form Manufacturing, Inc.

8. Nailor Industries Inc.

9. NCA Manufacturing, Inc.

10. Pottorff.

11. Ruskin Company.

12. Vent Products Company, Inc.

13. Young Regulator Company.

B. Frames:

1. Hat shaped.

2. 0.094-inch- (2.4-mm-) thick, galvanized sheet steel.

3. Mitered and welded corners.

C. Blades:

1. Multiple blade with maximum blade width of 6 inches (152 mm).

2. Opposed-blade design.

3. Galvanized-steel.

4. 0.064 inch (1.62 mm) thick single skin or 0.0747-inch- (1.9-mm-) thick dual skin.

5. Blade Edging: Closed-cell neoprene.

6. Blade Edging: Inflatable seal blade edging, or replaceable rubber seals.

D. Blade Axles: 1/2-inch- (13-mm-) diameter; galvanized steel; blade-linkage hardware of zinc-plated steel and brass; ends sealed against blade bearings.

1. Operating Temperature Range: From minus 40 to plus 200 deg F (minus 40 to plus 93 deg C).

E. Bearings:

1. Oil-impregnated stainless-steel sleeve.

2. Dampers in ducts with pressure classes of 3-inch wg (750 Pa) or less shall have axles full length of damper blades and bearings at both ends of operating shaft.

3. Thrust bearings at each end of every blade.

2.6 FIRE DAMPERS

A. Manufacturers: Subject to compliance with requirements, provide products by one of the following:

1. Air Balance Inc.; a division of Mestek, Inc.

2. Arrow United Industries; a division of Mestek, Inc.

3. Cesco Products; a division of Mestek, Inc.
4. Greenheck Fan Corporation.
5. Nailor Industries Inc.
6. NCA Manufacturing, Inc.
7. Pottorff.
8. Prefco; Perfect Air Control, Inc.
9. Ruskin Company.
10. Vent Products Company, Inc.
11. Ward Industries, Inc.; a division of Hart & Cooley, Inc.

B. Type: Dynamic; rated and labeled according to UL 555 by an NRTL.

C. Closing rating in ducts up to 4-inch wg (1-kPa) static pressure class and minimum 2000-fpm (10-m/s) velocity.

D. Fire Rating: 1-1/2 hours.

E. Frame: Curtain type with blades outside airstream; fabricated with roll-formed, 0.034-inch- (0.85-mm-) thick galvanized steel; with mitered and interlocking corners.

F. Mounting Sleeve: Factory- or field-installed, galvanized sheet steel.

1. Minimum Thickness: 0.05 (1.3 mm) thick, as indicated, and of length to suit application.
2. Exception: Omit sleeve where damper-frame width permits direct attachment of perimeter mounting angles on each side of wall or floor; thickness of damper frame must comply with sleeve requirements.

G. Mounting Orientation: Vertical or horizontal as indicated.

H. Blades: Roll-formed, interlocking, 0.024-inch- (0.61-mm) thick, galvanized sheet steel. In place of interlocking blades, use full-length, 0.034-inch- (0.85-mm-) thick, galvanized-steel blade connectors.

I. Horizontal Dampers: Include blade lock and stainless-steel closure spring.

J. Heat-Responsive Device: Replaceable, 165 deg F (74 deg C) rated, fusible links.

2.7 FLANGE CONNECTORS

A. Manufacturers: Subject to compliance with requirements, provide products by one of the following:

1. Ductmate Industries, Inc.
2. Nexus PDQ; Division of Shilco Holdings Inc.
3. Ward Industries, Inc.; a division of Hart & Cooley, Inc.

B. Description: Add-on or roll-formed, factory-fabricated, slide-on transverse flange connectors, gaskets, and components.

C. Material: Galvanized steel.

D. Gage and Shape: Match connecting ductwork.

2.8 TURNING VANES

A. Manufacturers: Subject to compliance with requirements, provide products by one of the following:

1. Ductmate Industries, Inc.
2. Duro Dyne Inc.
3. Elgen Manufacturing.
4. METALAIRE, Inc.
5. SEMCO Incorporated.
6. Ward Industries, Inc.; a division of Hart & Cooley, Inc.

B. Manufactured Turning Vanes for Metal Ducts: Curved blades of galvanized sheet steel; support with bars perpendicular to blades set; set into vane runners suitable for duct mounting.

1. Acoustic Turning Vanes: Fabricate airfoil-shaped aluminum extrusions with perforated faces and fibrous-glass fill.

C. Manufactured Turning Vanes for Nonmetal Ducts: Fabricate curved blades of resin-bonded fiberglass with acrylic polymer coating; support with bars perpendicular to blades set; set into vane runners suitable for duct mounting.

D. General Requirements: Comply with SMACNA's "HVAC Duct Construction Standards - Metal and Flexible"; Figures 4-3, "Vanes and Vane Runners," and 4-4, "Vane Support in Elbows."

E. Vane Construction: Double wall.

2.9 DUCT-MOUNTED ACCESS DOORS

A. Manufacturers: Subject to compliance with requirements, provide products by one of the following:

1. American Warming and Ventilating; a division of Mestek, Inc.
2. Cesco Products; a division of Mestek, Inc.
3. Ductmate Industries, Inc.
4. Elgen Manufacturing.
5. Flexmaster U.S.A., Inc.
6. Greenheck Fan Corporation.
7. McGill AirFlow LLC.
8. Nailor Industries Inc.
9. Pottorff.
10. Ventfabrics, Inc.
11. Ward Industries, Inc.; a division of Hart & Cooley, Inc.

B. Duct-Mounted Access Doors: Fabricate access panels according to SMACNA's "HVAC Duct Construction Standards - Metal and Flexible"; Figures 7-2 (7-2M), "Duct Access Doors and Panels," and 7-3, "Access Doors - Round Duct."

1. Door:

    a. Double wall, rectangular.

    b. Galvanized sheet metal with insulation fill and thickness as indicated for duct pressure class.

    c. Vision panel.

    d. Hinges and Latches: 1-by-1-inch (25-by-25-mm) butt or piano hinge and cam latches.

    e. Fabricate doors airtight and suitable for duct pressure class.

2. Frame: Galvanized sheet steel, with bend-over tabs and foam gaskets.

3. Number of Hinges and Locks:

    a. Access Doors Less Than 12 Inches (300 mm) Square: No hinges and two sash locks.

    b. Access Doors up to 18 Inches (460 mm) Square: Continuous and two sash locks.

2.10 DUCT ACCESS PANEL ASSEMBLIES

A. Manufacturers: Subject to compliance with requirements, provide products by one of the following:

1. Ductmate Industries, Inc.

2. Flame Gard, Inc.

3. 3M.

B. Labeled according to UL 1978 by an NRTL.

C. Panel and Frame: Minimum thickness 0.0528-inch (1.3-mm) carbon steel.

D. Fasteners: Stainless steel. Panel fasteners shall not penetrate duct wall.

E. Gasket: Comply with NFPA 96; grease-tight, high-temperature ceramic fiber, rated for minimum 2000 deg F (1093 deg C).

F. Minimum Pressure Rating: 10-inch wg (2500 Pa), positive or negative.

2.11 FLEXIBLE CONNECTORS

A. Manufacturers: Subject to compliance with requirements, provide products by one of the following:

1. Ductmate Industries, Inc.

2. Duro Dyne Inc.

3. Elgen Manufacturing.

4. Ventfabrics, Inc. Ward Industries, Inc.; a division of Hart & Cooley, Inc.

B. Materials: Flame-retardant or noncombustible fabrics.

C. Coatings and Adhesives: Comply with UL 181, Class 1.

D. Metal-Edged Connectors: Factory fabricated with a fabric strip 3-1/2 inches (89 mm) wide attached to two strips of 2-3/4-inch- (70-mm-) wide, 0.028-inch- (0.7-mm-) thick, galvanized sheet steel or 0.032-inch- (0.8-mm-) thick aluminum sheets. Provide metal compatible with connected ducts.

E. Indoor System, Flexible Connector Fabric: Glass fabric double coated with neoprene.

1. Minimum Weight: 26 oz./sq. yd. (880 g/sq. m).

2. Tensile Strength: 480 lbf/inch (84 N/mm) in the warp and 360 lbf/inch (63 N/mm) in the filling.

3. Service Temperature: Minus 40 to plus 200 deg F (Minus 40 to plus 93 deg C).

F. Outdoor System, Flexible Connector Fabric: Glass fabric double coated with weatherproof, synthetic rubber resistant to UV rays and ozone.

1. Minimum Weight: 24 oz./sq. yd. (810 g/sq. m).

2. Tensile Strength: 530 lbf/inch (93 N/mm) in the warp and 440 lbf/inch (77 N/mm) in the filling.

3. Service Temperature: Minus 50 to plus 250 deg F (Minus 45 to plus 121 deg C).

2.12 FLEXIBLE DUCTS

A. Manufacturers: Subject to compliance with requirements, provide products by one of the following:

1. Flexmaster U.S.A., Inc.

2. McGill AirFlow LLC.

3. Ward Industries, Inc.; a division of Hart & Cooley, Inc.

B. Insulated, Flexible Duct: UL 181, Class 1, aluminum laminate and polyester film with latex adhesive supported by helically wound, spring-steel wire; fibrous-glass insulation; polyethylene vapor-barrier film.

1. Pressure Rating: 10-inch wg (2500 Pa) positive and 1.0-inch wg (250 Pa) negative.

2. Maximum Air Velocity: 4000 fpm (20 m/s).

3. Temperature Range: Minus 20 to plus 210 deg F (Minus 29 to plus 99 deg C).

4. Insulation R-value: Comply with ASHRAE/IESNA 90.1.

C. Flexible Duct Connectors:

1. Clamps: Stainless-steel band with cadmium-plated hex screw to tighten band with a worm-gear action in sizes 3 through 18 inches (75 through 460 mm), to suit duct size.

2. Non-Clamp Connectors: Liquid adhesive plus tape.

2.13 DUCT ACCESSORY HARDWARE

A. Instrument Test Holes: Cast iron or cast aluminum to suit duct material, including screw cap and gasket. Size to allow insertion of pitot tube and other testing instruments and of length to suit duct-insulation thickness.

B. Adhesives: High strength, quick setting, neoprene based, waterproof, and resistant to gasoline and grease.

PART 3 - EXECUTION

3.1 INSTALLATION

A. Install duct accessories according to applicable details in SMACNA's "HVAC Duct Construction Standards - Metal and Flexible" for metal ducts and in NAIMA AH116, "Fibrous Glass Duct Construction Standards," for fibrous-glass ducts.

B. Install duct accessories of materials suited to duct materials; use galvanized-steel accessories in galvanized-steel and fibrous-glass ducts, stainless-steel accessories in stainless-steel ducts, and aluminum accessories in aluminum ducts.

C. Install volume dampers at points on supply, return, and exhaust systems where branches extend from larger ducts. Where dampers are installed in ducts having duct liner, install dampers with hat channels of same depth as liner, and terminate liner with nosing at hat channel.

1. Install steel volume dampers in steel ducts.

2. Install aluminum volume dampers in aluminum ducts.

D. Set dampers to fully open position before testing, adjusting, and balancing.

E. Install test holes at fan inlets and outlets and elsewhere as indicated.

F. Install fire and smoke dampers according to UL listing.

G. Install duct access doors on sides of ducts to allow for inspecting, adjusting, and maintaining accessories and equipment at the following locations:

1. Upstream from filters.

2. At outdoor-air intakes and mixed-air plenums.

3. At drain pans and seals.

4. Downstream from control dampers, backdraft dampers, and equipment.

5. Adjacent to and close enough to fire or smoke dampers, to reset or reinstall fusible links. Access doors for access to fire or smoke dampers having fusible links shall be pressure relief access doors and shall be outward operation for access doors installed upstream from dampers and inward operation for access doors installed downstream from dampers.

6. Upstream and downstream from turning vanes.

7. Control devices requiring inspection.

8. Elsewhere as indicated.

H. Install access doors with swing against duct static pressure.

I. Access Door Sizes:

1. One-Hand or Inspection Access: 8 by 5 inches (200 by 125 mm).

2. Two-Hand Access: 12 by 6 inches (300 by 150 mm).

3. Head and Hand Access: 18 by 10 inches (460 by 250 mm).

4. Head and Shoulders Access: 21 by 14 inches (530 by 355 mm).

J. Label access doors according to Section 230553 "Identification for HVAC Piping and Equipment" to indicate the purpose of access door.

K. Install flexible connectors to connect ducts to equipment.

L. Connect diffusers to ducts with maximum 60-inch (1500-mm) lengths of flexible duct clamped or strapped in place.

M. Connect flexible ducts to metal ducts with liquid adhesive plus tape.

N. Install duct test holes where required for testing and balancing purposes.

3.2 FIELD QUALITY CONTROL

A. Tests and Inspections:

1. Operate dampers to verify full range of movement.

2. Inspect locations of access doors and verify that purpose of access door can be performed.

3. Operate fire and smoke dampers to verify full range of movement and verify that proper heat-response device is installed.

4. Inspect turning vanes for proper and secure installation.

END OF SECTION

SECTION 23 34 13

AXIAL HVAC FANS

PART 1 - GENERAL

1.1 SUMMARY

A. Section Includes:

1. Propeller axial fans.

1.2 ACTION SUBMITTALS

A. Product Data: For each type of product.

1. Include rated capacities, furnished specialties, and accessories for each fan.

2. Certified fan performance curves with system operating conditions indicated.

3. Certified fan sound-power ratings.

4. Motor ratings and electrical characteristics, plus motor and electrical accessories.

5. Material thickness and finishes, including color charts.

6. Dampers, including housings, linkages, and operators.

7. Fan speed controllers.

B. Shop Drawings:

1. Include plans, elevations, sections, and attachment details.

2. Include details of equipment assemblies. Indicate dimensions, weights, loads, required clearances, method of field assembly, components, and location and size of each field connection.

3. Include diagrams for power, signal, and control wiring.

4. Vibration Isolation Base Details: Detail fabrication, including anchorages and attachments to structure and to supported equipment. Include auxiliary motor slides and rails, and base weights.

1.3 INFORMATIONAL SUBMITTALS

A. Coordination Drawings: Show fan room layout and relationships between components and

adjacent structural and mechanical elements. Show support locations, type of support, and
weight on each support. Indicate and certify field measurements.

B. Field quality-control reports.

1.4 CLOSEOUT SUBMITTALS

A. Operation and Maintenance Data: For axial fans to include in emergency, operation, and
maintenance manuals.

1.5 MAINTENANCE MATERIAL SUBMITTALS

A. Belts: One set(s) for each belt-driven unit.

PART 2 - PRODUCTS

2.1 PERFORMANCE REQUIREMENTS

A. AMCA Compliance: Comply with AMCA performance requirements and bear the AMCA-
Certified Ratings Seal.

2.2 PROPELLER AXIAL FANS

A. Basis-of-Design Product: Subject to compliance with requirements, provide Greenheck SBCE
or a comparable product.

B. Housings: Steel with flanged inlet and outlet connections.

C. Wheel Assemblies: Cast or extruded aluminum with airfoil-shaped blades mounted on cast-iron wheel plate keyed to shaft with solid-steel key.

D. Belt Drives:

1. Factory mounted, with adjustable alignment and belt tensioning.

2. Service Factor Based on Fan Motor Size: 1.2.

3. Fan Shaft: Turned, ground, and polished steel designed to operate at no more than 70 percent of first critical speed at top of fan's speed range.

4. Fan Pulleys: Cast iron with split, tapered bushing; dynamically balanced at factory.

5. Motor Pulleys: Adjustable pitch. Select pulley so pitch adjustment is at the middle of adjustment range at fan design conditions.

6. Belts: Oil resistant, nonsparking, and nonstatic; matched sets for multiple belt drives.

7. Belt Guards: Fabricate of steel for motors mounted on outside of fan cabinet.

8. Motor Mount: Adjustable base.

9. Shaft Bearings: Ball bearing pillow blocks.

E. Accessories:

1. Companion Flanges: Rolled flanges of same material as housing.

2. Horizontal Support: Pair of supports bolted to fan housing, of same material as housing.

3. Shaft Seal: Elastomeric seal and Teflon wear plate, suitable for up to 300 deg F (149 deg C).

4. Motor Cover: Cover with side vents to dissipate motor heat, of same material as housing.

F. Factory Finishes:

1. Sheet Metal Parts: Prime coat before final assembly.

2. Exterior Surfaces: Baked-enamel finish coat after assembly.

2.3 SOURCE QUALITY CONTROL

A. Sound-Power Level Ratings: Comply with AMCA 301, "Methods for Calculating Fan Sound
Ratings from Laboratory Test Data." Factory test fans according to AMCA 300, "Reverberant
Room Method for Sound Testing of Fans." Label fans with the AMCA-Certified Ratings Seal.

PART 3 - EXECUTION

3.1 INSTALLATION

A. Install axial fans level and plumb.

B. Disassemble and reassemble units, as required for moving to the final location, according to manufacturer's written instructions.

C. Lift and support units with manufacturer's designated lifting or supporting points.

D. Equipment Mounting: Install continuous-thread hanger rods and elastomeric hangers of size required to support weight of the fan.

1. Comply with requirements for seismic-restraint devices specified in Section 230548 "Vibration Controls for HVAC Piping and Equipment."

2. Comply with requirements for hangers and supports specified in Section 230529"Hangers and Supports for HVAC Piping and Equipment."

E. Install units with clearances for service and maintenance.

3.2 CONNECTIONS

A. Drawings indicate general arrangement of ducts and duct accessories. Make final duct connections with flexible connectors. Flexible connectors are specified in Section 233300 "Air Duct Accessories."

3.3 FIELD QUALITY CONTROL

A. Perform the following tests and inspections:

1. Verify that shipping, blocking, and bracing are removed.
2. Verify that unit is secure on mountings and supporting devices and that connections to ducts and electrical components are complete. Verify that proper thermal-overload protection is installed in motors, starters, and disconnect switches.
3. Verify that cleaning and adjusting are complete.
4. Disconnect fan drive from motor, verify proper motor rotation direction, and verify fan wheel free rotation and smooth bearing operation. Reconnect fan drive system, align and adjust belts, and install belt guards.
5. Adjust belt tension.
6. Adjust damper linkages for proper damper operation.
7. Verify lubrication for bearings and other moving parts.
8. Verify that manual and automatic volume control and fire and smoke dampers in connected ductwork systems are in fully open position.
9. Disable automatic temperature-control operators, energize motor and confirm proper motor rotation and unit operation, adjust fan to indicated rpm, and measure and record motor voltage and amperage.
10. Shut unit down and reconnect automatic temperature-control operators.
11. Remove and replace malfunctioning units and retest as specified above.

B. Test and adjust controls and safeties. Controls and equipment will be considered defective if they do not pass tests and inspections.

C. Prepare test and inspection reports.

END OF SECTION

SECTION 23 37 13

DIFFUSERS, REGISTERS, AND GRILLES

PART 1 - GENERAL

1.1 SUMMARY

A. Section Includes:

1. Rectangular and square ceiling diffusers.
2. Louver face diffusers.
3. Fixed face registers and grilles.

B. Related Sections:

1. Section 233300 "Air Duct Accessories" for fire and smoke dampers and volume-control dampers not integral to diffusers, registers, and grilles.

1.2 ACTION SUBMITTALS

A. Product Data: For each type of product indicated, include the following:

1. Data Sheet: Indicate materials of construction, finish, and mounting details; and performance data including throw and drop, static-pressure drop, and noise ratings.
2. Diffuser, Register, and Grille Schedule: Indicate drawing designation, room location, quantity, model number, size, and accessories furnished.

PART 2 - PRODUCTS

2.1 CEILING DIFFUSERS

A. Rectangular and Square Ceiling Diffusers:

1. Basis-of-Design Product: Subject to compliance with requirements, provide Titus Industries products or comparable product.
2. Material: Steel.
3. Finish: Baked enamel, white.
4. Face Size: 24 by 24 inches (600 by 600 mm).
5. Face Style: Three cone.
6. Mounting: T-bar / Surface.
7. Pattern: Fixed.

8. Dampers: Radial opposed blade.

B. Louver Face Diffuser:

1. Basis-of-Design Product: Subject to compliance with requirements, provide Titus Industries products or comparable product.

2. Material: Steel.

3. Finish: Baked enamel, white.

4. Mounting: Surface / T-bar.

5. Pattern: Four-way core style.

6. Dampers: Radial opposed blade.

2.2 REGISTERS AND GRILLES

A. Fixed Face Register:

1. Basis-of-Design Product: Subject to compliance with requirements, provide Titus Industries or comparable product.

2. Material: Steel.

3. Finish: Baked enamel, white.

4. Face Arrangement: 1/2-by-1/2-by-1/2-inch (13-by-13-by-13-mm) grid core.

5. Core Construction: Integral.

6. Frame: 1-1/4 inches (32 mm) wide.

7. Mounting: Countersunk screw / Lay in.

8. Damper Type: Adjustable opposed blade.

B. Fixed Face Grille:

1. Basis-of-Design Product: Subject to compliance with requirements, provide Titus Industries or comparable product.

2. Material: Steel.

3. Finish: Baked enamel, white.

4. Face Arrangement: 1/2-by-1/2-by-1/2-inch (13-by-13-by-13-mm) grid core.

5. Core Construction: Integral.

6. Frame: 1-1/4 inches (32 mm) wide.

7. Mounting: Countersunk screw / Lay in.

2.3 SOURCE QUALITY CONTROL

A. Verification of Performance: Rate diffusers, registers, and grilles according to ASHRAE 70,
"Method of Testing for Rating the Performance of Air Outlets and Inlets."

PART 3 - EXECUTION

3.1 INSTALLATION

A. Install diffusers, registers, and grilles level and plumb.

B. Ceiling-Mounted Outlets and Inlets: Drawings indicate general arrangement of ducts, fittings, and accessories. Air outlet and inlet locations have been indicated to achieve design requirements for air volume, noise criteria, airflow pattern, throw, and pressure drop. Make final locations where indicated, as much as practical. For units installed in lay-in ceiling panels, locate units in the center of panel.

C. Install diffusers, registers, and grilles with airtight connections to ducts and to allow service and
maintenance of dampers, air extractors, and fire dampers.

3.2 ADJUSTING

A. After installation, adjust diffusers, registers, and grilles to air patterns indicated, or as directed,
before starting air balancing.

END OF SECTION

SECTION 23 55 33

GAS-FIRED UNIT HEATERS

PART 1 - GENERAL

1.1 SUMMARY

A. Section includes gas-fired unit heaters.

1.2 ACTION SUBMITTALS

A. Product Data: For each type of gas-fired unit heater.

1. Include rated capacities, operating characteristics, and accessories.

B. Shop Drawings: For gas-fired unit heaters. Include plans, elevations, sections, and attachment details.

1. Prepare by or under the supervision of a qualified professional engineer detailing fabrication and assembly of gas-fired unit heaters, as well as procedures and diagrams.
2. Design Calculations: Calculate requirements for selecting vibration isolators and for designing vibration isolation bases.
3. Include details of equipment assemblies. Indicate dimensions, weights, loads, required clearances, method of field assembly, components, and location and size of each field connection.
4. Include diagrams for power, signal, and control wiring.

1.3 INFORMATIONAL SUBMITTALS

A. Coordination Drawings: Plans, elevations, and other details, drawn to scale, on which the following items are shown and coordinated with each other, using input from installers of the items involved:

1. Structural members to which equipment will be attached.
2. Items penetrating roof and the following:

a. Vent and gas piping rough-ins and connections.

B. Field quality-control reports.

C. Sample warranty.

1.4 CLOSEOUT SUBMITTALS

A. Operation and maintenance data.

1.5 QUALITY ASSURANCE

A. ASHRAE/IES 90.1 Compliance: Applicable requirements in ASHRAE/IES 90.1, Section 6 - "Heating, Ventilating, and Air-Conditioning."

1.6 WARRANTY

A. Special Warranty: Manufacturer agrees to repair or replace heat exchanger of gas-fired unit heater that fails in materials or workmanship within specified warranty period.

1. Warranty Period: Five years from date of Substantial Completion.

PART 2 - PRODUCTS

2.1 MANUFACTURERS

A. Manufacturers: Subject to compliance with requirements, provide products by one of the following:

1. Modine Manufacturing Company.
2. REZNOR, a brand of Nortek Global HVAC.
3. Sterling HVAC Products; a Mestek company.
4. Trane.

2.2 PERFORMANCE REQUIREMENTS

A. Electrical Components, Devices, and Accessories: Listed and labeled as defined in NFPA 70, by a qualified testing agency, and marked for intended location and application.

2.3 MANUFACTURED UNITS

A. Description: Factory assembled, piped, and wired, and complying with ANSI Z83.8/CSA 2.6.

B. Gas Type: Design burner for natural gas having characteristics same as those of gas available at Project site.

C. Type of Venting: Indoor, separated combustion, power vented.

D. Housing: Steel, with integral draft hood and inserts for suspension mounting rods.

1. External Casings and Cabinets: Baked enamel over corrosion-resistant-treated surface.
2. Discharge Louvers: Independently adjustable, horizontal blades.
3. Discharge Nozzle: Discharge at 25 to 65 degrees from horizontal.

E. Accessories:

1. Four-point suspension kit.
2. Concentric, Terminal Vent Assembly: Combined combustion-air inlet and power-vent outlet with wall or roof caps. Include adapter assembly for connection to inlet and outlet pipes and flashing for wall or roof penetration.

F. Heat Exchanger: Aluminized or Stainless steel.

G. Burner Material: Aluminized steel with stainless-steel inserts or Stainless steel.

H. Propeller Unit Fan:

1. Formed-steel or Aluminum propeller blades riveted to heavy-gage steel spider bolted to cast-iron hub, dynamically balanced, and resiliently mounted.
2. Fan-Blade Guard: Galvanized steel, complying with OSHA specifications, removable for maintenance.

I. Motors:

1. Comply with NEMA designation, temperature rating, service factor, and efficiency requirements for motors specified in Section 230513 "Common Motor Requirements for HVAC Equipment."
2. Enclosure Materials: Rolled steel.
3. Unusual Service Conditions:

    a. Ambient Temperature: 90 F
    b. Altitude: 5300 ft above sea level.

4. Efficiency: Premium efficient.

J. Controls: Regulated redundant gas valve containing pilot solenoid valve, electric gas valve, pilot filter, pressure regulator, pilot shutoff, and manual shutoff all in one body.

1. Gas Control Valve: Modulating.
2. Ignition: Electronically controlled electric spark with flame sensor.
3. Fan Thermal Switch: Operates fan on heat-exchanger temperature.
4. Vent Flow Verification: Flame rollout switch.
5. Control transformer.
6. High Limit: Thermal switch or fuse to stop burner.
7. Thermostat

8. Unit-Mounted Thermostat:

    a. Single stage.
    b. Fan on-off-automatic switch.
    c. 24-V ac.
    d. 50 to 90 deg F operating range.

K. Electrical Connection: Factory wire motors and controls for a single electrical connection.

PART 3 - EXECUTION

3.1 INSTALLATION

A. Install and connect gas-fired unit heaters and associated gas and vent features and systems according to NFPA 54, applicable local codes and regulations, and manufacturer's written instructions.

3.2 EQUIPMENT MOUNTING

A. Suspended Units: Suspend from substrate using threaded rods, spring hangers, and building attachments. Secure rods to unit hanger attachments. Adjust hangers so unit is level and plumb.

B. Substrate-Mounted Units: Provide supports connected to substrate. Secure units to supports.

1. Spring hangers are specified in Section 230529 "Hangers and Supports for HVAC Piping and Equipment."
2. Threaded Rods, Spring Hangers, and Building Attachments: Comply with requirements in Section 230529 "Hangers and Supports for HVAC Piping and Equipment".
3. Anchor the unit to resist code-required horizontal acceleration.

3.3 CONNECTIONS

A. Piping installation requirements are specified in other Sections. Drawings indicate general arrangement of piping, fittings, and specialties.

B. Where installing piping adjacent to gas-fired unit heater, allow space for service and maintenance.

C. Gas Piping: Comply with Section 231123 "Facility Natural-Gas Piping." Connect gas piping to gas train inlet; provide union with enough clearance for burner removal and service.

D. Ground equipment according to Section 260526 "Grounding and Bonding for Electrical Systems."

E. Connect wiring according to Section 260519 "Low-Voltage Electrical Power Conductors and Cables."

3.4 FIELD QUALITY CONTROL

A. Manufacturer's Field Service: Engage a factory-authorized service representative to test and inspect components, assemblies, and equipment installations, including connections.

B. Perform the following tests and inspections:

1. Test and adjust controls and safeties. Replace damaged and malfunctioning controls and equipment.
2. Verify bearing lubrication.
3. Verify proper motor rotation.
4. Test Reports: Prepare a written report to record the following:

    a. Test procedures used.
    b. Test results that comply with requirements.
    c. Test results that do not comply with requirements and corrective action taken to achieve compliance with requirements.

C. Gas-fired unit heater will be considered defective if it does not pass tests and inspections.

D. Prepare test and inspection reports.

3.5 ADJUSTING

A. Adjust initial temperature and humidity set points.

B. Adjust burner and other unit components for optimum heating performance and efficiency.

3.6 DEMONSTRATION

A. Train Owner's maintenance personnel to adjust, operate, and maintain gas-fired unit heaters.

END OF SECTION

SECTION 23 81 26

VRF AND HEAT PUMP SYSTEMS

PART 1 - GENERAL

1.1 SUMMARY

A. Section includes direct expansion, air cooled, heat pump and heat recovery variable refrigerant
flow systems.

1.2 ACTION SUBMITTALS

A. Product Data: For each type of product indicated.

B. Shop Drawings: Include plans, elevations, sections, details, and attachments to other work.

1. Detail equipment assemblies and indicate dimensions, weights, loads, required
clearances, method of field assembly, components, and location and size of each field
connection.

1.3 INFORMATIONAL SUBMITTALS

A. Warranty: Sample of special warranty.

1.4 CLOSEOUT SUBMITTALS

A. Operation and maintenance data.

1.5 QUALITY ASSURANCE

A. Electrical Components, Devices, and Accessories: Listed and labeled as defined in NFPA 70, by a qualified testing agency, and marked for intended location and application.

B. ASHRAE Compliance:

1. Fabricate and label refrigeration system to comply with ASHRAE 15, "Safety Standard
for Refrigeration Systems."

2. ASHRAE Compliance: Applicable requirements in ASHRAE 62.1, Section 4 -"Outdoor Air Quality," Section 5 - "Systems and Equipment," Section 6 - " Procedures," and Section 7 - "Construction and System Start-up."

C. ASHRAE/IESNA Compliance: Applicable requirements in ASHRAE/IESNA 90.1. System components shall be manufactured in facilities that maintain ISO 9001 Quality Management System and ISO 14001 Environmental Management System certifications.

D. System components shall comply with underwriters Laboratories (UL) 1995 Heating and Cooling Equipment Standard for Safety and bear the Intertek Electrical Testing Laboratories (ETL) mark.

E. Variable refrigerant flow heat pump and heat recovery systems shall have published performance ratings certified by AHRI (Air-Conditioning, Heating, and Refrigeration Institute) and listed in the AHRI Standard 1230 certified product directory www.AHRInet.org.

1.6 WARRANTY

A. Special Warranty: Manufacturer's standard form in which manufacturer agrees to repair or replace components of split-system air-conditioning units that fail in materials or workmanship within specified warranty period.

1. Warranty Period:

a. For Compressor: Six year(s) from date of Substantial Completion.

b. For Parts: One year(s) from date of Substantial Completion.

c. For Labor: One year(s) from date of Substantial Completion.

PART 2 - PRODUCTS

2.1 DUCTLESS INDOOR UNITS

A. Basis-of-Design Product: Subject to compliance with requirements, provide LG Multi V or comparable product.

B. Ceiling Cassette – 4 Way

1. General:

2. Unit shall be factory assembled, wired, piped and run tested.

3. Unit shall be designed to be installed for indoor application.

4. Unit shall be designed to mount recessed in the ceiling and has a surface mounted grille on the bottom of the unit.

5. The unit shall be available in both 2’ x 2’ and 3’ x 3’ chassis.

6. Unit shall be capable to be installed with heat pump or heat recovery or cooling VRF system.

C. Casing/Panel

1. Unit case shall be manufactured using galvanized steel plate.

2. The unit shall be provided with an off-white Acrylonitrile Butadiene Styrene (ABS) polymeric resin architectural grille.

3. The grille shall have a tapered trim edge, and a hinged, spring clip (screw-less) return air filter-grille door.

4. Unit shall be provided with metal ears designed to support the unit weight on four corners.

5. Ears shall have pre-punched holes designed to accept field supplied all thread rod hangers.

D. Cabinet Assembly:

1. Unit shall have four supply air outlets and one return air inlet.

2. The supply air outlet shall be through four-directional slot diffuser each equipped with independent oscillating motorized guide vane designed to change the airflow direction.

3. The grille shall have a discharge range of motion of 40° in an up/down direction with capabilities of locking the vanes.

4. The unit shall have a guide vane algorithm designed to sequentially change the predominant discharge airflow direction in counterclockwise pattern.

5. Guide vanes shall provide airflow in all directions.

6. Unit shall be equipped with factory installed temperature thermistors for:

   a. Return air

   b. Refrigerant entering coil

   c. Refrigerant leaving coil

7. Unit shall have a factory assembled, piped and wired electronic expansion valve (EEV)
for refrigerant control.

8. Unit shall have a built-in control panel to communicate with other indoor units and to the
outdoor unit.

9. The unit shall have factory designated branch duct knockouts on the unit case.

10. The unit shall have provision of fresh air ventilation through a knock-out on the cabinet.

11. The branch duct knockouts shall have the ability to duct up to ½ the unit airflow capacity.

12. The branch duct cannot be ducted to another room.

13. Unit shall have the following functions as standard:

    a. Self-diagnostic function

    b. Auto addressing

    c. Auto restart function

    d. Auto changeover function (Heat Recovery system only)

    e. Auto operation function

    f. Child lock function

    g. Forced operation

    h. Dual thermistor control

    i. Sleep mode

    j. Dual setpoint control

    k. Multiple aux heater applications

    l. Filter life and power consumption display

E. Fan Assembly:

1. The unit shall have a single, direct drive, turbo fan made of high strength ABS HT-700 polymeric resin.

2. The fan impeller shall be statically and dynamically balanced.

3. The fan motor is Brushless Digitally controlled (BLDC) with permanently lubricated and sealed ball bearings.

4. The fan motor shall include thermal, overcurrent and low RPM protection.

5. The fan/motor assembly shall be mounted on vibration attenuating rubber grommets.

6. The fan speed shall be controlled using microprocessor based direct digitally controlled algorithm.

7. In cooling mode, the indoor fan shall have the following settings: Low, Med, High, Power Cool, and Auto.

8. In heating mode, the indoor fan shall have the following settings: Low, Med, High, and Auto.

9. Unit shall have factory installed motorized louver to provide flow of air in up and down direction for uniform airflow.

F. Filter Assembly:

1. The return air inlet shall have a factory supplied removable, washable filter with antifungal treatment.

2. The unit shall have the option for a secondary plasma filter accessory.

3. The filter access shall be from the bottom of the unit.

4. The unit shall have provision for an optional auto-elevating grille kit designed to provide motorized ascent/descent of the return air grille/pre filter assembly.

    a. The ascent/descent of the return air grille shall be up to a distance of 14-3/4 feet allowing access to remove and clean the filter.

    b. The auto-elevating grille shall have a control algorithm to accept up, down and stop control commands from the controller.

    c. The auto-elevating grille shall have a control to stop the descent automatically if a contact is made with any obstacle.

G. Coil Assembly:

1. Unit shall have a factory-built coil comprised of aluminum fins mechanically bonded on copper tubing.

2. The copper tubing shall have inner grooves for high efficiency heat exchanger.

3. Unit shall have a minimum 1 or 2 row coil, 18-19 fins per inch.

4. Unit shall have a factory supplied condensate drain pan below the coil constructed of EPS (expandable polystyrene resin).

5. Unit shall include an installed and wired condensate drain pump capable of providing minimum 27.5 inch lift from bottom surface of the unit.

6. The drain pump shall have a safety switch to shut off the unit if condensate rises too high in the drain pan.

7. Unit shall have provision of 45° flare refrigerant pipe connections.

8. The coil shall be factory pressure tested at a minimum of 551 psig. All refrigerant piping from outdoor unit to indoor unit shall be field insulated.

H. Microprocessor Control:

1. The unit shall have a factory installed microprocessor controller capable of performing functions necessary to operate the system.

2. The unit shall be able to communicate with other indoor units and the outdoor unit using a field supplied minimum of 18 AWG, 2 core, stranded and shielded communication

cable.

3. The unit controls shall operate the indoor unit using one of the five operating modes:

    a. Auto changeover (Heat Recovery System only)

    b. Heating

    c. Cooling

    d. Dry

    e. Fan only

I. Electrical:

1. The unit electrical power shall be 208-230/1/60 (V/Ph/Hz)

2. The unit shall be capable of operating within voltage limits of +/- 10% of the rated voltage.

J. Controls:

1. Unit shall use controls provided by the manufacturer to perform all functions necessary to operate the system effectively and efficiently and communicate with the outdoor unit over an RS485 daisy chain.

2.2 DUCTED INDOOR UNITS

A. Basis-of-Design Product: Subject to compliance with requirements, provide Ventus or comparable product.

B. Cabinet

1. All units casing shall be constructed by a non-skeleton structure made by a “C” shape sandwich of R-12.5 polyurethane foam with double side zinc coated, 25 gauge, galvanized steel. Provide organic polyester coating to exterior surface for corrosion resistance.

C. Fan

1. Provide Direct Driven Variable Speed Plenum Fan, with air foil backward-curved impellers with 7 blades made of a polymer composite material which is installed directly on the motor shaft. Beltless configuration and motor/fan pair shall be placed on a common frame isolated from the unit structure by rubber vibration isolators.

D. Direct Expansion Coils

1. All coils shall be tested at 304 PSI; the maximum main coil working pressure is 246 PSI. Maximum refrigerant temperature is 82° F. Tubes and U-bends are ½” inch O.D. copper. Fins shall be aluminum and be mechanically bonded to the copper tubes, in a 10 Fins per

Inch configuration.

E. Filters

1. Provide 2 inch throwaway MERV 8 filters.

F. Unit Controls

1. Provide Carel controller and room thermostat.

2.3 OUTDOOR UNITS – HEAT RECOVERY

A. Basis-of-Design Product: Subject to compliance with requirements, provide LG Multi V or comparable product.

B. Variable Refrigerant Flow (VRF) HVAC system shall be a variable capacity, direct expansion (DX) heat recovery engineered system. The outdoor unit shall consist of one cabinet connected through common refrigerant piping. Each system shall have single or multiple, inverter compressor(s). Each system shall be connected to multiple indoor units (IUs - ducted, non-ducted or combination thereof) through a common refrigerant piping and integrated system controls. Each indoor unit shall be controlled individually. Additionally, heat recovery system shall be capable of simultaneous heating and cooling individual zone(s).

C. VRF heat recovery system shall be an air cooled, system consisting of one to three outdoor unit(s) connected to Heat Recovery (HRU) unit(s) and indoor unit(s). Multi-port heat recovery units shall allow simultaneous heating and cooling of individual zone(s). Communication between components shall be provided as an integrated feature of the VRF system.

1. Outdoor Unit shall be capable of maintaining continuous compressor operation under all of the following operating ambient air conditions.

a. Heat Recovery System

1) All IDUs Cooling: 14°F DB to 122°F DB

2) All IDUs Heating: -13°F WB to 61°F WB

3) Cooling based synchronous: 14°F DB to 81°F DB

4) Heating-based synchronous: 14°F WB to 61°F WB

b. The VRF system shall maintain normal heating and/or cooling operation at all IDUs while any one IDU is powered down for service. When power is restored to the IDU serviced, normal operation shall be restored with no system shutdown, interruption, reset, or power cycling of the outdoor unit.

2. General

a. The air-conditioning system shall use R410A refrigerant.

b. Each system shall have one air source outdoor units.

c. Refrigerant circuit configuration for Heat Recovery System

1) The refrigerant circuit shall be constructed using field provided copper piped together with manufacturer supplied Heat Recovery unit(s) connected to multiple (ducted, non-ducted or combination thereof) indoor units to effectively and efficiently control the simultaneous heating and cooling operation of the VRF system.

2) Each refrigerant pipe, elbows and valves shall be individually insulated with no air gaps. All joints shall be glued and sealed.

3) The VRF manufacturer shall provide published documentation that specifically allows the installation of field provided full-port high quality refrigerant system isolation valves rated for use with R410A on any and all pipes of the VRF system. Isolation valves shall be strategically placed in the refrigerant piping system to allow the VRF system service provider to isolate a portion of the piping system to avoid a pump down of the entire refrigerant piping system when replacing/repairing the refrigeration circuit piping, HR unit(s), or indoor unit(s).

4) Factory installed microprocessor controls in the outdoor unit(s), HR unit(s), and indoor unit(s) shall perform functions to efficiently operate the VRF system and communicate in a daisy chain configuration between outdoor unit and HR unit(s) and indoor unit(s) over a RS485 18AWG stranded and twisted wire data link.

d. The system shall be designed to accept connection up to 64 indoor units.

e. The total nominal capacity of all indoor units shall be no less than 50% and no more than 130% of outdoor unit's nominal capacity to ensure the VRF system will have sufficient capacity to meet the building's cooling and heating load at design day weather conditions.

f. The maximum allowable system combination ratio shall be 130%. Systems designed with a combination ratio above 130% will not be accepted.

g. Each outdoor unit refrigerant circuit shall have a high-pressure safety threaded rupture disk or threaded fusible plug fitting.

h. The outdoor unit assembly, indoor unit assembly and/or heat recovery unit assembly shall be shipped from the factory assembled and pressure tested including internal refrigerant piping, compressor, contacts, relay(s), control components, power and communications wiring necessary.

i. Each outdoor unit refrigeration circuit shall have the following components:

1) Inverter variable speed compressor(s)

2) Outdoor unit heat exchanger

3) Refrigerant strainer(s)

4) Check valve(s)

5) Oil separator

6) Accumulator

7) Heat exchanger circuiting control

8) Electronic expansion valve(s)

9) 4-way reversing valve

10) Sub-cooler circuit with controls

11) High and low side Schrader valve service ports with caps.

12) Service valves

3. System

A. Each outdoor unit frame shall have a stand-alone microprocessor control that varies the use of the outdoor coil circuits to optimize the use of heat transfer surface. Control shall be able to dynamically change the path and coil circuiting based on one of the following operating parameters: head pressure, suction pressure, system sub-cooling requirements, available refrigerant charge, system mode of operation, coil heat transfer efficiency shall have a variable flow path heat exchanger function to vary the refrigerant flow path based on system operating mode and operating conditions.

B. System inverter compressors shall have a mid-stage, medium pressure vapor economizer apparatus to maximize refrigerant compression efficiency.

C. System accumulator shall be provided with controls that continuously monitors, modifies, and controls the amount of refrigerant in circulation (active refrigerant charge) while the system is operating. The active refrigerant charge microprocessor shall monitor system high and low side gas pressure, coil approach temperature, liquid line temperature and pressure, and system sub-cooling requirement to control the refrigerant charge.

D. System shall comprise of the following frame configurations.

1) 6 through 14 ton systems shall be a single frame only.

4. Refrigerant Pipe System Design Parameters

A. The outdoor unit shall be capable of operating at an elevation difference of up to 360feet above or below the lowest or highest indoor unit respectively.

B. The outdoor unit shall be capable of operating with up to 3280 equivalent length feet of interconnecting liquid line refrigerant pipe in the network.

C. The outdoor unit shall be capable of operating with up to 656 actual feet or 738 equivalent length feet of liquid line refrigerant pipe spanning between outdoor unit and farthest indoor unit.

5. Defrost Operations

A. The outdoor unit(s) shall be capable of Intelligent defrost operation to melt accumulated frost, snow and ice that may have accumulated on the outdoor unit heat exchanger. The defrost cycle length and sequence shall be based on outdoor ambient temperatures, outdoor unit heat exchanger temperature, and various differential pressure variables.

B. Defrost Mode Selection: The outdoor unit shall be provided with three field-selectable defrost operation modes; Normal, Fast, or Forced.

1) Normal Defrost operation intended for use in areas of the country with mild winter temperatures and light to moderate humidity levels. The strategy minimizes defrost cycle frequency allowing frozen precipitation to build longer in between cycles. Minimum time between defrost cycles shall be 20 minutes. Intelligent Defrost shall choose between split coil/frame and full system methods to minimize energy consumption and cycle time.

2) Fast Defrost operation intended for use in areas of the country that experience adverse winter weather with periods of heavy winter precipitation and extremely low temperatures. This strategy shall maximize the systems heating performance and maintain operational efficiency. When the ambient temperature is above 32°F, Intelligent Defrost shall continue to heat until the discharge temperature declines. At temperatures below 32°F, the time between defrost cycles shall be a minimum of 90 minutes. At temperatures below 4°F, a defrost cycle shall occur every two hours to optimize system heating efficiency.

3) Forced Defrost operation shall be available for the service provider to test defrost operations at any weather condition and to manually clear frozen water from the outdoor coil surfaces.

C. Defrost Method Selection: The outdoor unit shall be provided with two field- selectable defrost operation methods; Split Coil/Frame and Full System.

1) Split Coil/Frame method shall be available when Normal Defrost mode is
selected. Split Coil method shall be available on all Heat Pump and Heat
Recovery single-frame VRF systems. Split Frame defrost shall be available
on all Heat Pump and Heat Recovery multi-frame outdoor units.

2) Split Coil method shall remove ice from the bottom half of the outdoor unit coil first for six minutes, then the bottom half for six minutes. Next the bottom coil shall be heated again for an additional three minutes to remove any frozen water that may have dripped onto the lower coil during the top coil defrost operation.

3) When Split Coil/Frame method is selected, a Full System defrost shall occur every third defrost cycle to assure 100% of the frozen precipitation has been removed to maintain optimum efficient performance.

4) Full System method shall be available as a field selectable option. Outdoor units located in areas of the country where large volumes of frozen precipitation are common, the commissioning agent shall select the Full System defrost method.

D. Indoor Unit Fan Operation During Defrost

1) During partial defrost operation indoor units operating in cooling or dry mode shall continue normal operation.

2) During partial defrost operation, indoor units that are commissioned with fans set for continuous operation shall maintain normal fan speed unless the leaving air temperature drops, then the fan speed will be reduced to low speed for the remainder of the defrost cycle.

3) During full system defrost operation, indoor unit fans will cycle off and remain off during the remainder of the defrost cycle.

6. Oil Management

A. Each outdoor unit shall have an independently operating system to maximize compressor efficiency and ensure a consistent film of oil on all moving compressor parts at all speeds.

B. The oil return system shall include a dedicated centrifugal oil separator for each compressor designed to extract oil from the oil/refrigerant gas stream leaving the compressor.

C. Oil collected by each compressor independent oil return system shall be returned directly to the compressor oil sump passively without the use of mechanical pumps or other apparatus

D. Oil return systems that depend on differential pressure to return oil to the

compressor sump, for example bleeding off or bypassing any amount of high-pressure gas to push oil back to the compressor sump or the suction inlet of the compressor chamber, shall not be accepted.

E. Compressor oil shall be maintained at the same temperature as the discharge gas leaving the compressor to prevent any blending of refrigerant and oil to maintain stable oil viscosity during compressor operation.

F. The oil return system shall not inject, blend, or otherwise mix collected oil with suction vapor refrigerant before entering the compressor scroll or other gas compression apparatus.

G. The oil return system shall provide an oil level monitor for each compressor that provides continuous feedback to the outdoor unit microprocessor.

H. The microprocessor shall initiate an oil return cycle when the oil level monitoring sensor indicates a low oil level in the compressor sump.

I. Timed and/or scheduled unmonitored oil return operations and/or any oil return system that does not initiate an oil return cycle based on compressor sump low level reading shall not be permitted.

7. Cabinet

A. Outdoor unit cabinet shall be made of 20-gauge galvanized steel with an enamel finish.

B. Outdoor unit cabinet shall have a heavy gauge coated wire coil guard.

C. Outdoor unit cabinet finish shall have been tested in accordance with ASTM B-117 salt spray test procedure for a minimum of 1000 hours.

D. All internal serviceable components shall be accessible by removing the front panel of the unit. Outdoor units that require the removal of side and/or rear service panels shall not be permitted.

E. A controls maintenance and unit diagnostic access port shall be provided in front of the microprocessor to allow quick access to read service codes, set DIP switches, perform microprocessor operational checks, address system components and extract operational data without removing the unit's front panel(s).

F. The controls access port shall be no larger than 6-1/4" x 6-3/4" to the possibility of weather-related moisture entering the control panel while service is in progress.

G. A baked galvanized steel access port cover with a baked enamel finish (color matching unit cabinet) shall be provided and easily removed.

H. Controls access port cover shall be secured to the unit with a factory provided braided steel wire lanyard to prevent loss/damage to the port cover.

I. The cabinet shall be designed with pre-punched pipe and electrical knockouts. Cabinet shall be designed to accept connection of refrigerant pipe, power cable, and communications wiring either:

1) Through the front panel

2) Through the right side

3) Through the unit's base pan (bottom)

8. Fan Assembly(s)

A. Each 6-ton cabinet shall be equipped with one direct drive variable speed propeller fans with independent Brushless Digitally Controlled (BLDC) motors mounted in a vertical top air discharge configuration.

B. The fan blades shall be made of non-metallic light-weight Acrylonitrile Butadiene Styrene (ABS) material.

C. Fan blade design shall be a quiet, deep-V designed to minimize air turbulence as air passes over and leaves the trailing edge of the fan blade. Fan shroud shall be designed in conjunction with fan blade to minimize air turbulence along the edge of the blades to minimize noise generation.

D. Outdoor unit fan motors shall be powered using a dc inverter drive capable of operating the fans at a maximum speed of 1100 RPM.

E. Each fan motor case/frame shall be made with a lightweight non-ferrous metal alloy. Bearing shall be sealed and permanently lubricated.

F. Only one fan blade per fan motor shall be accepted. Dual fan assemblies driven by a double-end shaft motor shall not be permitted.

G. Each fan blade and motor assembly shall be balanced, tested, and mounted to the unit frame using a means of isolation that will eliminate any objectionable audible harmonic or vibration being transferred to the unit frame.

H. A raised ferrous wire metal guard with a baked enamel finish (color matching unit cabinet) shall be provided to prevent large object and animal contact with moving parts.

I. The outdoor fan inverter drive shall be provided with a DIP switch that reprograms the DC inverter drive to allow outdoor unit fan assemblies to operate under high discharge static conditions (up to 0.32 in-wg external static pressure) such as a ducted discharge application.

9. Outdoor Unit Coil

A. Shall be a variable path design.

B. Shall be provided and built by the VRF outdoor unit provider.

C. It shall be comprised of aluminum fins mechanically bonded on copper tubing.

D. The copper tubes shall be internally ribbed to maximize heat transfer. Smooth bore tubes are not acceptable.

E. The aluminum fin heat transfer surfaces shall be treated to maximize the life of the fin material. Coil fin heat transfer surfaces shall be treated with a factory applied corrosion resistant GoldFin™ coating. Coating of fins shall be a two-step process. Base coat shall be an anticorrosive paint specifically engineered for bonding to bare aluminum. The top coat shall be a Hydrophilic paint with a gloss finish to protect the anti-corrosion coat. Hydrophilic paint shall be specifically formulated to promote liquid precipitation runoff and assist in minimizing particulate debris from sticking to the fin's heat transfer surfaces.

F. Fin material coating shall be tested in accordance with ASTM B-117 salt spray test procedure for a minimum of 1000 hours.

G. The outdoor unit coil assembly shall be factory pressure tested to a pressure of 551 psig.

H. Coil fin series shall be up to 22 Fins per Inch (FPI).

I. All the outdoor units shall have a minimum of a 3 row heat exchanger.

10. Compressor(s)

A. Each 6 ton frames shall be equipped with one hermetically sealed, inverter driven, High Side Shell (HSS) scroll compressor.

B. Outdoor unit frames containing constant speed 50-60 Hz compressor(s) or containing a constant speed 50-60 Hz compressor in combination with an inverter compressor(s) are not acceptable.

C. Each inverter driven, HSS scroll compressor shall be capable of operating in a frequency range from 15 Hz to 150 Hz with control in 0.5 Hz increments.

D. Each compressor shall be equipped with a minimum of a 60 Watt crankcase heater.

E. The compressor shall be provided from the factory with a full charge of Polyvinyl Ether (PVE) oil. Ester based oils are not acceptable (POE) to prevent gum from forming in the system in the case of a motor burn.

F. All compressor bearing(s) shall have Teflon™ coating.

G. All compressors shall be protected with:

1. High Pressure switch

2. Over-current/under current protection

3. Phase failure

4. Phase reversal

11. Sound Levels

A. Outdoor unit noise levels shall not exceed 60 dB A. Test protocol includes a sound level measurement taken at an elevation of 5 ft. above the mounting surface at the center point of the width of the outdoor unit frame at a distance of 1 meter in front of the front panel surface with all fans running at absolute maximum motor design speed at all unit operating modes including high heating mode in an anechoic chamber using ISO3745 test standard protocol.

12. Sensors

A. Each single cabinet shall have

1. Suction temperature sensor

2. Discharge temperature sensor

3. High Pressure sensor

4. Low Pressure sensor

5. Outdoor temperature sensor

6. Outdoor unit heat exchanger temperature sensor

13. Heat Recovery Unit (HRU)

A. General

1. HR unit shall be designed and manufactured by the same manufacturer of VRF indoor unit(s) and outdoor unit(s).

2. HR units shall be available in a 2, 3, and 4-port design. Single port designs and pipe system designs that require a dedicated HR unit is not acceptable.

3. HR unit casing shall be made with galvanized steel and have a galvanized steel finish.

4. HR Unit shall be an intermediate refrigerant control device between the air source outdoor unit and the indoor units to control the systems simultaneous cooling and heating operation.

5. HR unit shall be engineered to work with a three pipe VRF system
comprised of the following:

a) High Pressure Vapor Pipe

b) Low Pressure Vapor Pipe

c) Liquid Pipe

6. HR unit shall be designed to be piped in a series pipe configuration relative to each other.

7. HR units shall be able to accept/service at least two indoor units per HR unit up to a combined connected IDU cooling capacity of 192 Mbh.

8. Each port shall be capable of operating in cooling or heating independently regardless of the operating mode of any other port on the HR unit or in the system.

9. HR unit shall be internally piped, wired, assembled, leak and run tested at the factory.

10. HR unit shall be designed for installation in a conditioned environment and provided with factory applied insulation on all cold surfaces.

11. HR unit shall have a liquid bypass circuit between the high-pressure vapor
and the low pressure vapor pipes.

12. Each port IDU port shall have a pair (2) two-position solenoid valves.

13. HR unit shall have a balancing valve to control the pressure between the high pressure and low-pressure pipe during mode switching.

14. HR unit shall contain a sub-cooler circuit with stand-alone controls for each HR unit.

15. HR cold surface pipes shall be factory insulated to prevent condensation.

16. HR unit shall not require a condensate drain.

17. All field provided refrigerant piping and VRF system refrigerant piping components between outdoor unit and HR unit and from HR unit to indoor
unit shall be field insulated.

18. The HR unit shall not exceed a net unit weight of 49 lbs.

14. 3-phase VRF system piping capabilities

A. The elevation difference between indoor units on heat pump systems shall be 131
feet.

B. The elevation differences for heat recovery systems shall be:

1. Heat recovery unit (HRU) to connected indoor unit shall be 49 feet.

2. HRU to HRU shall be 49 feet.

3. Indoor unit to indoor unit connected to same HRU shall be 49 feet.

4. Indoor unit to indoor unit connected to separate parallel HRU's shall be 131 feet.

C. The acceptable elevation difference between two series connected HR units shall be 16 feet.

15. Controls

a. HR unit(s) shall have factory installed unit mounted control boards and integral microprocessor to communicate with indoor units and outdoor units over a single stranded, shielded, twisted wire pair.

b. Manufacturer shall provide screw terminal connections at the HR unit to terminate power wiring and communications cables.

2.4 OUTDOOR UNITS – HEAT PUMP

A. Basis-of-Design Product: Subject to compliance with requirements, provide LG Multi V or comparable product.

B. Variable Refrigerant Flow (VRF) HVAC system shall be a variable capacity, direct expansion (DX) heat pump engineered system. The outdoor unit shall have a single inverter compressor. The system shall consist of an outdoor unit, multiple indoor units (ducted, non-ducted or mixed type) refrigerant piping and integrated system controls. Each indoor unit shall be controlled individually.

C. VRF heat pump system shall be a 2-pipe, heat pump system consisting of an outdoor unit connected to single/multiple indoor units. All indoor units shall be in the same mode (heating/cooling) at the same time.

1. Outdoor Unit shall be capable of the following operating ambient range.

a. Heat Pump System

1) Cooling: 23°F DB to 118°F DB

2) Heating: -4°F WB to 60°F WB

2. General

   a. The air-conditioning system shall use R410A refrigerant.

   b. Each system shall have one air source outdoor unit.

   c. Refrigerant circuit for Heat Pump System

      1) The refrigerant circuit shall be field piped with manufacturer supplied Y-
      branches or Header fittings to connect to multiple (ducted, non-ducted or
      mixed) indoor units to effectively and efficiently control heating or cooling
      operation of the VRF system.

      2) All refrigerant pipes between outdoor unit and Y- branch or Header and
      from Y- branch or Header to indoor units shall be individually field
      insulated.

   d. Factory installed microprocessor controls in the outdoor unit, and indoor units shall perform functions to efficiently operate the VRF system and communicate in a daisy chain configuration from outdoor unit to indoor units via RS485.

   e. The system shall have the ability to connect up to 9 indoor units.

   f. The maximum allowable system combination ratio shall be 130% - no exceptions.

   g. The sum of connected nominal capacity of all indoor units shall range from 50% to 130% of outdoor unit nominal capacity to ensure the VRF system will have sufficient capacity to handle the building space loads at peak design.

   h. The cabinet(s) shall be internally assembled, wired and piped from the factory.

   i. The factory assembled system shall have the outdoor unit supplied with refrigerant strainer, check valves, oil separator, accumulator, hot gas bypass valve, 4-way reversing valve, electronic expansion valve(s), sub-cooler, high side and low side Schrader valves, and high/low service valves.

3. Piping Capabilities

   a. The system shall be capable of operating at an elevation of 164 feet above or 131 feet below the indoor units.

   b. The system shall be capable of operating with up to 984 equivalent length feet of liquid line refrigerant piping in the network.

c. The system shall be capable of operating with up to 574 equivalent length feet of refrigerant piping between the outdoor unit and farthest indoor unit.

d. The elevation difference between two indoor units shall not exceed 49 feet.

4. Defrost Operations

a. The outdoor unit shall be capable of auto defrost operation to melt accumulated frost off the outdoor unit heat exchanger.

b. The defrost cycle timing shall be determined by the system's ability to achieve a target head pressure value.

5. Oil Management

a. The system shall have an oil injection mechanism to ensure a consistent film of oil
on all moving compressor parts at low speed.

b. The system shall have an oil separator to separate oil mixed with the refrigerant
gas during compression and return oil to the compressor.

c. The system shall have an oil return cycle algorithm which when activated opens all
electronic expansion valves to flush oil back to compressors.

6. Cabinet

a. Outdoor unit cabinet shall be made of 22-gauge galvanized steel with an enamel finish.

b. Outdoor unit cabinet finish shall be tested in accordance with ASTM B-117 salt spray test procedure for a minimum of 1000 hours.

c. The units shall have a removable front corner service panel to allow access to:

1) Major components

2) Service tool connections

3) DIP switches

4) System diagnostic display

5) Printed circuit boards

d. The cabinet shall have piping knockouts to allow refrigerant piping to be
connected at the front, through the right side, or up through the bottom of the unit.

e. The cabinet shall have fan guards for each fan made of heavy-duty polymeric resin.

7. Fan Assembly

a. The unit shall be equipped with two direct drive variable speed propeller fans with
Brushless Digitally Controlled (BLDC) motors with a horizontal air discharge.

b. The fan(s) blades shall be made of Acrylonitrile Butadiene Styrene (ABS)
polymeric material.

c. The fan motors shall be equipped with permanently lubricated sealed ball bearings.

d. The fan motor(s) shall be variable speed with a maximum operating speed of 950 RPM.

8. Outdoor unit Coil

a. The unit shall have a factory-built coil comprised of aluminum fins mechanically
bonded to copper tubing.

b. The aluminum fin heat transfer surfaces shall have factory applied corrosion
resistant GoldFin™ coating.

c. The outdoor unit coil shall be leak tested to a standing pressure of 551 psig.

d. The outdoor unit coil shall have a minimum of 2 rows

e. The coil for each cabinet shall have a minimum of 17 Fins per Inch (FPI).

f. The outdoor unit coil shall be protected with a heavy gauge steel wire guard.

g. The coil guard shall have a baked enamel finish.

9. Compressor

a. The outdoor unit shall be equipped with one hermetically sealed, digitally controlled, inverter driven, twin rotor compressor.

b. The compressor shall be capable of operating at a frequency range between 25 Hz and 90 Hz in cooling mode and 25Hz and 100Hz in heating mode.

c. The compressor shall be equipped with a 60 Watt crankcase heater.

d. The compressor shall be provided with a full charge of manufacturer Polyvinyl Ether (PVE) oil.

e. The compressor bearing(s) shall be provided with Teflon™ coating.

f. The compressor shall be mounted on rubber isolation grommets.

g. The compressor shall be wrapped with heat resistant, sound attenuating blanket.

h. The compressor(s) shall be protected with:

1) High and low Pressure cutout switch

2) Over-current /under current protection

3) Phase failure

4) Phase reversal

10. Sound Levels

a. Each outdoor unit shall be rated with a sound level not to exceed 54 dB(A) when tested in an anechoic chamber under ISO3745 standard.

11. Sensors

a. Each outdoor unit shall be equipped with

1) Suction temperature sensor

2) Discharge temperature sensor

3) High Pressure sensor

4) Low Pressure sensor

5) Outdoor temperature sensor

6) Outdoor unit heat exchanger temperature sensor

2.5 CONTROLLERS

A. Remote controller for indoor units shall be capable of monitoring and controlling up to 16 indoor units (1 group). The Remote Controller shall be capable of controlling the group in terms of On/Off, Mode of Operation, Fan Speed, and space temperature set point based on the available functions of the connected system. Additionally, the Remote Controller Remote Controller will be available with or without Mode of Operation control, and offered in two colors, black or white.

1. General:

a. The Simple Remote Controller shall communicate to the VRF indoor unit via
included communications cable.

b. The Simple Remote Controller shall be approximately 2-3/4" W x 4-3/4" H x
9/16" D in size.

c. The Simple Remote Controller shall be able to display temperature in °F or °C
based on user settings.

d. The Simple Remote Controller shall be able to monitor and control up to sixteen
indoor units (one group) as a single zone.

e. Up to two Simple Remote Controllers shall be connectable to a single group and
operate in a master/slave configuration.

f. The Simple Remote Controller shall be shipped with a communications cable for connection to indoor units.

2. Basic Functions:

Function	Description	Monitor	Control
On/Off	On/Off operation for group	X	X
Mode of Operation**	Mode of Operation for group (Heat/Cool/Fan/Dry/Auto)	X	X
Set Point	Space temperature set point for group. Setting temperature range 64°F-84°F depending on operation mode and connected equipment.	X	X
Space Temperature	Display measured space temperature	X	
Fan Speed	Select fan speeds	X	X

3. Electrical:

a. The Remote Controller shall be powered via the indoor units.

B. Central Controllers

1. Overview:

a. The Basis of Design LG AC SMART IV VRF Central Controller shall be capable
of monitoring and control of up to 128 indoor units or 130 Input/Outputs

points
through its touchscreen interface and embedded web browser. The VRF Central
Controller shall provide multiple energy management schemes and control of
third-party equipment when paired with associated I/O controllers. Additionally,
the VRF Central Controller shall be capable of providing daily, weekly, yearly,
and holiday programmable scheduling of Occupied/Unoccupied settings, On/Off,
Mode of Operation, set point and fan speed based on the available functions of the
connected system.

2. General:

   a. The VRF Central Controller shall communicate to the LG Multi V™ VRF indoor unit via the VRF RS-485 daisy-chain communication protocol.

   b. The VRF Central Controller shall have a 10.2” backlit touchscreen LCD display screen.

   c. The VRF Central Controller shall have web access with user control.

   d. The VRF Central Controller shall be able to generate an operation and error history log with reporting capabilities.

   e. The VRF Central Controller shall be able to control up to 128 indoor units in a group or as a single zone.

   f. The VRF Central Controller shall support two digital input and two digital outputs for device interlock.

   g. The VRF Central Controller shall have two set point auto changeover.

   h. The VRF Central Controller shall have occupied/unoccupied set point control.

   i. The VRF Central Controller shall have remote controller lock (All, Setpoint, Mode, and Fan Speed).

   j. The VRF Central Controller shall have error e-mail notification.

   k. The VRF Central Controller shall have visual floor plan navigation.

3. Basic Functions:

Function	Description	Monitor	Control
On/Off	On/Off operation for group	X	X
Mode of Operation	Mode of Operation for group (Heat/Cool/Fan/Auto/Dry)	X	X
Set Point	Space temperature setpoint for group. Setting temperature range 64°F-84°F depending on operation mode and connected equipment.	X	X
Space Temperature	Display measured space temperature	X	
Fan Speed	Select fan speeds Hi-Mid1-Mid2-Low-Auto	X	X
Airflow Direction	Select air direction settings Auto/Swing/Fixed	X	X
Group Control	Control and Monitor a group or multiple groups	X	X
Operational and Event Log History	Record system operation and fault code history	X	
Language Selection	Choice of multiple languages		X

4. Advanced Functions:

Function	Description	Monitor	Control

Schedule	Daily, Weekly, Yearly and Holiday programmable schedule Minimum of five events per day with On/Off, Occupied/Unoccupied, Mode, Set temperature, and	X	X

	Fan		
Timed Override	Timed override of Unoccupied settings	X	X
Occupied/Unoccupied Setting	Ability to have different settings for both modes	X	X
Energy Use Display	Display actual operational time and power consumption.	X	X
Operation Run Time Limit	Limit the run time of an indoor unit	X	X
Two setpoint auto operation	Automatically manage room temperature for heating and cooling	X	X
Peak/Demand Control	Control and Limit power consumption of external devices	X	X
Temperature setpoint range limit	Ability to limit heating and cooling setpoint ranges	X	X
Remote controller Lock setting	Ability to lock out operation of the controller	X	X

5. Electrical:

a. The VRF Central controller shall be powered via 24 VAC or 12 VDC.

PART 3 - EXECUTION

3.1 INSTALLATION

A. Install units level and plumb.

B. Install evaporator-fan components using manufacturer's standard mounting devices securely fastened to building structure.

C. Install ground-mounted, compressor-condenser components on 4-inch- (100-mm-) thick, reinforced concrete base that is 4 inches (100 mm) larger, on each side, than unit. Concrete, reinforcement, and formwork are specified in Section 033000 "Cast-in-Place Concrete." Coordinate anchor installation with concrete base.

D. Install ground-mounted, compressor-condenser components on polyethylene mounting base.

E. Install roof-mounted, compressor-condenser components on equipment supports. Anchor units to supports with removable, cadmium-plated fasteners.

F. Install compressor-condenser components on restrained, spring isolators with a minimum static deflection of 1 inch (25 mm). See Section 230548 "Vibration Controls for HVAC Piping and Equipment."

G. Install and connect precharged refrigerant tubing to component's quick-connect fittings. Install tubing to allow access to unit.

3.2 CONNECTIONS

A. Piping installation requirements are specified in other Sections. Drawings indicate general arrangement of piping, fittings, and specialties.

B. Where piping is installed adjacent to unit, allow space for service and maintenance of unit.

C. Duct Connections: Duct installation requirements are specified in Section 233113 "Metal Ducts." Drawings indicate the general arrangement of ducts. Connect supply and return ducts to split-system air-conditioning units with flexible duct connectors. Flexible duct connectors are specified in Section 233300 "Air Duct Accessories."

3.3 FIELD QUALITY CONTROL

A. Perform tests and inspections.

1. Manufacturer's Field Service: Engage a factory-authorized service representative to inspect components, assemblies, and equipment installations, including connections, and to assist in testing.

B. Tests and Inspections:

1. Leak Test: After installation, charge system and test for leaks. Repair leaks and retest until no leaks exist.

2. Operational Test: After electrical circuitry has been energized, start units to confirm proper motor rotation and unit operation.

3. Test and adjust controls and safeties. Replace damaged and malfunctioning controls and equipment.

C. Remove and replace malfunctioning units and retest as specified above.

D. Prepare test and inspection reports.

3.4 DEMONSTRATION

A. Engage a factory-authorized service representative to train Owner's maintenance personnel to
adjust, operate, and maintain units.

END OF SECTION

SECTION 26 05 10

ELECTRICAL WORK – GENERAL

PART 1 - GENERAL

1.01 DESCRIPTION:

A. Provide complete and operational systems for both normal and standby electric power systems, normal and emergency lighting systems, grounding systems and other specified systems, including the installation and wiring of miscellaneous equipment and devices. Perform all work and testing as indicated and in compliance with Contract Documents.

1. Provide conduit, wiring and connections for power, control, lighting, instrumentation and alarms for equipment furnished by others unless otherwise specified and indicated.

2. Provide temporary circuits, overcurrent devices, conduit and wiring, and other equipment required during construction and change-over from existing to proposed electric system. Perform work at the convenience of the Owner.

3. Provide electrical system studies including a short circuit and protective device coordination study and an arc-flash study for the electrical distribution system constructed under this contract.

4. Install all raceways and equipment to meet the seismic design criteria of Division 01. Raceways supports and equipment anchoring shall be provided as specified in the Division 26 sections which form a part of the Contract Documents.

5. Disconnecting, removing, and relocating existing electrical equipment is a part of this Contract and is specified under Division 02 and this Section. Make equipment scheduled for removal free of shock hazard.

6. Provide electrical relocation work associated with the relocation of equipment for the existing and new facilities, including disconnecting all existing wiring and conduits and providing new wiring and conduit to the relocated equipment. Make equipment scheduled for relocation free of electrical shock hazard.

7. The equipment enclosure classification of the plant areas are indicated on the drawings. Provide all equipment, devices and material meeting the requirements for these area classifications unless otherwise noted or specified.

8. Review the electrical underground system and the civil yard piping. Install the electrical underground system in a manner that avoids conflicts with manholes, catch basins, etc. provided under other Divisions of the specifications

1.02 REFERENCES:

A. National Fire Protection Association (NFPA):

1. 70: National Electrical Code (NEC).

1.03 SEQUENCING AND SCHEDULING:

A. Coordinate electrical equipment installation with other building components.

B. Arrange for chases, slots and openings in the building structures during the progress of construction to allow for the electrical installation.

C. Coordinate installing required supporting devices and set sleeves in poured-in-place concrete and other structural components as they are constructed.

D. Sequence, coordinate and integrate the installation of electrical materials and equipment for efficient flow of the work.

E. Coordinate the installation of large equipment prior to closing in the building.

F. Sequencing and scheduling work at existing facilities:

1. Remove and demolish equipment and materials in such a sequence that the existing and proposed plant will function properly with no disruption of power. Continuous service is required on all circuits and outlets affected by the work detailed in the contract, except where the Owner will permit an outage for a specific time. Obtain Owner's consent before removing any circuit from continuous service.

2. Coordinate electrical power outages to the electrical systems and equipment with the Owner. Where duration of proposed outage cannot be allowed by the Owner, phase the work to allow the system or equipment to be re-connected to the electrical power system within the time frame allowed by the Owner or provide temporary power connections as required to maintain service to the systems or equipment. The temporary power can be from a generator or another part of the facility not affected by the outage provided there is sufficient spare capacity.

1.04 QUALITY ASSURANCE:

A. Provide in accordance with Division 01 and as specified.

B. Install electrical work in conformance with latest rules and requirements of National Fire Protection Association Standard No. 70 (National Electrical Code) and in accordance with requirements of State and Local Codes.

1.05 QUALIFICATIONS OF ELECTRICAL SUBCONTRACTOR

A. The Electrical Subcontractor shall have been engaged in work of a similar nature to this contract for the past 5 years.

B. The Electrical Subcontractor shall have a minimum of five projects of equal or greater size with the type of equipment specified under this project.

1.06 SUBMITTALS:

A. Submit the following in accordance with Section 01 33 00:

1. The following defines a minimum for all Division 26 shop drawing and data submittals:

a. Submit shop drawings delineated by specification number with all information for one piece of equipment provided as one package.

b. Partial submittals will be returned without action.

c. Submit bills of material: Include a numbered list of all components, with manufacturer's name, catalog number, rating, and other identification. Place item number or similar identification on all other drawings where item appears.

d. Submittal shall include:

(1) Manufacturer’s drawings

(2) Panel layout

(3) Equipment layout

(4) Schematic diagram

(5) One line diagram

(6) Control sequence diagrams

(7) Interconnection diagrams

(8) Wiring diagrams

(9) Catalog data

e. Submit only completed drawings showing all local and remote devices associated with each item.

f. Mark shop drawings and data submitted showing only items applicable to specific contract.

g. Where additions and modifications are made to existing equipment, provide drawings which include both retained existing equipment and new work.

h. Submit time-current characteristic curves for all submitted protection devices such as circuit breakers and fuses.

i. Submit other documentary or descriptive information as required for each assembly to demonstrate compliance with the applicable contract documents.

2. Shop drawings and data are required for the following list:

a. Starting Equipment Data List -Submit blank list initially to verify acceptable format. Submit final list at completion of the project.

b. Conduit and Fittings

c. Wire and Cable

d. Wiring Devices

e. Transformers

f. Grounding Equipment and Devices

g. Panelboards

h. Lighting Fixtures and Accessories

i. Enclosures

j. Control Panels

k. Safety Switches

l. Switchboards

m. Field Acceptance Test Reports

n. Record Drawings

3. Submit instruction manuals for installation, operation, and maintenance of equipment, and parts list for equipment listed below. Specifically mark standard publications forming a part of this contract. Cross out, blank out, or otherwise delete non-applicable items. Submittals which do not clearly indicate items and features provided shall be rejected.

a. Control Panels

1.07 INTERFERENCE AND ERRONEOUS LOCATIONS:

A. Locations of electrical equipment, devices, outlets, and similar items, as indicated, are approximate only. Exact locations shall be determined during construction.

B. Verify in field, all data and final locations of work installed under other sections of specifications, required for placing of electrical work.

C. In case of interference with other work or erroneous locations with respect to equipment or structures, furnish all labor and materials to complete the work.

1.08 SEISMIC DESIGN REQUIREMENTS:

A. Conform to the requirements indicated on the structural drawings and as specified in Division 01 and in Division 26.

B. All raceways and equipment installed under Division 26 shall use earthquake resistant supporting systems as specifically required in each applicable section.

1.09 APPROVAL AND MARKING EQUIPMENT:

A. Insure that devices and materials are listed and/or labeled by UL, wherever standards have been established by that organization. Where a UL listing is not available for equipment, submit certified test reports of a Nationally Recognized Testing Laboratory (NRTL), approved by the local inspecting authority, indicating that equipment is in conformance with local code requirements or any other applicable requirements. Tests and inspections for approval of equipment shall be performed at no additional cost to Owner.

B. Clearly mark equipment, devices and material with name or trademark of manufacturer and rating in volts and amperes and other pertinent information on a nameplate.

1.10 ELECTRIC SERVICE:

A. Electrical power system for the facility operates at 480/277 volt, 3-phase, 4 wire, 60 Hertz.

1. Provide replacement electrical low voltage distribution system that operates on 208/120 volt, 3-phase, 4-wire, 60 Hertz obtained from the power system by dry-type transformer.

B. Earth and rock excavation, backfill, concrete masonry, concrete reinforcement, and construction joints required for electrical work is included under this section and shall conform to requirements specified under applicable sections of Contract for General Construction.

1.11 EQUIPMENT SPECIFIED ELSEWHERE:

A. Certain items of control equipment and other equipment are indicated on electrical drawings for connection, but are specified in other sections pertaining to plumbing, heating, ventilating and air conditioning, mechanical process, instrumentation, etc. Such items are not furnished as part of electrical work.

B. Include an allowance of $10,000 to cover cost of power company's charges and fees for providing service. If the total cost of such charges is greater or less than the allowance, a debit or credit of difference in cost will be made to Owner.

1. Perform all work in accordance with power company's requirements and in manner approved by power company.

2. Notify power company, in writing, within two weeks after the contract award date concerning incoming service requirements.

C. The final, complete installation shall comply with all state and local statutory requirements having jurisdiction. The Contractor shall arrange for all necessary permits, pay all fees and arrange for all required inspections by local authorities. In general, all work shall comply with the requirements of the National Electrical Code, all state codes and the codes and ordinances of the city or town in which the work is to be done.

PART 2 - PRODUCTS

2.01 METERING EQUIPMENT:

A. Electrical Contractor: Furnish secondary metering equipment per the specifications of the Arizona Public Service Company.

PART 3 - EXECUTION

3.01 REMOVAL AND RELOCATION OF MATERIAL AND EQUIPMENT:

A. Carefully dismantle and salvage electrical equipment, switches, fixtures, conduits, cables, wiring, boxes, as necessary to carry out proposed changes. Rehabilitate and relocate items of equipment as required and as indicated or specified.

1. Deliver material and equipment not indicated for reuse to Owner for his disposal.

B. Remove from site and dispose of material and equipment not indicated for reuse.

3.02 WORK IN EXISTING STRUCTURES:

A. In general, any or all existing electrical equipment and services are to remain in operation and shall not be disturbed unless otherwise noted in these Specifications and/or on the drawings or as required for the proper execution of the work.

B. In each area of the work, disconnect and carefully remove the existing electrical equipment and devices so noted. With the exception of items indicated as having to be re-used, all such existing equipment and devices shall be disposed of as specified herein. If not required by the Owner, remove them from the premises and site. All existing electrical equipment and devices indicated as not removed or abandoned are to be maintained in operation and any circuits disturbed by the construction shall be restored.

C. Maintain existing electrical services and systems to and in the buildings throughout the project and all "down-time" shall be scheduled at least four weeks in advance with the permission of the CM and such scheduling shall be rigidly adhered to.

3.03 DEMOLITION:

A. Survey the existing electrical systems and equipment identified for removal with representatives from the other trades prior to performing any demolition work. Identify all conduit and equipment to be removed with tags or paint.

B. Where a piece of equipment is to be removed all associated ancillary components (e.g. solenoid valves, pressure switches, etc) and associated wiring and conduit shall also be removed.

C. Equipment, building or structures scheduled for complete demolition shall be made safe from electrical shock hazard prior to demolition. Disconnect all electrical power, communications, alarm and signal system.

D. Equipment scheduled to be turned over to the Owner shall be carefully disconnected, removed and delivered to the Owner where indicated. Provide labor, hoisting and transportation of the equipment. All other miscellaneous electrical materials, devices, etc., associated with the equipment being turned over shall be demolished and removed from the site.

E. Remove electrical work associated with equipment scheduled for demolition except those portions to remain or be reused.

F. Unless otherwise specifically noted, remove unused exposed conduit and support systems back to point of concealment including abandoned circuit above accessible ceiling finishes. Removed unused wiring back to source (or nearest point of usage).

G. Disconnect abandoned outlets and removed devices. Removed abandoned outlets if conduit services them is abandoned or being removed. Provide blank covers for abandoned outlets which are not removed.

H. Disconnect and remove abandoned electrical equipment unless otherwise indicated or specified.

I. Disconnect and remove abandoned luminaries. Remove brackets, stems, hangers and other accessories.

J. Repair adjacent construction and finishes damaged during demolition and extension work.

K. Where electrical systems pass through the demolition areas to serve other portions of the premises, they shall remain or be suitably relocated and the system restored to normal operation.

L. The electrical and process equipment to be removed or relocated under this contract has been identified on the Drawings.

M. Trace out existing wiring that is to be relocated, or removed and perform the relocation or removed work as required for a complete operating and safe system.

N. Remove exposed conduits, wireways, outlet boxes, pull boxes and hangers made obsolete by the alterations, unless specifically designated to remain. Patch surfaces and provide blank covers for abandoned outlets which are removed.

O. All equipment, materials, controls, motor starters, branch and feeder breakers, panelboards, transformers, wiring, raceways, etc. furnished and installed to the temporarily keep circuits energized shall be removed when the permanent installation is fully operational.

3.04 PROTECTION OF ELECTRICAL EQUIPMENT:

A. Store equipment in compliance with manufacturer's recommendations and as specified herein.

B. Protect electrical equipment from the weather, especially from water dripping or splashing upon it, at all times during shipment, storage, and construction.

C. Do not store equipment outdoors.

D. Where equipment is installed or stored in moist areas, or unheated buildings, provide acceptable means to prevent moisture damage. Provide uniformly distributed source of heat in electrical equipment to prevent condensation and damage to electrical insulation systems.

3.05 DEFECTIVE OR DAMAGED EQUIPMENT:

A. Damaged equipment shall not be used. Equipment damaged in shipment, storage, installation or through other means shall be replaced without additional cost to the Owner.

B. All equipment showing signs of water damage shall be rejected regardless of dielectric test results.

C. All electrical equipment is considered “in storage” regardless of location until first energized. Manufacturer’s recommendations for storage precautions, conditions and care shall be followed.

3.06 STARTING EQUIPMENT DATA LIST:

A. Obtain data from the equipment supplier shop drawing submittals or equipment nameplates, and prepare a complete tabulation of all motors over 1/3 hp, electric heaters over 3 kW, and starting equipment for both, to be furnished on the project.

1. Include in tabulation firm the following information:

a. Name and identification of equipment.

b. Manufacturer.

c. Horsepower or kilowatt rating.

d. Voltage.

e. Phase.

f. Speed.

g. Full load current.

h. Locked rotor current or code letter.

i. Type of enclosure (open drip-proof, totally enclosed, fan cooled, etc.).

j. NEMA size of starter or contactor.

k. Overload heater size.

l. Type of starter (full-voltage, reduced-voltage, autotransformer, etc.).

m. Breaker trip setting or fuse size.

n. Voltage of starter operating coil.

o. If starter is at a motor control center, list motor control center number.

2. Final acceptance of the electrical system is contingent upon submittal of the complete motor and electric heater tabulation.

3. Arrange tabulation in groups by MCC or building location.

4. Furnish six copies of the tabulation to the CM when a submission is made.

3.07 DRAWINGS AND SPECIFICATIONS:

A. Drawings and specifications are typical of work to be done and of the arrangement desired. Provide accessories and appurtenances which the CM deems functionally necessary for a complete installation, whether or not explicitly indicated or described.

3.08 AS-BUILT DRAWINGS:

A. The Contractor shall maintain a master set of as-built drawings showing the changes and deviations from the contract drawings.

B. A minimum of 30 days prior to application for Final Payment, submit two sets of drawings for approval that are marked to show the as-installed equipment, devices, raceway locations and wiring. The markings on the drawings are to be neat, clean and legible.

3.09 CONTRACT CLOSEOUT:

A. Provide in accordance with Section 01 77 00.

END OF SECTION

SECTION 26 05 20

ELECTRIC WIRES AND CABLES

PART 1 - GENERAL

1.01 DESCRIPTION:

A. Provide wires and cables for complete electrical systems as indicated and in compliance with Contract Documents.

1.02 REFERENCES:

A. ASTM International (ASTM):

1. B3: Soft or Annealed Copper Wire.

2. B8: Concentric-Lay-Stranded Copper Conductors, Hard, Medium-Hard, or Soft.

3. B33: Tinned Soft or Annealed Copper Wire for Electrical Purposes.

B. Insulated Cables Engineers Association, Inc. (ICEA)/National Electrical Mfg's Association (NEMA):

1. S-61-4021/WC 5: Thermoplastic Insulated Wire & Cable.

2. S-66-524/NEMA WC 7; Cross-Linked-Thermosetting-Polyethylene Insulated Wire and Cable.

3. S-68-516/WC 8: Ethylene-Propylene-Rubber-Insulated Wire & Cable.

C. National Fire Protection Association (NFPA):

1. 70: National Electrical Code (NEC).

E. American National Standards Institute (ANSI)/Telecommunications Industry Association (TIA)/Electronic Industries Association (EIA):

1. ANSI/TIA/EIA-568-B; Commercial Building Telecommunications Cabling Standards.

F. Underwriters Laboratories, Inc. (UL):

1. 44: Thermoset-Insulated Wires and Cables.

2. 83: Thermoplastic-Insulated Wires and Cables.

3. 854: Service Entrance Cables.

1.03 SUBMITTALS:

A. Submit the following shop drawings in accordance with Section 01 33 00:

B. Submit shop drawings and manufacturer's product data in accordance with the requirements of Section 26 05 00.

1.04 DELIVERY STORAGE AND HANDLING:

A. Comply with the requirements specified in Division 1.

B. Deliver wire and cables in full reels protected against injury. Deliver reels with factory attached UL approved tags showing the manufacturers name and the type of insulation, size, and length of wire in each coil or reel.

C. Accept wire and cable on site in manufacturer's packaging. Inspect for damage.

D. Store and protect in accordance with manufacturer's instructions.

E. Protect from weather. Provide adequate ventilation to prevent condensation.

1.05 DESIGN CRITERIA:

A. Wire for lighting, single phase circuits shall be Type XHHW or THWN-THHN.

B. Wire for three phase circuits shall be Type XHHW.

C. Service conductors shall be 600V rated type RHW.

D. Single conductor wire for control, indication and metering shall be Type THWN-THHN No. 12 or 14 AWG, stranded.

E. Multi-conductor control cable shall be used for the underground system and shall be No. 12 or 14 AWG, stranded with overall jacket.

F. Wire for process instrumentation shall be twisted shielded pairs No. 16 AWG, stranded with overall jacket.

G. Ground wires shall be Type THW, green. Bare ground wires shall be soft drawn copper, 98 percent conductivity.

H. Wire for power circuits installed in duct banks shall be type RHW.

PART 2 - PRODUCTS

2.01 MANUFACTURERS:

A. 600V Cable:

1. Okonite.

2. Southwire.

3. American Insulated Wire.

B. Control and Metering Wire:

1. Belden Wire and Cable.

2. Alpha Wire.

3. Coleman Cable.

C. Cable Fireproofing Tape:

1. MAC Products, Inc.

2. 3M Electrical Products.

2.02 MATERIALS AND COMPONENTS:

A. Furnish copper conductors. Material and stranding of conductors to conform to ASTM B3, ASTM B33, and to ASTM B8, for the appropriate class.

B. Uncoated, soft or annealed copper wire conforming to ASTM B3.

C. Wires and Cables for Maximum 600-Volt Power Circuits: For No. 8 AWG gauge and smaller provide type THWN/THHN or RHW. Where used in lighting or receptacle branch circuits provide No. 12 AWG gauge and No. 10 AWG gauge as solid conductor. Provide other wire with Class C stranding. Provide No. 6 AWG gauge and larger as XHHW-2 with Class B stranding. Provide wires and cable conforming to UL 83.

D. Wires and Cables for Control, Indicating, Metering, or Alarm Circuits: Single and multi-conductor control cable, copper conductors, Class B or C stranding. Insulation; 600-volt polyethylene, polyvinylchloride, or EPR. Continuous rating of 90C dry and 75C wet. Color coding conforming to Table K-2, ICEA/NEMA S-61-4021/WC 5.

E. Shielded Cable for Instrumentation Wiring: 7-strand copper conductors, size No. 16 AWG. Insulate conductors individually with color coded polyethylene or polyvinylchloride. Twist pairs with varying lay (if more than one pair) and cover with cable tape and copper or aluminum coated Mylar shielding tape and tinned copper drain wire. Jacket: polyvinylchloride. Cables: rated 600 volts and 90 degrees C.

F. Category 5e Cable: Category 5e cable shall consist of 4 twisted pairs of different lay and ground wires, enclosed by an overall conductive mylar backed aluminum foil shield. This shall be enclosed by an overall thermoplastic jacket. The cable shall meet the applicable requirements of ANSI/TIA/IEA-568-B.

PART 3 - EXECUTION

3.01 GENERAL:

A. Perform work in accordance with the National Electrical Code.

B. Provide power cable identification as follows:

System Voltage	Neutral	Phase A	Phase B	Phase C
208/120V	White	Black	Red	Blue
240/120V	White- Gray Stripe	Black- Blue Stripe	Red- Blue Stripe	None
480/277V	Gray	Brown	Orange	Yellow

C. Use green to identify insulated ground conductors.

NOTE: Colored insulation, tapes or sleeves may be used to provide color coding. Insulated ground conductors must have green covering.

D. Permanently post means of identification of grounded and ungrounded conductors for each nominal voltage system at each panelboard and motor control center.

E. In power and multiconductor cables manufactured without a grounding conductor identify one of the multiconductors as the equipment grounding conductor at each cable end and at every point where the conductors are accessible.

3.02 INSTALLATION OF WIRING:

A. Unless otherwise indicated, use no conductor smaller than No. 12 AWG for power, No. 14 AWG for control, and No. 16 AWG for shielded applications.

B. Install conductors continuous from outlet to outlet and make no splices except within outlet or junction boxes.

C. Install cable in underground raceway system without splices. There shall be no splices between connection points unless otherwise indicated.

D. Draw all conductors contained within a single conduit at the same time.

E. Apply wire pulling compound to conductors being drawn through conduits. Use pulling compound, Minerallac No. 100, Y-er-Eas, Yellow 77, High Performance Polywater Cable Lubricant or acceptable equivalent.

F. Use no cable bend with radius of less than eight times its diameter.

G. Wires and cables installed without prior submittal review are subject to removal at no additional expense.

3.03 INSTALLATION OF DIRECT BURIAL CABLE:

A. Install trench not less than 36 inches (1070 mm) deep below finished ground grade and 8 inches (205 mm) wide at bottom. Cover bottom of trench with layer of selected fine sand 6 inches (150 mm) deep. Sag cable carefully into trench with no kinks or excess cable. Backfill trench with selected fine sand 6 inches (150 mm) deep; then provide a 2 inch (50 mm) thick, 36 inches (950 mm) wide, Class B concrete slab. Pour width of trench or use concrete cast blocks of same dimensions. Completely backfill trench with material free of large stones and debris.

B. Where direct-burial cables run under roadway, contain them in steel conduits. Extend conduit for minimum distance of 6 feet (2 m) on each side of roadway wherever possible.

C. Where direct-burial cables enter conduits beneath ground at building, seal to prevent entrance of water using gasketed or permanently inflatable seals.

D. Locate direct-burial cable markers at approximately every 200 feet (61 m) along run and at each change of direction.

3.04 CONDUCTOR IDENTIFICATION:

A. Label each wire at both termination points. Carry individual conductor or circuit identification throughout, with circuit numbers or other identification clearly stamped on terminal boards and printed on directory cards in distribution cabinets and panelboards.

B. Identify each wire in junction boxes, cabinets, and terminal boxes where total number of control, indicating, and metering wires is three or more and no terminal board is provided, including all power wire. Where no termination is made use a plastic-coated, self-adhesive, wire marker and where termination is made use a, plastic, pre-printed sleeve wire marker.

C. In cases similar to above where terminal boards are provided for the control, indicating, and metering wires, identify all wires including motor leads and other power wires too large for connection to terminal boards, by sleeve wire markers as specified above.

D. In manholes and handholes, identify each power wire by laminated plastic tag located so it is easily seen. Control wires to be bundled and marked as listed in conduit and wire schedule.

3.05 CONNECTORS, TERMINAL LUGS AND BOARDS:

A. For wiring of circuits consisting of No. 10 or No. 12 AWG solid wires, such as for lighting branch circuits, use self-insulated pressure type connectors for all splices or joints.

B. Terminate all wires connected to terminal boards, terminal blocks, or to other similar terminals by means of ring and tongue, nylon self-insulated, tin-plated copper pressure terminals.

C. Terminal boards shall be 600 volts and rated for 125 percent of the ampacity of the connected circuit. They shall have screw terminals, with white marking strips for wire identification, of the 4-, 6-, 8-, or 12-pole type, as necessary.

D. Wire connections for which terminals are not supplied, for example, at solenoids or motor terminal junction boxes:

1. 10 AWG and smaller: Use self insulated pressure-type connectors.

2. 8 AWG and larger: Use insulated, mechanical type with set screw or follower bearing directly on the wire. Split bolt connectors are not acceptable.

E. Clearly and permanently mark terminal strips with ink or indelible pencil. Mark each wire consistently throughout entire system, using notation of wires given on manufacturer's wiring diagrams wherever possible.

3.06 FIELD TESTING:

A. Submit results of all cable tests on forms indicating cable size, voltage, and date with name of tester and witness.

3.07 CONTRACT CLOSEOUT:

A. Provide in accordance with Section 01 77 00.

END OF SECTION

SECTION 26 05 26

GROUNDING AND BONDING FOR ELECTRICAL SYSTEMS

PART 1 - GENERAL

1.01 DESCRIPTION:

A. Provide a single, complete, integrated grounding system, including conductors, raceways, and connections, as indicated and in compliance with Contract Documents, and in accordance with the National Electrical Code Article 250 and the National Electrical Safety Code.

B. Include grounding of switchgear, substations, motor control centers, electric equipment enclosures etc., outdoor substations, transformers, switch structures, etc.; ground grid systems with ground rod and water pipe connections; structural steel, and lightning protection system.

C. Include grounding conductors completely inter-connecting water supply pipe, ground rods, ground grid, substation, switchgear and motor control center ground buses, other distribution equipment, and other groundable equipment.

1.02 REFERENCES:

A. American National Standards Institute (ANSI)/Institute of Electrical and Electronics Engineers (IEEE):

1. ANSI/IEEE C2: National Electrical Safety Code.

B. ASTM International (ASTM):

1. B3: Standard Specification for Soft or Annealed Copper Wire.

2. B8: Standard Specification for Concentric-Lay-Stranded Copper Conductors, Hard, Medium-Hard, or Soft.

3. B33: Standard Specification for Tinned Soft or Annealed Copper Wire for Electrical Purposes.

C. Institute of Electrical and Electronics Engineers (IEEE):

1. Standard 81: Guide for Measuring Earth Resistivity, Ground Impedance, and Earth Surface Potential of a Ground System.

D. National Fire Protection Association (NFPA):

1. 70: National Electrical Code.

E. Underwriters Laboratories (UL):

1. 467: Standard for Grounding and Bonding Equipment.

1.03 SUBMITTALS:

A. Submit the following shop drawings in accordance with Section 01 33 00:

B. Submit shop drawings and manufacturers' product data in accordance with requirements of Section 26 05 10.

C. Submit catalog and dimensional data for the following:

1. Ground rods

2. Exothermic welding

3. Connecting hardware

D. Submit grounding system test results.

PART 2 - PRODUCTS

2.01 MANUFACTURER'S COMPLIANCE:

A. Manufacturer's acceptance contingent upon products' compliance with the specifications.

2.02 MANUFACTURERS:

A. Ground Rods:

1. ERICO Products Inc.

2. Galvan Electrical Products.

3. Nehring Electrical Works.

B. Exothermic Welding:

1. ERICO Products, Inc.

2. American Brass Mfg. Co.

3. Orgo-Thermit, Inc.

C. Connecting Hardware:

1. American Brass Mfg. Co.

2. Thomas and Betts

3. Anderson Electric Corp.

2.03 MATERIALS AND COMPONENTS:

A. Conductors:

1. Provide copper grounding conductors bare or insulated, sized as indicated. When not indicated on the drawing provide in accordance with the NEC. Provide protection of conductors in locations where physical damage would result from direct exposure.

2. Ground and bond wires for substations, main panels and distribution points, and ground rod connections shall be annealed bare copper conforming to ASTM B3, stranded, with 98 percent conductivity.

3. Equipment ground conductors run with circuit conductors and grounding electrode conductor shall be 600 volt with green insulation, unless noted otherwise on the Contract documents.

4. Unless noted otherwise, all conductors No. 8 AWG and larger shall be stranded, Class B in accordance with ASTM B8.

a. Uninsulated conductors shall be bare copper in accordance with ASTM B3, tinned in accordance with ASTM B33.

b. Use tinned-coated in corrosive environments including when buried in earth or embedded in concrete.

B. Ground Bus:

1. Provide a 4 by 1/4 inch (100 by 6 mm) copper bar complete with bolted type connectors as indicated.

2. Bus bar shall have 18 pre-drilled holes, two standoff insulators, two stainless steel mounting brackets and four stainless steel assembly bolts and lock washer.

C. Connectors and Fasteners:

1. Provide ground clamps which are UL listed for use on copper or brass pipes.

2. Provide ground clamps, for use on iron pipes, of galvanized or malleable iron, or of standard noncorrosive material for use on iron pipes.

3. Provide ground clamps, for use on pipes, with rigid metal base providing good contact by proper seating on the pipe. Do not use strap type clamps.

D. Ground Rods:

1. Ground rods shall conform to the requirements of NFPA 70 and UL Standard 467.

2. Ground rods shall be copper-clad steel rods not less than 3/4 inch (19 mm) in diameter and not less than 10 feet (3 m) long per section.

3. Ground rods shall be clean and smooth with the following characteristics:

   a. Cone-shaped point on the first section.

   b. Die-stamped near the top with the name or trademark of the manufacturer and the length of the rod in millimeters or feet.

PART 3 - EXECUTION

3.01 EXOTHERMIC WELDING:

A. Welding shall be by the exothermic process.

B. Within the welding procedure, include the proper mold and powder charge and conform to the manufacturer's recommendations.

C. Welding processes shall be the exothermic fusion type that will make a connection without corroding or loosening.

D. The welding process shall join all strands and not cause the parts to be damaged or weakened.

E. Completed connection or joint shall be equal or larger in size than the conductors joined and have the same current-carrying capacity as the largest conductor.

F. Paint buried ground connection with a bitumastic paint.

3.02 INSTALLATION OF GROUNDING CONDUCTORS:

A. Install grounding conductors so that they will not be exposed to physical damage. Install connections firm and tight. Arrange conductors and connectors so no strain on connections.

B. Run grounding conductors associated with direct burial cables in common trenches above cables except as indicated otherwise.

C. Bury equipment grounding conductors 30 inches deep. Bring loops or taps up for connection to equipment or other items to be grounded.

D. Where raceways are used to contain and protect grounding conductors, install in accordance with Sections 26 05 33.

E. Where bare grounding conductors are contained within metallic raceways, bond ends of raceways to conductors.

F. Install loop type, low impedance, grounding system interconnecting all components so at least two grounding connections are provided for each major item of electrical equipment. Ensure that severing of any single grounding conductor in this system does not remove grounding protection on any major item.

G. Connect structural steel to the external perimeter loop of grounding conductors installed around all sides of building foundation, buried at least 30 inches below grade. Connect to each vertical column by loop or tap. Connect two opposite points on external loop to two different points on grounding system.

H. Buried and concealed ground connections shall use exothermic welding.

I. Make accessible connections to structural members by exothermic welding process or by bolted connector. Connections to equipment or ground bus by bolted connectors.

3.03 INSTALLATION OF GROUND RODS:

A. Install ground rods in manholes in accordance with requirements specified under the section Underground Distribution Systems. Connect each grounding conductor entering a manhole to ground rod by exothermic weld.

B. Install ground rods where indicated. Install the top of the rod 12 inch (300 mm) below the ground surface.

C. Make connection to overall grounding system as indicated.

D. Ensure that final resistance of interconnected ground system is 5 ohms, or less. Measure ground resistance in normally dry conditions, and not less than 48 hours after rainfall.

3.04 EQUIPMENT GROUNDING:

A. Ground each piece of electrical equipment by means of a grounding conductor installed in raceway feeding that piece of equipment. Grounding conductors installed in conduit with insulated conductors to be furnished with green, 600 volt insulation. Ground conductors are in addition to and not to be considered as the neutral wire of the system.

B. Connect power transformer cases and neutrals to grounding system. Connect neutral ground connection at transformer terminal. Provide two separate, independent, diagonally opposite, connections for power transformers so removal of one connection will not impair continuity of other.

C. Connect two separate ground connections from ground grid to ground bus of switchgear assemblies, motor control centers, switchboards and all outdoor substation and transformer equipment. Ensure that each connection for item of equipment is from different section of ground grid.

D. Connect a grounding conductor between panelboard and grounding system. Where a grounding bar is furnished with panelboard, connect grounding conductor to bar.

E. Conduits entering metal enclosures shall utilize bonding type locknuts and grounding bushings. Locknuts that gouge into the metal enclosures are not acceptable.

F. Where conduits are not effectively grounded by firm contact with a grounded enclosure, apply grounding bushings on at least one end of conduit run. Conduit connections shall be wrench tight.

G. Install a separate grounding conductor from ground system to motors of 100 horsepower and larger, in addition to raceway system. Ground motor ground connection to motor frame, independent of mounting bolts or sliding base. Ground motor to nearest point on grounding system, unless otherwise indicated.

H. Connect grounding conductors from equipment in area where ground bus is required to ground bus. Connect ground bus to grounding system. Mount ground bus on 600 volt pedestal insulators.

I. Connect lightning arresters to ground system by suitable conductors. Where lightning arresters are furnished with electrical equipment and grounding connections are not inherently provided, ensure that suitable separate grounding conductor connects lightning arresters with system ground.

J. Connect generator neutral to grounding system by a grounding conductor. Connect grounding conductor to generator disconnect enclosure and generator neutral on generator side of disconnect. Ground generator frame with two separate independent connections, so removal of one connection will not impair continuity of other.

K. Ground each street lighting standard by ground rod driven near base of standard, in accordance with requirements of National Electric Safety Code. Connect ground rods to grounding conductor brought with street lighting feeder cable.

L. Ground transformers, lightning arresters, insulators and other appurtenances, installed on poles, poles and timber structures, or metal structure. Run grounding conductors between poles or structure and ground rods. Protect grounding conductor by molding applied for at least 8 feet (2500 mm) above ground, with both molding and conductor stapled. Install ground rod where indicated and driven until top of rod is 1 foot (300 mm) below ground.

M. Ground wire fences when used to enclose electrical equipment or when overhead electrical lines cross fence. Unless otherwise indicated, provide grounding by buried outside peripheral ground loop; connections to each corner fence post and nearby ground rod; flexible connections to each gate; and at least two connections to grounding system from approximately opposite positions on fence.

N. Connect individual ground rods to the grounding loop using the direct burial grounding cable.

O. Bond individual cable tray sections with bonding jumpers.

3.05 SIGNAL GROUNDING:

A. Ground signal surge protection and shields of twisted, shielded cable using a signal bonding conductor. The signal bonding conductor shall be a continuous path from the instrument surge protection or shield to the grounding electrode conductor. The signal bonding conductor shall be isolated from the equipment grounding conductor for its entire path.

B. Where convenient several signal bonding conductors may be conbined, providing that all the following conditions are met:

1. The combined signal bonding conductor shall have the equivalent cross section of the conductors that it was combined from or three times the cross section of the largest conductor that it was combined from, whichever is less.

2. The combined signal bonding conductor shall be isolated from the equipment grounding conductor.

3. Where two signal bonding conductors are combined use a three port insulated splice.

4. Where three or more signal bonding conductors are combined, use a copper bus mounted on 600 volt insulators. Attach each conductor to the bus using an insulated ring tongue lug and screw terminal.

3.06 COMMERCIAL GROUNDING:

A. Telephone:

1. Install one No. 2 insulated ground conductor to ground bus in telephone equipment cabinet.

2. Connect one No. 12 insulated ground conductor to all conduits terminating at backboard.

3.07 FIELD TESTING:

A. Test grounding systems for ground resistance. Total resistance from any point on the ground network to the building counterpoise must not exceed 50 milliohms.

B. Ground resistance and counterpoise tests must be made during dry weather and no sooner than 48 hours after rainfall. Conditions of soil and weather shall be documented on test forms.

C. Conduct tests using the ratio method that measures the ratio of the resistance to earth of an auxiliary test electrode to the series resistance of the electrode under test and a second auxiliary electrode. Perform measurements in accordance with IEEE Standard 81.

D. Indicating instrument must be self-contained and include a direct-current generator, synchronized current and potential reversers, crossed-current and potential coils, direct-reading ohmmeter, series resistors, and range-selector switch. Calibrate direct-reading ohmmeter for ranges of 0 to 20 ohms and 0 to 200 ohms.

E. Place auxiliary grounding electrodes in accordance with instrument manufacturer's recommendations but not less than 50 feet (15 m) apart, in accordance with IEEE Standard 81.

F. Perform continuity test on all power receptacles to ensure that the ground terminals are properly grounded to the facility ground system.

G. Furnish copies of test reports on ground system.

3.08 CONTRACT CLOSEOUT:

A. Provide in accordance with Section 01 77 00.

END OF SECTION

SECTION 26 05 29

HANGERS AND SUPPORTS FOR ELECTRICAL SYSTEMS

PART 1 - GENERAL

1.01 DESCRIPTION:

A. Provide supports from building structure for electrical items by means of hangers, supports, anchors, sleeves, inserts, seals, and associated fastenings as indicated and in compliance with Contract Documents.

1.02 REFERENCES:

A. ASTM International (ASTM):

1. A123/A123M: Standard Specification for Zinc (Hot-Dip Galvanized) Coatings on Iron and Steel Products.

2. A653/A653M: Standard Specification for Steel Sheet, Zinc-Coated (Galvanized) or Zinc-Iron Alloy-Coated (Galvannealed) by the Hot-Dip Process.

3. A924/A924M: Standard Specification for General Requirements for Steel Sheet, Metallic-Coated by the Hot-Dip Process.

4. E84: Standard Test Method for Surface Burning Characteristics of Building Materials.

5. E119: Standard Method for Fire Tests of Building Construction and Materials.

6. E814: Standard Test Method of Fire Tests of Through Penetration Firestops.

B. FM Global (FM):

1. Approval Guide, A Guide to Equipment, Materials & Services Approved By Factory Mutual Research For Property Conservation.

C. National Fire Protection Association (NFPA):

1. 70: National Electrical Code (NEC).

D. Underwriters Laboratories, (UL): Applicable listings.

1. FRD: Fire Resistance Directory.

2. 263: Fire Tests of Building Construction and Materials.

3. 723: Test for Surface Burning Characteristics of Building Materials.

4. 1479: Fire Tests of Through-Penetration Firestops.

1.03 SUBMITTALS:

A. Submit the following shop drawings in accordance with Section 01 33 00.

B. Submit shop drawings and manufacturers' product data in accordance with the requirements of Section 26 05 10.

PART 2 - PRODUCTS

2.01 MATERIALS:

A. Steel or malleable iron.

B. Aluminum where indicated.

C. Stainless steel where indicated.

2.02 COATINGS:

A. Protect steel and malleable iron supports, support hardware, and fasteners with zinc coating.

B. Provide products for use outdoors.

C. Use PVC coating where indicated on Drawings.

2.03 MANUFACTURED SUPPORTING DEVICES:

A. Raceway Supports: Clevis hangers, riser clamps, conduit straps, threaded C-clamps with retainers, ceiling trapeze hangers, wall brackets, and spring steel clamps.

B. Fasteners: Types, materials, and construction features as follows:

1. Expansion Anchors: Carbon steel wedge or sleeve type.

2. Toggle Bolts: All steel springhead type.

3. Powder-Driven Threaded Studs: Heat-treated steel, designed specifically for intended service.

4. Nuts, Washers, and Bolts: Stainless steel.

C. Conduit Sealing Bushings: Factory-fabricated watertight conduit sealing bushing assemblies suitable for sealing around conduit passing through concrete floors and walls. Construct seals with steel sleeve, malleable iron body, neoprene sealing grommets or rings, metal pressure rings, pressure clamps, and cap screws.

D. Cable Supports for Vertical Conduit: Factory-fabricated assembly consisting of threaded body and insulating wedging plug for nonarmored electrical cables in riser conduits. Provide plugs with number and size of conductor gripping holes as required to suit individual risers.

E. U-Channel Systems: Channels, with 9/16 inch (14 mm) diameter holes, at minimum of 8 inch (200 mm) on center, in top surface. Provide fittings and accessories that mate and match with U-channel and are of same manufacture.

2.04 U-CHANNEL SYSTEMS:

A. Manufacturers, Stainless Steel/Galvanized Steel Channel.

1. Unistrut Corp.

2. Power-Strut.

3. B-Line Systems, Inc.

B. Manufacturers, Fiberglass Channel.

1. Omnistrut, Champion Fiberglass.

2. Durostrut, Enduro Composite Systems.

3. Struttech, Entrum Industries.

C. Provide Type 316 stainless steel channel or fiberglass channel with corresponding accessories.

D. Channels, with 9/16 inch (14 mm) diameter holes, at minimum of 8 inch (200 mm) on center, in top surface.

E. Provide fittings and accessories that mate and match with U-channel and are of same manufacture.

F. Provide hot-dipped galvanized after fabrication for steel channel and accessories.

G. Provide channel of the proper material to match equipment classifications.

2.05 FIRE RESISTANT JOINT SEALERS:

A. Manufacturers:

1. “Dow Corning Fire Stop Foam,” Dow Corning Corp.

2. “Pensil 851,” General Electric Co.

B. Two part, foamed-in-place, silicone sealant formulated for use in through penetration fire stopping around cables, conduit, pipes, and duct penetrations through fire-rated walls and floors.

C. Sealants and accessories shall have fire-resistance ratings indicated, as established by testing identical assemblies in accordance with ASTM E814, by Underwriters' Laboratories, Inc., or other testing and inspection agency acceptable to authorities having jurisdiction.

PART 3 - EXECUTION

3.01 INSTALLATION:

A. Install supporting devices to fasten electrical components securely and permanently in accordance with NEC requirements.

B. Coordinate with structural system and with other electrical installation.

C. Raceway Supports: Comply with NEC and following requirements:

1. Conform to manufacturer's recommendations for selection and installation of supports.

2. Strength of each support shall be adequate to carry present and future load multiplied by safety factor of at least 4. Where this determination results in safety allowance of less than 200 lbs (890 N), provide additional strength until there is minimum of 200 lbs (890 N) safety allowance in strength of each support.

3. Install individual and multiple (trapeze) raceway hangers and riser clamps as necessary to support raceways. Provide U-bolts, clamps, attachments, and other hardware necessary for hanger assembly and for securing hanger rods and conduits.

4. Support parallel runs of horizontal raceways together on trapeze-type hangers.

5. Support individual horizontal raceways by separate pipe hangers. Spring steel fasteners may be used in lieu of hangers only for 1 inch (25 mm) and smaller raceways serving lighting and receptacle branch circuits above suspended ceilings only. For hanger rods with spring steel fasteners, use 1/4-inch (6 mm) diameter or larger threaded steel. Use spring steel fasteners that are specifically designed for supporting single conduits or tubing.

6. In vertical runs, arrange support so load produced by weight of raceway and enclosed conductors is carried entirely by conduit supports with no weight load on raceway terminals.

D. Vertical Conductor Supports: Install simultaneously with installation of conductors.

E. Sleeves: Install in concrete slabs and walls and other fire-rated floors and walls for raceways and cable installations. For sleeves through fire rated wall or floor construction, apply UL listed firestopping sealant in gaps between sleeves and enclosed conduits and cables.

F. Conduit Seals: Install seals for conduit penetrations of slabs below grade and exterior walls below grade and where indicated. Tighten sleeve seal screws until sealing grommets have expanded to form watertight seal.

G. Conduit extending through roof shall pass through ceiling box at roof line.

1. Provide 14 gage (1.9 mm) minimum copper box complete with watertight soldered seams and flanged to serve as pitch pocket for each conduit.

2. Install conduit and pitch pocket in advance of roofing work.

H. Fastening: Unless otherwise indicated, fasten electrical items and their supporting hardware securely to building structure, including but not limited to conduits, raceways, cables, cable trays, busways, cabinets, panelboards, transformers, boxes, disconnect switches, and control components in accordance with following:

1. Fasten by means of wood screws or screw type nails on wood, toggle bolts on hollow masonry units, concrete inserts or expansion bolts on concrete or solid masonry, and machine screws, welded threaded studs, or spring tension clamps on steel. Threaded studs driven by powder charge and provided with lock washers and nuts may be used instead of expansion bolts and machine or wood screws. Do not weld conduit, pipe straps, or items other than threaded studs to steel structures. In partitions of light steel construction, use sheet metal screws.

2. Holes cut in concrete shall not cut main reinforcing bars. Fill holes that are not used.

3. Load applied to any fastener shall not exceed 25 percent of proof test load. Use vibration and shock resistant fasteners for attachments to concrete slabs.

3.02 CHANNELS:

A. Support electrical components as required to produce same structural safety factors as specified for raceway supports.

B. Install metal U-channel racks for mounting cabinets, panelboards, disconnects, control enclosures, pull boxes, junction boxes, transformers, and other devices.

C. Install Type 316 stainless steel for mounting of electrical equipment in outdoor areas and on below grade, outside building and structure walls.

D. Install galvanized steel channels for interior building mounting of electrical equipment except for those locations listed above and unless otherwise indicated.

E. Install fiberglass channel in chemical areas with NEMA 4X enclosures.

3.03 CONTRACT CLOSEOUT:

A. Provide in accordance with Section 01 77 00.

END OF SECTION

SECTION 26 05 33

RACEWAY AND BOXES FOR ELECTRICAL SYSTEMS

PART 1 - GENERAL

1.01 DESCRIPTION:

A. Provide complete raceway systems, with matching accessories, fittings, boxes, and other hardware as indicated and in compliance with Contract Documents. When non-metallic raceway systems are specified, provide green insulated grounding conductor sized per National Electrical Code (NEC) requirements.

B. All raceway runs are indicated diagrammatically to outline general routing of raceway. Unless specifically identified for installation in concrete walls or slabs, raceways shall be run exposed with raceway supporting systems. Avoid interfering with pipes, ducts, structural members, or other equipment. Any installation deviations from the contract requirements shall be corrected at no cost to Owner.

C. Provide raceway systems in accordance with the following:

1. Within finished walls or ceilings, use EMT raceway systems.

2. In NEMA 12 or NEMA 1 areas, use IMC raceway systems.

3. In NEMA 4 areas, and where subject to wetting or wash down, use PVC coated rigid steel raceway systems.

4. In exterior building applications, use PVC coated rigid steel raceway systems.

5. In chemical areas and those areas designated NEMA 4X, use PVC coated rigid steel raceway systems.

6. In classified hazardous areas and areas designated NEMA 7, use PVC coated rigid steel with tapered threads and sealing fittings as required by the NEC for hazardous applications.

D. All raceway systems shall be installed in accordance with the criteria described in this section. Any proposed deviations from these requirements shall be submitted to the Engineer in writing for review and disposition.

1. Use Type 316 stainless steel support systems for exterior application and in NEMA 4 and NEMA 4X areas.

2. Use PVC coated support systems in NEMA 4X and chemical areas.

3. All NEMA 1 and NEMA 12 areas shall use hot dipped galvanized steel support systems.

E. Aluminum conduit and boxes are not acceptable products.

F. All raceways shall be supported to NEC requirements and to meet all applicable seismic criteria. Raceways 2 inch (50 mm) outside diameter or greater shall be independently supported in a manner to meet the criteria to resist failure during earthquake events. All hardware supports shall be specifically designed for the magnitude of the earthquake event as defined in Section 26 05 10.

1.02 REFERENCES:

B. National Electrical Manufacturers Association (NEMA):

1. RN-1: Polyvinylchloride (PVC) Externally Coated Galvanized Rigid Steel Conduit and Intermediate Metal Conduit

2. TC-2: Electrical Plastic Tubing (EPT) and Conduit (EPC-40 and EPC-80)

3. TC-3: Polyvinyl Chloride (PVC) Fittings for Use with Rigid PVC Conduit and Tubing

C. National Fire Protection Association (NFPA):

1. 70: National Electrical Code (NEC).

D. Occupational Safety & Health Act (OSHA).

1. Regulation 1910.7

E. Underwriter's Laboratories, Inc. (UL):

1. 1: Electrical Flexible Metal Conduit

2. 6: Rigid Metal Electrical Conduit

3. 94: UL Standard for Safety Tests for Flammability of Plastic Materials for Parts in Devices and Appliances

4. 360: Electrical Liquid-Tight Flexible Steel

5. 651: Schedule 40 and 80 PVC Conduit

6. 886: Electrical Outlet Boxes and Fittings for Use in Hazardous Locations, Class 1, Groups A, B, C, and D and Class 11, Groups E, F, and G

7. 1242: Intermediate Metal Conduit

8. 1684: UL Standard for Safety Reinforced Thermosetting Resin Conduit (RTRC) and Fittings

1.03 SUBMITTALS:

A. Submit the following shop drawings in accordance with Section 01 33 00:

B. Submit shop drawings and manufacturers' product data in accordance with the requirements of Section 26 05 10.

1.04 QUALITY ASSURANCE:

A. Provide in accordance with Section 01 43 00 and as specified.

B. Items provided under this section shall be listed and labeledby UL or other Nationally Recognized Testing laboratory (NRTL).

1. Term “NRTL” shall be as defined in OSHA Regulation 1910.7.

2. Terms “listed” and “labeled” shall be as defined in NFPA 70, National Electrical Code, Article 100.

C. Regulatory requirements:

1. National Electrical Code (NEC): Components and installation shall comply with National Fire Protection Association (NFPA) 70.

1.05 SEISMIC DESIGN REQUIREMENTS:

A. Conform to the requirements indicated on the structural drawings and as specified in Division 1.

B. It shall be the responsibility of manufacturer and supplier along with the Electrical Contractor to conform to the seismic design requirements for this project and for the work of this specification section.

C. Install supports for raceway systems greater than 2 inches (50 mm) in diameter to meet the seismic requirements indicated and specified.

PART 2 - PRODUCTS

2.01 MANUFACTURERS:

A. Rigid Metal Conduit, intermediate metal conduit and polyvinylchloride-coated rigid steel conduit.

1. Triangle/PWC, Inc.

2. Perma-Cote Industries.

3. Republic Steel Corporation.

4. Robroy Industries.

5. Allied Tube and Conduit.

B. Polyvinylchloride (PVC) Conduit:

1. Triangle/PWC, Inc.

2. Robroy Industries.

3. Carlon Electrical Sciences, Inc.

C. Rigid Non-Metallic (RNC) Conduit:

1. Champion Fiberglass, Inc.

2. FRE Composites Inc.

D. Flexible Conduit:

1. American Flexible Conduit Company.

2. Anamet, Inc.

3. Electri-Flex Company.

4. International Metal Hose Company.

E. Boxes and Fittings:

1. O.Z./Gedney Company.

2. Crouse-Hinds Electrical Construction Materials.

3. Appleton Electric Company.

F. Fiberglass-Reinforced Polyester Boxes:

1. Crouse-Hinds Electrical Construction Materials.

2. Fibox.

3. Hoffman Engineering Company.

4. Vynckier Enclosure Systems.

G. Support Systems:

1. Michigan Hanger Co., (O-Strut).

2. Thomas & Betts (Superstrut).

3. Unistrut Corp.

2.02 MATERIALS AND COMPONENTS:

A. Rigid Metal Conduit:

1. Provide galvanized rigid metal conduit, each with a coupling on one end and thread protector on other end.

2. Hot-dip galvanize rigid steel conduit over entire length, along interior and exterior surfaces, including threads. Conduit shall conform to UL 6.

B. Intermediate Metal Conduit:

1. Provide galvanized intermediate metal conduit, each with a coupling on one end and a thread protector on the other end.

2. Hot-dip galvanize intermediate metal conduit over entire length, along interior and exterior surfaces, including threads. Conduit shall conform to UL 1242.

C. Flexible-Metal Conduit:

1. Provide flexible-metal conduit for use in dry areas and match fittings, size, and material to rigid conduit to which it is connected. Flexible-metal conduit shall conform to UL 1.

2. Provide liquid-tight flexible-metal conduit for use in damp areas consisting of flexible-metal conduit, with liquid-tight, sunlight-resistant jacket extruded over the conduit. Provide stainless steel, braided flexible conduit in NEMA 4X, corrosive areas. On larger than 1-1/4 inch (30 mm), furnish separate external ground wire. Liquid-Tight flexible-metal conduit shall conform to UL 360.

D. Polyvinylchloride (PVC) Conduit:

1. Provide PVC conduit, Schedule 40 and Schedule 80 conforming to NEMA Standard TC-2 and UL-651.

2. Fittings and Conduit Bodies: NEMA TC 3 as recommended by the conduit manufacturer.

E. Polyvinylchloride-Coated Rigid Steel Conduit:

1. Provide polyvinylchloride-coated (PVC-Coated), rigid steel conduit conforming to NEMA Standard RN-1 consisting of hot-dipped galvanized rigid steel conduit, as specified hereinbefore, with a polyvinylchloride jacket bonded to the outside of all conduit surfaces with a nominal thickness of 40 mils meeting the requirements of NEMA RN-1, 3.1. The adhesive strength of the bonding to equal or exceed tensile

strength of the coating. Provide couplings and fittings for this conduit conforming to the requirements of NEMA RN-1, 3.5.

2. A two-part urethane coating shall be applied to the interior of all conduit and fittings at a two mil thickness. The interior coating shall be flexible to allow field bending without cracking or flaking.

F. Rigid Non-Metallic Conduit (RNC):

1. Product Description: Type RNC, Fiberglass Reinforced Plastic conduit.

2. Listing: UL 1684 and UL 94 HB.

3. Fittings and Conduit Bodies: As recommended by the conduit manufacturer, match conduit.

4. Supports: Fiberglass struts, pipe clamps, hangers, beam clamps, threaded rod, nuts, washers, and other support system components.

G. Boxes:

1. In NEMA and NEMA 12 areas, provide standard, sheet-metal, outlet and junction boxes constructed of code-gauge, galvanized sheet steel. Size each box as required by the NEC.

2. Provide boxes containing fixture studs for hanging fixtures. Use concrete-tight boxes for installation in concrete. Do not use shallow boxes unless building construction is such that it is impossible to use standard-depth boxes.

3. Provide outlet boxes and fittings for hazardous locations conforming to UL 886 for class, group, and division indicated.

4. Provide boxes and covers for polyvinylchloride-coated steel conduit made of galvanized cast iron, with a polyvinylchloride factory-applied coating over the galvanizing. Provide coating thickness of 40 mil (1.0 mm) minimum. Boxes shall have hubs with extruded sleeves extending beyond the hub in the same manner as specified for conduit couplings. Provide cover screws of stainless steel.

5. Provide cast boxes with covers or device plates suitable for the area classification. Use cover screws of stainless steel or high brass for iron boxes.

6. Provide polyvinylchloride boxes for use as junction boxes and provide high impact strength fiberglass-reinforced polyester boxes for use as device boxes, pull boxes, and terminal boxes for use with polyvinylchloride conduit. Size each box as required by the NEC.

7. Provide pull boxes below motor control center installations (20 inches (500 mm) by 20 inches (500 mm) by 12 inches (300 mm) deep minimum.) Boxes of

dimensions 10 inches (250 mm) by 10 inches (250 mm) by 6 inches (150 mm) deep and larger shall be hung from ceilings constructed of angle or channel frames, and shall be made of sheet metal with welded joints. All welds shall be ground smooth. Provide neoprene gaskets for complete sealing. Sectionalize covers longer than 36 inch (900 mm) to facilitate handling and gasket sectionalized covers where covers meet, using angle iron or channel cross members at the joint. Sheet metal shall be not less than No. 12-gage (0.1046 mm) galvanized sheet steel. Fabricate interior angles and supports of galvanized steel. Provide each box with a grounding lug for connection to the nearest ground bus. Current capacity of ground lug shall be at least that required by the NEC for the largest feeder entering the equipment.

H. Fittings:

1. Provide cast-iron fittings of malleable iron or a mixture of gray iron and cast steel.

2. Provide suitable expansion fittings where conduits cross expansion joints. Equip these fittings with grounding straps, clamps, and copper bonding jumpers.

PART 3 - EXECUTION

3.01 INSTALLATION:

A. Perform all work in accordance with the NEC.

B. Use no conduit less than 3/4-inch (20 mm) in diameter, unless otherwise indicated.

C. Install raceways, boxes, enclosures, and cabinets as indicated, according to manufacturer's printed instructions.

3.02 SEISMIC RESTRAINTS:

A. For conduits and other raceways installed in open areas, not adjacent to and secured to structural elements, and 2 inch (50 mm) outside diameter or greater, support such raceways using seismic restraints rated for the applicable project earthquake criteria.

B. Methods of Restraining Raceways:

1. Utilize threaded rod with rod stiffeners and transverse channel braces at approximately 45 degrees angle, at 15 feet (4.5 m) on center, maximum, and on one side of rod support.

2. Utilize longitudinal bracing with channel braces at 30 feet (9.1 m) on center, maximum.

3. Strap raceways directly to transverse channel braces, using pipe strap with both ends of strap bolted into the channel brace.

4. Do not rigidly brace raceways to different parts of a building that may respond differently during an earthquake. Seismic restraints shall not limit expansion and contraction of the raceway support system.

5. Provide flexible connections for conduits 2 inch (50 mm) outside diameter or greater than when terminating to fixed equipment to prevent loss of raceway integrity in the event of an earthquake.

3.03 INSTALLATION OF FITTINGS:

A. Install expansion fittings wherever conduits cross structural expansion joints. Keep the fittings in line with conduit, and install with regard to temperature so that full working range of expansion is available.

B. Do not install fittings to replace elbows and pull boxes, unless space or other problems make use of fittings necessary. Use oversize fittings whenever large cable is installed, in order to maintain proper bending radius.

C. Terminate ends of all floor conduits installed for future use with couplings and readily removable plugs set flush with finished floor surface. Cap spare wall conduits at wall where they enter building.

D. Equip ends of all conduits with conduit fittings. Fit conduits terminating at motor control center or power distribution equipment, or in box above or below, with grounding type bushings, or solidly ground by locknuts or other acceptable fittings. Connect each grounding bushing to ground bus by a bare or green-covered copper wire. Do not use ground wire smaller than 12 AWG. Install ground wire larger than 12 AWG when required by NEC. Where conduits terminate in unprotected areas or where bonding is required over expansion joint, flexible conduit or equivalent; use ground wires 6 AWG. copper or larger.

E. Terminate conduits entering gasketed sheet-metal boxes or gasketed sheet-metal equipment enclosures with gasketed hubs.

F. Terminate conduits entering nongasketed sheet-metal boxes or enclosures with double locknuts and insulated bushings, or with acceptable equivalent.

G. Join raceways with fittings listed for the purpose. Make joints tight. Use raceway fittings compatible with raceway and suitable for use and location. For intermediate steel conduit, use threaded rigid steel conduit fittings, except as otherwise indicated.

1. Make raceway terminations tight. Use bonding bushings or wedges at connections subject to vibration. Use bonding jumpers where joints cannot be made tight.

2. Use insulating bushings to protect conductors.

3. Tighten set screws of threadless fittings with suitable tool.

3.04 INSTALLATION OF RACEWAYS:

A. Install exposed raceways parallel or at right angles to walls and ceiling beams. Make all changes in directions with listed bends, elbows, and pull boxes. Space parallel runs uniformly throughout. Secure in place by hangers and fasteners. Ground raceways by connection to properly grounded enclosures, bonding, or other means, to obtain permanent low resistance path to ground throughout installation. Ensure that raceway sections in single run and in parallel runs are of same type and finish.

1. Run parallel or banked raceways together, on common supports where practical.

2. Install raceways level and square and at proper elevations. Provide minimum 7 feet (2 m) headroom.

B. Support raceways concealed above suspended ceilings from slab above ceiling in same manner as exposed raceways. Do not support raceways from ceiling supports.

C. Provide cast-in-place inserts in concrete to support all runs, unless otherwise permitted. Use stainless steel sleeve type concrete anchors for installing boxes, and conduit supports. Provide Type 316 stainless steel nut, bolts, and washers, for use with concrete anchors.

D. Support conduits by hangers or pipe straps spaced according to NEC, but in no case more than 10 feet (3 m) on centers.

E. Provide hot-dipped galvanized supports for galvanized conduit.

F. When specified on the Contract Drawings, install conduits in slabs as close to middle of concrete slabs as practicable without disturbing reinforcement. Do not use conduit with outside diameter exceeding one-third of slab thickness. Do not place conduits closer than three diameters on centers, except at cabinet locations where slab thickness is increased as permitted by CM.

G. Where conduits are concealed in bottom floor slab, place in concrete slab and not in fill below slab. Install in middle third of the slab thickness where practical, and leave at least 4 inches (100 mm) of concrete cover.

1. Secure raceways to reinforcing rods and to prevent sagging or shifting during concrete placement.

2. Space raceways laterally to prevent voids in the concrete.

3. Run conduit larger than 1-inch (25 mm) trade size parallel to or at right angles to main reinforcement. When at right angles to reinforcement, place conduit close to slab support.

H. Stub-Up Connections: Extend conduits through concrete floor for connection to freestanding equipment with an adjustable top or coupling threaded inside for plugs, and

set flush with the finished floor. Extend conductors to equipment with rigid steel conduit. Flexible metal conduit may be used 6 inches (150 mm) above the floor. Where equipment connections are not made under this Contract, terminate ends of floor conduits installed for future use with couplings and readily removable plugs 8 inch (250 mm) above finished floor surface. Cap spare wall conduits at wall entrance to building.

I. Provide sleeves passing through exterior walls and slabs which are wall entrance seals of watertight construction. For new construction, furnish watertight seal between slab and sleeve, and between sleeve and conduit or cable similar to O.Z./Gedney Type "FSK". For existing construction, furnish watertight seal for use in core bit drilled holes that provides seal between concrete and conduit or cable similar to O.Z./Gedney Type "CSM1". Use wall-entrance seals of malleable iron with watertight sealing gland which may be tightened any time after installation.

J. Do not use dissimilar metals in conjunction with each other. Use an insulation between adjoining surfaces so as to eliminate direct contact and any resultant electrolysis. Maintain electrical continuity of system. Use bituminous impregnated felt, heavy bituminous coatings, nonmetallic separators or washers, or other acceptable materials as insulation.

K. Install fittings to match raceway being used.

L. Install expansion fittings wherever conduits cross structural expansion joints at connections between buildings. Keep fittings in line with conduit, and install with regard to temperature so that full working range of expansion is available.

M. Where conduits pass through firewalls, grout hole around the conduit to the full depth of the material penetrated.

N. Provide separate raceways for all low voltage instrumentation raceways (50 volts and below) from control and power raceways.

O. Terminations: Where raceways are terminated with locknuts and bushings, align the raceway to enter squarely, and install the locknuts with dished part against the box; use two locknuts, one inside and one outside the box.

P. Where terminating in threaded hubs, screw the raceway or fitting tight into the hub so the end bears against the wire protection shoulder. Where chase nipples are used, align the raceway so the coupling is square to the box, and tighten the chase nipple so no threads are exposed.

Q. Install pull wires in all empty raceways. Use 14 AWG zinc-coated steel or monofilament plastic line having not less than 200 lb (890 N) tensile strength. Leave not less than 12 inches (300 mm) of slack at each end of the pull wire.

R. Keep raceways at least 6 inches (150 mm) away from parallel runs of flues and steam or hot water pipes. Install horizontal raceway runs above water and steam piping.

S. Complete raceway installation before beginning conductor installation.

T. Use temporary closures to prevent foreign matter from entering raceway.

U. Protect stub-ups from damage where conduits rise through floor slabs. Arrange so curved portion of bends is not visible above the finished slab.

V. Where metal conduits rise through floor slabs in wet areas, coat conduits for a distance of 6 inches (150 mm) above and below slab grade with brush coat of waterproof bituminous cementanti.

3.05 BENDS:

A. Make all bends carefully to prevent distortion of circular cross section. Field bend conduit shall have an inside radius of not less than nine diameters.

B. Where bends of less than nine diameters are necessary, use standard factory elbows. Size conduit to permit cable-bending radius within the factory elbow of at least eight times cable diameter.

C. Allow no conduit greater than 50 feet (15.2 meters) to have more than two 90 degree bends or equivalent thereof between pulling points. For conduits less than 50 feet (15.2 meters) in length, allow only three 90 degree bends between pulling points.

3.06 CUTTING, THREADING AND CONNECTING:

A. Make all field cuts in conduits squarely, file cut ends, ream to remove rough edges and thread in accordance with NEC. No running thread permitted. Make all connections mechanically strong and tight, and with acceptable connectors. Where conduit surface coating is damaged or removed in the cutting, threading or reaming process, restore the surface to its original condition.

3.07 CONDUIT CLEANING:

A. Clean all conduit carefully before and after installation, ream ends free of burrs, and free inside surfaces from all imperfections likely to injure cable.

B. After installation of each complete new conduit run, snake the run with band to which is attached a tube cleaner with cylindrical mandrel of a diameter not less than 85 percent of nominal diameter of conduit. Remove and replace all conduit through which mandrel will not pass.

C. Use a sponge with steel brush to clean steel conduit and use a sponge with nylon brush to clean PVC conduits.

D. After cleaning, protect ends of all conduit with standard caps to prevent entrance of water, concrete, debris, or other foreign substance.

3.08 CONDUIT DRAINAGE:

A. Where practicable, pitch conduit to drain to outlet boxes, or install so as to avoid trapping moisture. Where dips are unavoidable in exposed conduits, install fitting with drain hole at low point.

3.09 INSTALLATION OF BOXES:

A. Unless otherwise indicated, install sheet metal boxes only in dry, accessible locations. Install cast-metal boxes in exterior concrete or masonry walls, in floor slabs, in basements, all other below grade locations and elsewhere as indicated. Cast metal boxes shall be used (unless otherwise indicated) where vapor-tight fixtures are required, for all surface mounting of wall switches and receptacles and for all outdoor use. Install pull boxes for motor control centers and large ceiling hung boxes where indicated.

B. Install boxes in conformance with all the requirements of NEC. Install boxes designed for type of construction involved. Support boxes in same manner as required for conduit. Size boxes to provide bending radius for wire or cable of at least eight times diameter or in accordance with NEC, whichever is larger.

C. Center all outlets in panels, or spaces and adjust to structural finish. Where specific locations are not indicated, locate outlets with respect to equipment served.

D. Place all outlet boxes, junction boxes and pull boxes, in accessible locations when they are installed above or behind plastered ceilings, furred spaces, or suspended ceilings. Install access panels of suitable size. Mark all access panels for all boxes so panels can be readily located in future. Mark, using metal tabs or plastic buttons which cannot mark ceilings or walls, appropriate for type of construction being used.

E. Assemble cast-metal boxes with threaded conduit hubs in such manner that conduit connections and gasketed covers are watertight. Close all unused threaded openings with pipe plugs and compound.

F. Provide cast boxes with covers and device plates suitable for the area classification. Install screws of stainless steel or high brass for iron boxes.

3.10 FLEXIBLE CONNECTIONS TO MOTORS AND EQUIPMENT:

A. At all motors and electrically operated equipment to which conduit connections are made, install with a complete connection between end of conduit and terminal box of motor or other equipment.

B. Install the conduits in locations permitting direct connection to motors.

C. Make connections between rigid raceway and motor or equipment subject to vibration and adjustment using flexible conduit. Make each connection with at least one quarter bend so that no vibration can be transmitted beyond flexible connection.

D. Install flexible metal conduit, fittings, and accessories in dry areas in accordance with requirements of NEC.

E. Install liquid-tight flexible metal conduit in damp and corrosive areas. Locate conduit to reduce the possibility of damage to the exterior coating. Use fittings that screw into flexible conduit and provide gaskets.

F. Use maximum of 6 feet (2 m) of flexible conduit for recessed and semirecessed lighting fixtures and; for equipment subject to vibration, noise transmission, or movement; and for all motors. Use liquid tight flexible conduit in wet or damp locations. Install liquid-tight flexible metal conduit in areas subject to wetting due to fire protection sprinklers or broken or ruptured water line. Locate conduit to reduce the possibility of damage to the exterior flexible conduit jacket. Use fittings that screw into flexible conduit and provide gaskets. Install separate ground conductor across flexible connections.

3.11 HAZARDOUS AREAS:

A. Install all conduits, fittings, equipment and devices within areas to comply with requirements of NEC for Hazardous Locations, Class, Division, and Group as indicated on the drawings.

B. In such hazardous locations, seal conduits terminating at boxes enclosing circuit-opening equipment at entrance to enclosure with compound-filled, commercial, sealing fittings to prevent passage of explosive or combustible gases through conduits.

C. Seal all conduits leading from or entering such hazardous locations at points of exit or entrance with two-part epoxy sealant.

D. Install conduit connections with at least five threads tightly engaged, and made up with suitable thread compound.

E. Where drain/seal fittings are required, they shall be of malleable iron construction with an internal drainage path which provides a visual means to ensure that the compound chamber is properly filled. The installation shall enable the drain/breather fitting and filler plug to be installed right after the compound is poured.

3.12 PROTECTION:

A. Provide protection and install in accordance with manufacturer printed instructions. The conduit and raceway equipment manufacturers, to ensure that coatings, finishes, and enclosures are without damage or deterioration at completion of project.

1. Repair damage to galvanized finishes with zinc-rich paint recommended by manufacturer.

2. Repair damage to PVC or paint finishes with matching touch-up coating recommended by the manufacturer.

3.13 FINAL SYSTEM ACCEPTANCE:

A. Upon completion of installation of system, including outlet fittings and devices, inspect exposed finish. Remove burrs, dirt, and construction debris and repair damaged finish, including chips, scratches, and abrasions and at no additional cost to the Owner.

B. Label all raceways and boxes in accordance with the requirements of Section 26 05 10.

3.14 CONTRACT CLOSEOUT:

A. Provide in accordance with Section 01 77 00.

END OF SECTION

SECTION 26 05 53

ELECTRICAL IDENTIFICATION

PART 1 - GENERAL

1.01 SUMMARY:

A. Section Includes:

1. Identification of electrical materials, equipment, and installations as indicated and in compliance with Contract Documents.

1.02 REFERENCES

A. American Society of Mechanical Engineers (ASME):

1. A13.1: Scheme for the Identification of Piping Systems

B. Institute of Electrical and Electronics Engineers (IEEE):

1. ANSI/IEEE C2: National Electrical Safety Code.

C. National Fire Protection Association (NFPA):

1. 70: National Electrical Code (NEC).

1.03 SUBMITTALS:

A. Submit the following shop drawings in accordance with Section 01 33 00.

1. Submit shop drawings and manufacturers' product data in accordance with the requirements of Section 26 05 10.

B. Product Data:

C. Submit for each type of product specified.

D. Samples: Submit for each color, lettering style, and or graphic representation required for identification materials; samples of labels and signs.

E. Miscellaneous: Schedule of identification nomenclature to be used for identification signs and labels.

1.04 QUALITY ASSURANCE:

A. Comply with the requirements specified in Section 01 40 00.

PART 2 - PRODUCTS

2.01 RACEWAY AND CABLE LABELS:

A. Manufacturer's Standard Products: Where more than one type is listed for specified application, selection is Installer's option, but provide single type for each application category. Use colors prescribed by ASME A13.1, NFPA 70, or as specified elsewhere.

B. Components and installation shall comply with NFPA 70.

C. Conform to ASME A13.1, Table 3, for minimum size of letters for legend and minimum length of color field for each raceway or cable size.

1. Color: Black legend on orange field.

2. Legend: Indicates voltage.

D. Adhesive Labels: Preprinted, flexible, self adhesive vinyl. Legend is over-laminated with clear, wear and chemical resistant coating.

E. Pre-tensioned, Wraparound Plastic Sleeves: Flexible, preprinted, color coded, acrylic bands sized to suit diameter of line it identifies and arranged to stay in place by pre-tensioned gripping action when placed in position.

F. Colored Adhesive Tape: Self adhesive vinyl tape not less than 3 mils thick by 1 to 2 inch wide (0.08 mm thick by 25 to 51 mm wide).

G. Underground Line Warning Tape: Permanent, bright colored, continuous printed, vinyl tape with following features:

1. Size: Not less than 6 inch wide by 4 mils thick (152 mm wide by 0.102 mm thick).

2. Compounded for permanent direct burial service.

3. Embedded continuous metallic strip or core.

4. Printed Legend: Indicates type of underground line.

H. Tape Markers: Vinyl or vinyl cloth, self adhesive, wraparound type with preprinted numbers and letters.

I. Aluminum, Wraparound Marker Bands: Bands cut from 0.014 inch (0.4 mm) thick aluminum sheet, with stamped or embossed legend, and fitted with slots or ears for permanently securing around wire or cable jacket or around groups of conductors.

J. Plasticized Card Stock Tags: Vinyl cloth with preprinted and field printed legends. Orange background, except as otherwise indicated, with eyelet for fastener.

K. Aluminum Faced Card Stock Tags: Wear resistant, 18 point minimum card stock faced on both sides with embossable aluminum sheet, 0.002 inch (0.05 mm) thick, laminated with moisture resistant acrylic adhesive, and punched for fastener. Preprinted legends suit each application.

L. Brass or Aluminum Tags: Metal tags with stamped legend, punched for fastener. Dimensions: 2 by 2 inch (51 by 51 mm) by 0.05 inch (1.3 mm).

M. Comply with IEEE C2.

2.02 ENGRAVED NAMEPLATES AND SIGNS:

A. Manufacturer's Standard Products: Where more than one type is listed for specified application, selection is Installer's option, but provide single type for each application category. Use colors prescribed by ASME A13.1, NFPA 70, or as specified elsewhere.

B. Engraving stock, melamine plastic laminate, 1/16-inch (1.6 mm) minimum thick for signs up to 20 square inches (129 sq cm), 1/8 inch (3.2 mm) thick for larger sizes.

1. Engraved Legend: Black letters on white face.

2. Punched for mechanical fasteners.

C. Baked Enamel Signs for Interior Use: Preprinted aluminum signs, punched for fasteners, with colors, legend, and size as indicated or as otherwise required for application. 1/4 inch (6.4 mm) grommets in corners for mounting.

D. Exterior, Metal Backed, Butyrate Signs: Wear resistant, non-fading, preprinted, cellulose acetate butyrate signs with 0.0396 inch (1 mm), galvanized steel backing, with colors, legend, and size appropriate to application. 1/4-inch (6.4 mm) grommets in corners for mounting.

E. Fasteners for Plastic Laminated and Metal Signs: Self tapping stainless steel screws or No. 10/32 stainless steel machine screws with nuts, flat washers and lock washers.

2.03 MISCELLANEOUS IDENTIFICATION PRODUCTS:

A. Cable Ties: Fungus-inert, self extinguishing, 1 piece, self locking, Type 6/6 nylon cable ties with following features:

1. Minimum Width: 3/16-inch (5 mm).

2. Tensile Strength: 50 lb (222 N) minimum.

3. Temperature Range: -40 to 185 degrees F (-40 to 85 degrees C).

4. Color: As indicated where used for color coding.

B. Paint: Alkyd-urethane enamel. Primer as recommended by enamel manufacturer.

PART 3 - EXECUTION

3.01 INSTALLATION:

A. Install identification devices according to manufacturer's written instructions.

B. Install labels where indicated and at locations for best convenience of viewing without interference with operation and maintenance of equipment.

C. Lettering, Colors, and Graphics: Coordinate names, abbreviations, colors, and or designations used for electrical identification with corresponding designations used in Contract Documents or required by codes and standards. Use consistent designations throughout Project.

D. Sequence of Work: Where identification is to be applied to surfaces that require finish, install identification after completion of finish work.

E. Self Adhesive Identification Products: Clean surfaces of dust, loose material, and oily films before applying.

F. Identify feeders over 600 Volt with "DANGER-HIGH VOLTAGE" in black letters 2 inch (51 mm) high, stenciled with paint at 10 feet (3 m) intervals over continuous, painted orange background. Identify following:

1. Entire floor area directly above conduits running beneath and within 12 inch (305 mm) of basement or ground floor that is in contact with earth or is framed above unexcavated space.

2. Wall surfaces directly external to conduits concealed within wall.

3. All accessible surfaces of concrete envelope around conduits in vertical shafts, exposed in building, or concealed above suspended ceilings.

4. Surface of exposed conduits.

G. Install painted identification as follows:

1. Clean surfaces of dust, loose material, and oily films before painting.

2. Prime Surfaces: For galvanized metal, use single component, acrylic vehicle coating formulated for galvanized surfaces. For concrete masonry units, use heavy duty, acrylic resin block filler. For concrete surfaces, use clear, alkali resistant, alkyd binder type sealer.

3. Apply 1 intermediate and 1 finish coat of silicone alkyd enamel.

4. Apply primer and finish materials according to manufacturer's instructions.

H. Identify Raceways and Exposed Cables of Certain Systems with Color Banding: Band exposed and accessible raceways of systems listed below for identification.

1. Bands: Pre-tensioned, snap around, colored plastic sleeves; colored adhesive tape; or combination of both. Make each color band 2 inch (51 mm) wide, completely encircling conduit, and place adjacent bands of 2 color markings in contact, side by side.

a. Fire Suppression Supervisory and Control System: Red and yellow.

b. Combined Fire Alarm and Security System: Red and blue.

c. Security System: Blue and yellow.

d. Mechanical and Electrical Supervisory System: Green and blue.

e. Telecommunications System: Green and yellow.

I. Install Caution Signs for Enclosures Over 600 Volt: Use pressure sensitive, self-adhesive label indicating system voltage in black, preprinted on orange field. Install on exterior of door or cover.

J. Install Circuit Identification Labels on Boxes: Label externally as follows:

1. Exposed Boxes: Pressure sensitive, self adhesive plastic label on cover.

2. Concealed Boxes: Plasticized card stock tags.

3. Labeling Legend: Permanent, water proof listing of panel and circuit number or equivalent.

K. Identify Paths of Underground Electrical Lines: During trench backfilling, for exterior underground power, control, signal, and communications lines, install continuous underground plastic line marker located directly above line at 6 to 8 inch (150 to 200 mm) below finished grade. Where multiple lines installed in common trench or concrete envelope do not exceed an overall width of 16 inch (400 mm), use single line marker.

1. Install line marker for underground wiring, both direct buried and in raceway.

L. Color Code Conductors: Secondary service, feeder, and branch circuit conductors throughout secondary electrical system.

1. Field applied, color coding methods may be used in lieu of factory coded wire for sizes larger than 10 AWG.

a. Colored, pressure sensitive plastic tape in half lapped turns for distance of 6 inch (150 mm) from terminal points and in boxes where splices or taps are made. Apply last 2 turns of tape with no tension to prevent possible

unwinding. Use 1 inch (25 mm) wide tape in colors as specified. Adjust tape bands to avoid obscuring cable identification markings.

b. Colored cable ties applied in groups of 3 ties of specified color to each wire at each terminal or splice point starting 3 inch (76 mm) from terminal and spaced 3 inch (76 mm) apart. Apply with special tool or pliers, tighten to snug fit, and cut off excess length.

2. 208/120 Volt System: As follows:

a. Phase A: Black.

b. Phase B: Red.

c. Phase C: Blue.

d. Neutral: White.

e. Ground: Green.

3. 480/277 Volt - System: As follows:

a. Phase A: Brown.

b. Phase B: Orange.

c. Phase C: Yellow.

d. Neutral: White.

e. Ground: Green.

M. Power Circuit Identification: Use metal tags or aluminum wraparound marker bands for cables, feeders, and power circuits in vaults, pull boxes, junction boxes, manholes, and switchboard rooms.

1. Legend: 1/4-inch (6.4 mm) steel letter and number stamping or embossing with legend corresponding to indicated circuit designations.

2. Fasten tags with nylon cable ties; fasten bands using integral ears.

N. Apply identification to conductors as follows:

1. Conductors to Be Extended in Future: Indicate source and circuit numbers.

2. Multiple Power or Lighting Circuits in Same Enclosure: Identify each conductor with source, voltage, circuit number, and phase. Use color coding for voltage and phase indication of secondary circuit.

3. Multiple Control and Communications Circuits in Same Enclosure: Identify each conductor by its system and circuit designation. Use consistent system of tags, color coding, or cable marking tape.

O. Apply warning, caution, and instruction signs and stencils as follows:

1. Install warning, caution, and instruction signs where indicated or required to ensure safe operation and maintenance of electrical systems and of items to which they connect. Install engraved, plastic laminated instruction signs with accepted legend where instructions or explanations are needed for system or equipment operation. Install butyrate signs with metal backing for outdoor items.

2. Emergency Operating Signs: Install engraved laminate signs with white legend on red background with minimum 3/8-inch (9 mm) high lettering for emergency instructions on power transfer, load shedding, and or emergency operations.

P. Install identification as follows:

1. Apply equipment identification labels of engraved plastic laminate on each major unit of equipment, including central or master unit of each system. This includes communication, signal, and alarm systems, unless units are specified with their own self-explanatory identification. Except as otherwise indicated, provide single line of text with 1/2-inch (13 mm) high lettering on 1-1/2 inch (38 mm) high label; where 2 lines of text are required, use lettering 2 inch (51 mm) high. Use black lettering on white field. Apply labels for each unit of following categories of equipment.

a. Panelboards, electrical cabinets, and enclosures.

b. Access doors and panels for concealed electrical items.

c. Electrical switchgear and switchboards.

d. Electrical substations.

e. Push button stations.

f. Contactors.

g. Remote controlled switches.

h. Dimmers.

i. Control devices.

j. Transformers.

k. Inverters.

2. Apply designation labels of engraved plastic laminate for disconnect switches, breakers, push buttons, pilot lights, motor control centers, and similar items for power distribution and control components above, except panelboards and alarm/signal components where labeling is specified elsewhere. For panelboards, provide framed, typed circuit schedules with explicit description and identification of items controlled by each individual breaker.

3.02 CONTRACT CLOSEOUT:

A. Provide in accordance with Section 01 77 00.

END OF SECTION

SECTION 26 08 13

FIELD INSPECTION AND ACCEPTANCE TESTS

PART 1 - GENERAL

1.01 DESCRIPTION:

A. Perform electrical system tests to demonstrate that each component of each system is in proper working order and in accordance with applicable codes, manufacturer's instructions, drawings and specifications as indicated and in compliance with Contract Documents. Tests are in addition to, and no substitution for, factory tests of individual equipment.

1. Perform insulation and ground resistance tests before operating tests.

2. Determine proper rotation of motors before permanent connections are made.

B. Testing shall be performed to:

1. Provide initial acceptance tests and recorded data that can be used as a benchmark for future routine maintenance and troubleshooting by facility operating staff.

2. Ensure a successful start-up with a minimum of last-minute interruptions and problems.

3. Determine the suitability of the equipment and systems for energization and placing into operating service.

4. Provide assurance that each system component is not only installed satisfactorily but performs, and will continue to perform, its function in the system with reasonable reliability throughout the life of the facility.

C. Provide all supervision and labor, materials, tools, test instruments or other equipment or services and expenses required to test, adjust, set, calibrate, functionally and operationally check all work and components of the various electrical systems and circuitry throughout the installation. Provide sufficient personnel to assist in any additional checks they may require for acceptance, start-up, run-in and placing the equipment and systems into continuous service.

D. The Contractor shall engage the services of a competent nationally recognized independent electrical equipment testing to perform specified field inspections, tests, and adjustments firm. The testing firm shall not be a subsidiary, division, nor department of either the installing Contractor or the manufacturer of the equipment materials or systems being inspected and tested. The testing firm shall be a fully accredited member of the International Electrical Testing Association, Incorporated (NETA) and have the

specialized experience and skill in the supervision and performance of all inspection and testing specified herein.

E. The testing firm shall perform the specified activities prior to the start-up and completion of the work identified in the Contract Documents.

F. The tests and inspections performed shall in no way relieve the Contractor of the responsibility for the performance of the tests, check outs, and inspections specified under other sections of the specification during construction.

G. The listings and descriptions of the tests, and checks described herein shall not be considered as complete and all inclusive. Additional normal standard construction (and sometimes repetitive) checks and tests may be necessary throughout the job, prior to final acceptance by the Owner.

H. Pay all costs for tests including expenses incident to retests occasioned by defects and failures of equipment to meet specifications.

1. Replace wiring and equipment found defective, or failing to meet specified requirements, without charge, unless written acceptance for repair is given by CM.

2. Unless otherwise specified, the Owner will supply electric power necessary for tests.

1.02 REFERENCES:

A. All inspections and tests shall be in accordance with the following applicable codes and standards latest revisions except as provided otherwise herein.

1. All Standard, Special and Supplemental Conditions of the Contract.

2. Association of Edison Illuminating Companies (AEIC).

3. American National Standards Institute (ANSI):

a. Z244-1: American National Standard for Personnel Protection

4. ASTM International (ASTM).

5. Insulated Cable Engineers Association (ICEA).

6. Institute of Electrical and Electronic Engineers (IEEE).

a. C2: National Electrical Safety Code

7. National Electrical Manufacturer's Association (NEMA).

8. International Electrical Testing Association (NETA):

a. ATS: Acceptance Testing Specifications for Electrical Power Distribution Equipment and Systems.

9. National Fire Protection Association (NFPA):

a. 70: National Electrical Code

b. 70B: Electrical Equipment Maintenance

c. 70E: Electrical Safety Requirements for Employer Workplaces

d. 101: Life Safety Code

11. Occupational Safety and Health Administration (OSHA):

a. Part 1926; Subpart V, 1926.950 through 1926.960

12. State and Local Codes and Ordinances.

B. All inspections and tests shall utilize the following references:

1. Project Design Specifications

2. Project Design Drawings

3. Project Electrical System Studies

4. Manufacturer's instruction manuals applicable to each particular apparatus

1.03 SUBMITTALS:

A. Submit the following shop drawings in accordance with Section 01 33 00.

1. Submit test plans and test data in accordance with the requirements of Section 26 05 10.

2. Submit evidence of NETA membership, experience and staff qualifications of the independent testing firm.

3. Submit in 3-ring notebook, test plans for each system and piece of equipment to be inspected and tested. Provide sample test data sheets with blanks identified where test data will be recorded, test instrument identification, calibration date, and blanks provided to identify the person performing the test and the person witnessing the test.

4. Submit test results.

1.04 SCHEDULING:

A. The Contractor shall be responsible for the preparation of proposed procedures and schedules for all inspections, tests, settings and calibrations specified or otherwise required prior to or during the check out for start-up and acceptance of all the electrical components, equipment and systems. This work shall be coordinated and to be compatible with both the work of other crafts and the project schedule. The above must be organized and submitted with all proposed testing and check out forms. The procedures shall provide specific instructions for the checking and testing of each component in addition to the system functional checks. Tests and inspections shall be scheduled as the job progresses and may require repetition in grater detail at a later stage of construction. All procedures submitted shall include job safety rules proposed.

B. Equipment shall be inspected and tested to determine its condition. See other applicable sections of the specifications and contract documents for required checks and responsibilities.

C. At any stage of construction and when observed, any electrical equipment or system determined to be damaged, faulty, or requiring repairs shall be reported to the Engineer. Corrective action may require prior approval.

D. Prior to check out and testing for start-up, ensure that all equipment and wiring is properly and permanently identified with nameplates and other identification as specified elsewhere. Check and tighten all terminals and connection points, remove all shipping blocks and hardware, thoroughly clean all equipment, repair all damaged or scratched finishes, inspect for broken and missing parts and review and collect manufacturer's drawings and instructions for submittal to the Engineer. Make routine checks and tests as the job progresses and as necessary to ensure that all wiring and equipment is properly installed and wired.

E. All testing and checkout work shall be performed with fully qualified personnel skilled in the particular tests being conducted. This is essential for obtaining and properly evaluating data while the tests are in progress and for insuring that important facts and questionable data are reported.

F. All inspections, tests, and calibrations shall be reported in writing on forms submitted for review under Submittals. The recorded data form shall have the signatures of the persons conducting the tests and authorized witnesses. The forms shall be designed to serve as the test and inspection checklist for inspection requirements. "As-found" and "as-left" test data shall be recorded and reported in writing.

G. The sequence of all tests and checks shall be such that the equipment can be energized immediately after the completion of the applicable tests.

H. When applicable electrical tests and inspections specified herein, or otherwise required are completed and results reported and reviewed then the Contractor may consider that portion of the electrical equipment system or installation electrically complete. The Contractor shall then affix appropriate dated completion or calibration labels to the

tested equipment. The Contractor shall notify the Engineer and Owner of electrical completion. If the Engineer or Owner finds completed work unacceptable, the Contractor will be notified in writing of the unfinished or deficient work which shall be corrected by the Contractor. The Contractor shall notify the Engineer in writing when all exceptions have been corrected. If later in-service operation or further testing determines problems attributable to the Contractor, these shall be corrected by the Contractor or suitable arrangements shall be made to suit operating circumstances.

PART 2 - PRODUCTS

2.01 TESTING EQUIPMENT:

A. Calibration:

1. Furnish all material, test equipment, and power sources required for testing, calibrating and check out. All calibration and setting checks by the independent testing laboratory shall be performed with laboratory calibrated test instruments of appropriate accuracy. This test equipment shall have calibrations traceable to the National Bureau of Standards. Testing laboratory dated calibration labels shall be visible on all test equipment. Calibrations over 6 months old will not be acceptable on field test instruments. The accuracy of all test instruments shall be at least twice that of the accuracy of the equipment, device, relay or meter under test. All testing instruments shall be checked to insure satisfactory operation prior to proceeding with the tests. Serial and model numbers of the instruments used shall be recorded on the test forms.

2. Make necessary openings in circuits for testing instruments and place and connect all instruments, equipment, and devices, necessary for the tests. Upon completion of tests, remove instruments and instrument connections and restore all circuits to permanent condition.

2.02 TESTING:

A. Coordination:

1. Coordinate activities, and cooperate with others on project, to ensure that systems are energized when required, loads applied, and other requirements of Section are carried out on timely, coordinated basis.

2. Conduct tests in presence of CM. Notify CM seven calendar days or more in advance when any test to be performed, and do not start tests without CM's permission.

3. Other Sections of specifications require services of one or more manufacturer's representatives, to ensure that equipment supplied has been installed properly and adjusted to proper working order. Advise representative of all applicable tests in this Section, so that work will be coordinated, and tests combined where feasible.

4. It is important that equipment warranties or guarantees not be voided by testing and checkout work. The checks and tests to normally be supplemental to and compatible with the manufacturer's installation instruction leaflets and literature. Where deviations are apparent, the manufacturer's review shall be obtained prior to testing. Reasonable cooperation shall be extended to permit witnessing by the manufacturer's representative if so requested. Where any questionable repairs, modifications, significant adjustments, tests or checks are to be made, the Contractor shall contact the CM to determine if the work should be performed by or with the manufacturer's representative.

B. Preparation:

1. Make up no high and/or medium-voltage connections at service entrance, transformers, substations, motors, medium voltage motor control centers, switchgear and generator permanently until correct phase rotation of all equipment is determined. Install and insulate these connections temporarily, if necessary, while determining proper rotation. Make permanent connections after proper rotation has been established and subsequent to completion of insulation resistance and dielectric tests.

PART 3 - EXECUTION

3.01 INSULATION TESTS OF EQUIPMENT, CABLE, AND CIRCUITS:

A. General:

1. Perform DC insulation tests of the type specified on electrical equipment, apparatus and cables under any one or more of the conditions described as follows: At the time equipment such as motors, generators, transformers, power circuit breakers and switches, switchgear, motor control centers, bus duct, and similar electrical equipment is :

a. Delivered to the site for care, storage, and/or installation,

b. Prior to energization and/or placing into service and acceptance by the Owner,

c. When damage to the insulation is suspected or known to exist,

d. After repairs or modifications to the equipment affecting the insulation,

e. Routinely as necessary to determine or evaluate the condition of the insulation, especially moisture conditions, to determine the need for drying, cleaning or other maintenance work or protection,

f. Where lightning or other surge conditions are known to have existed on the circuit.

2. Insulation tests are required to be performed by the testing firm at various stages of construction. The equipment, cable and systems that require testing, the maximum test voltages, and the type tests required shall be in accordance with the applicable paragraphs of NETA.

3. List each circuit and measured resistance as test data.

4. Maintain record of all insulation resistance values. Identify conductor, or equipment, date that value was taken and resistance value. Arrange information in suitable neat tabular form and submit to Engineer.

3.02 SPECIFIC TESTS AND INSPECTIONS BY THE CONTRACTOR:

A. General:

1. The following specific items of work shall be performed by the Contractor. The list is not all inclusive, nor does it define how the tests and checks are to be made. Refer to applicable sections of NETA and equipment specifications for additional details. The equipment and cable shall be deenergized and isolated as necessary to perform the tests.

2. The engagement of the independent testing firm in no way relieves the Contractor of the responsibility for, or diminishes the importance of, performance tests, checkouts, and inspections during the various stages of construction. The specific work of the independent test firm is defined in Paragraph 3.03.

3. The Contractor shall perform all tests and inspections as defined in the other sections of this specification. Tests and inspections required by these sections are not necessarily repeated under specific equipment in Paragraph 3.02

4. All equipment received for the job and for which the Contractor is responsible to be stored and cared for per the manufacturer's instructions. It is the Contractor's responsibility to obtain such information even where the instructions are not shipped with the equipment.

5. The Contractor shall assist the independent test laboratory in performing its work.

B. Equipment Test and Inspection During Construction and Prior to Acceptance Testing:

1. Motors (5 Hp and larger):

a. At the time of motor receipt, each motor shall be visually inspected for any physical damage and the motor meggered as described in Paragraph 1.e below.

b. All voltage motors shall be provided with adequate heating during storage. See Paragraph 3.01 for additional insulation tests for all motors of different voltages.

c. Before energizing any machine, visually inspect for serviceability. Check manufacturer's instruction manual for correct lubrication and ventilation. Verify that proper alignment has been performed. Check nameplate for electrical power requirements.

d. Test run all motors preferably uncoupled or unloaded, before placing into regular service. A check on the motor for rotation, speed, current and temperature rise to be made and results recorded. The proper color codes for phase identifications to be maintained. This may require lead swaps at the motor for proper rotation. A motor phase rotation meter shall be used prior to connection at motor to prevent later swaps.

e. Complete visual inspection and electrical test per NETA ATS. Section 7.15.1

2. Grounding Systems:

a. All grounding loops and major equipment grounds shall be tested to remote earth or directly referenced to an extremely low resistance (approximately 1 ohm) reference ground bench mark. Visual inspection of all systems, raceway and equipment grounds shall be made to determine the adequacy and integrity of the grounding. All ground testing results shall be properly recorded, witnessed, and submitted.

b. Ground tests shall be performed in accordance with NETA ATS, Section 8.13 using a J. G. Biddle Company low resistance, Null balance type, ground testing with ‘ohmmeter with test lead compensation in place. The test instrument shall be the type which compensates for potential and current rod resistances.

c. Test each ground rod and submit tabulation of results to Engineer. Include identification of electrode, date of reading and ground resistance value in results.

d. Test each entire grounding system for continuity of connections and for resistance. Ensure that ground resistance of conduits, equipment cases, and supporting frames does not vary appreciably from that of system as whole and does not exceed 5 Ohms.

e. Where ground test results indicate the need for additional grounding conductors or rods that are not indicated on drawings or specified, additional grounding provisions shall be initiated to obtain the acceptable values. The Contractor shall be responsible for the proper installation of the grounding shown on drawings or specified and for the correction of improper installations as determined by inspections and tests.

3. Low Voltage Switchgear: Refer to NETA ATS, Section 7.2. Perform all applicable tests and checks as described in NETA ATS, Section 7.2.

C. Distribution Transformers:

1. All 480 volt primary, air-cooled, transformers shall be given an insulation test, by means of a megger, after connections with the primary cables are complete. The supply cable shall be meggered with the primary winding and to the open air circuit breaker. Secondary leads may be meggered with the secondary windings to the open load breakers.

2. Continuity and correctness of connections of all windings, and ratings shall be checked.

3. Perform inspection checks, and electrical tests in accordance with NETA ATS Section 7.2.3.

D. Wire and Cable:

1. Before energizing, the continuity and insulation resistance of every circuit external to equipment shall be measured with a megger from each wire to all others and ground and test results recorded on forms. Tests shall normally be conducted at voltages 500 volts or lower. High potential testing will normally be performed by the independent testing laboratory as described in Paragraph 3.03.

2. Insulation resistance measurements shall be taken of the following: (Refer to Paragraph 3.01 for additional information.)

   a. Motor Feeders: With motors disconnected, measure and record insulation resistance from load side of contactors or circuit breakers. Repeat this test after motors are connected and just before energizing at lower voltage as limited by the maximum test voltage for the motor.

   b. Motor Control Circuits (600 Volts): With push buttons and overcurrent devices connected, measure and record insulation resistance from phase to ground only. It will be necessary to lift the neutral ground on the control transformers to perform this test. Also, isolate any control elements that should not be meggered.

   c. Lighting Panel Feeders: Measure and record insulation resistance with circuit breakers, lighting transformers and panelboards connected, but with lighting branch circuit breakers or switches open.

   d. Lighting Branch Circuits: Measure and record insulation resistance after all lampholders, receptacles, fixtures, etc., are connected but before lamping.

   e. Feeder Circuits: Measure and record insulation resistance with connections to circuit breakers made up but with breakers open and loads not connected.

3. All cables and wires shall be checked for proper identification numbering and/or color coding.

E. Overhead Conduit Systems:

1. The overhead conduit system shall be checked for proper installation by using the following check list: (This list not to be considered all inclusive but as a guide for inspection).

a. Conduits are supported on appropriate independent supports (i.e., not on process piping, pipe ways, or piping hangers).

b. Exposed conduits are run in a neat workmanlike manner, parallel or perpendicular to structural members.

c. Conduits are routed as far away from possible fire hazards and heat sources as practical.

d. Conduits are supported at the required intervals.

e. Pull boxes and fittings are installed so that covers are easily removable. Verify that all covers are installed and tightly bolted with gaskets provided where needed.

f. Number of bends in the conduit does not exceed 270 degrees without a pull box installed.

g. Circular cross sectional area is uniform at conduit bends. Single bends do not exceed 90 degrees.

h. Conduits are terminated in threaded hubs or bushings to prevent damage to wire.

i. Conduits joints have joint compound of the type specified and are tight and conduit ends are properly reamed and threaded not to engage less than 5 threads.

j. Pull fittings are of adequate size such that cable can be installed and replaced at a later date without the bending radius of the cable being less than code or manufacturer's requirements.

k. Seal fittings and/or sealing compound is installed at moisture barriers to prevent entry of moisture into equipment and/or where shown on plans.

l. Drains and conduit seals are installed on vertical conduit runs entering devices, equipment, and enclosures to prevent entrance of moisture.

m. Flexible conduit is installed at motors and other equipment as specified or required. Verify that all cabling and conduit runs are properly identified at each end.

F. Underground Conduit Systems:

1. Underground conduit systems shall be inspected and checked for compliance with standard practices, plans and specifications as the job progresses.

2. Upon construction completion of the underground conduit banks or runs and prior to backfill, the routing and the elevation and depth below grade shall be checked and any deviations from plans and/or specification to be recorded and in addition noted on record drawings.

G. Relay Panels, Operator and Instrument Control Panels, Communications Systems, Static Equipment, Programmable Controllers, Micro-Processors, Battery Systems and Other Miscellaneous Equipment:

1. Upon receipt of equipment, each item shall be inspected for damage, loose or missing parts.

2. Upon completion of equipment installation, all equipment and their control devices shall be visually and functionally tested for tightness of connections and for proper operation. In the case of battery systems, static inverters and the like, manufacturer's recommended test and installation manuals shall be reviewed and complied with. In the case of operator, instrument, and relay panels and cabinets or devices used solely for control, each circuit, where possible, shall be functionally tested for proper operation and conformance with drawings. Where functional testing is deemed undesirable by the Owner's Representative from a safety or plant operational standpoint, then continuity and terminal connection verification checks will be adequate. The Contractor shall insure that instruments and associated components cannot be energized until instructed by the Owner's Representative. For functional, operational, and calibration checks of instrument loops, refer to the instrument installation specifications.

3. Panelboard electrical checks shall be as included in the Wire and Cable section of this specification, Paragraph 3.02.E. Panelboards to be checked for proper circuit identification on the door schedule.

H. Sealing of Openings: The Contractor shall inspect the entire job with the CM to insure that all openings are properly sealed as specified elsewhere.

I. Record Drawings: The Contractor shall maintain a master set or record drawings that shows changes and any other deviations from the base drawing. The markups shall be made as the changes are done. At the conclusions of the job, these master record drawings shall be complete and delivered to the Owner's Representative for forwarding to the design group.

3.03 SPECIFIC TESTS AND INSPECTIONS BY THE INDEPENDENT TESTING FIRM:

A. The following specific items of work shall be performed by the independent testing firm, (see Paragraph 1.01.D.) The list is not all inclusive, nor does it define how the tests and checks are to be made. It is merely to define the minimum and type of tests that are required. For additional and supplementary requirements, refer to paragraph 1.02.

B. Molded Case Breakers:

1. No testing or checks of molded case circuit breakers is required by the independent testing firm.

C. Thermographic (Infrared) Surveys:

1. After the equipment has been placed in service, infrared surveys shall be performed on all designated electrical system apparatus specified below. The survey shall be performed with all apparatus energized and under full or normal load conditions. The survey shall include all connections and joints. Access covers and doors shall be removed or opened from all apparatus for the purpose of the survey. The survey shall consist of an on-site inspection performed by competent field engineering personnel using portable, imaging-display infrared camera equipment to locate and recommend corrective measures for overheated electrical connections, splices, taps, conductors and other abnormally hot items of apparatus, or portions thereof, that are a part of the designated apparatus.

2. The infrared survey documentation shall include a survey summary as well as detailed inspection reports containing photographic records of significant problems found, problem cause(s), required corrective action(s) and recommendations as to how promptly corrective action(s) should be taken.

3. The infrared camera equipment used shall be of the fully portable, image display type with photographic camera attached unit, and be capable of measuring apparatus temperatures with an accuracy of plus or minus 0.25 degrees C. at 30 degree object temperature. The testing firm and its assigned field engineer shall be regularly engaged in this type of work, to have prior experience in the use of the infrared camera equipment for this kind of application and to also be experienced in the normal inspection and test, of the electrical apparatus to be surveyed.

3.04 LOSS OF AC POWER TEST:

A. After the satisfactory completion of all electrical system testing, perform a loss of AC power test. The main circuit breaker at the facility shall be placed in the “OPEN” position by the Contractor using all required safety and personal protective equipment in accordance with NFPA 70E.

B. During this test the representatives from the following organizations shall be present:

1. Contractor

2. Division 40 SCADA System Supplier

3. CM

C. The test shall verify that all electrical equipment in the system can withstand the loss of utility AC power. Under standby generator power, all automatically started equipment shall be witnessed to start and accept load without tripping offline or initiating false alarms.

D. The test shall be performed with the facility operated at near or full load.

E. All alarms associated with the loss of utility power and startup of the standby generator system shall be recorded.

1. Any nuisance type alarms associated with microprocessor faults or troubles shall be investigated and action taken to prevent reoccurrence.

2. When all nuisance type alarms have been resolved, the test shall be repeated to verify acceptable operation of the facility electrical system upon loss of utility power.

3.05 CONTRACT CLOSEOUT:

A. Provide in accordance with Section 01 77 00.

END OF SECTION

SECTION 26 22 14

DRY-TYPE TRANSFORMERS

PART 1 - GENERAL

1.01 DESCRIPTION:

A. Provide copper-wound, dry-type transformers as indicated and in compliance with Contract Documents.

B. Provide transformer windings and enclosures rated for the installation location and in accordance with the requirements herein.

C. Transformers shall be “Energy Star” rated.

1.02 REFERENCES:

A. American National Standards Institute (ANSI):

1. Z55.1: Gray Finishes for Industrial Apparatus and Equipment

B. ASTM International (ASTM):

1. D635: Rate of Burning and/or Extent and Time of Burning of Self-Supporting Plastics in a Horizontal Position.

C. National Electrical Manufacturers Association (NEMA):

1. ST 20: Dry-Type Transformers for General Applications (ANSI C89.2). - withdrawn

D. International Electrical Testing Association (NETA):

1. ATS: Acceptance Testing Specifications for Electrical Power Distribution Equipment and Systems.

E. National Fire Protection Association (NFPA):

1. 70: National Electrical Code (NEC).

F. Underwriters' Laboratories, Inc. (UL):

1. 506: Standard for Specialty Transformers.

1.03 SUBMITTALS:

A. Submit the following shop drawings in accordance with Section 01 33 00:

B. Submit shop drawings and manufacturers' product data in accordance with the requirements of Section 26 05 00.

C. Submit shop drawings and manufacturer's product data of the transformer. Information to include:

1. Outline drawings including dimensions.

2. Weight.

3. Ratings and tap configuration.

4. Core and coil material.

5. Insulation system description.

6. Loss data and efficiency.

7. Accessories.

8. Mounting requirements.

9. Nameplate data.

10. Testing data.

D. Submit a Certificate of Compliance indicating conformance to the Seismic Requirements specified. Certificate shall be signed and sealed by a Professional Structural Engineer holding current registration in the state for work of this project.

E. For informational purposes only, provide manufacturers printed installation instructions including anchoring details to meet earthquake requirements as specified and indicated on structural drawings.

1.04 SEISMIC DESIGN REQUIREMENTS:

A. It shall be the responsibility of manufacturer and supplier along with the Electrical Contractor to conform to the seismic design requirements for this project and for the work of this specification section.

1.05 QUALITY ASSURANCE:

A. Provide in accordance with Section 01 40 00 and as specified.

1.06 DELIVERY, STORAGE AND HANDLING:

A. Provide in accordance with Division 1.

B. Deliver transformers individually wrapped for protection and mounted on shipping skids.

C. Accept transformers on site. Inspect for damage.

D. Store in clean, dry space. Maintain factory wrapping or provide additional canvas or plastic cover to protect units from dirt, water, construction debris, and traffic.

E. Handle and stored in accordance with manufacturer's written instructions. Lift only with lugs provided. Handle carefully to avoid damage to transformer internal components, enclosure, and finish.

1.07 REQUIREMENTS OF REGULATORY AGENCIES:

A. Furnish transformers in accordance with NEMA ST 20 and UL 506.

B. Furnish transformers with UL listing mark.

PART 2 - PRODUCTS

2.01 MANUFACTURERS:

A. Square D Co.

B. Eaton-Cutler-Hammer Corp.

C. Siemens Inc.

D. General Electric Company.

2.02 TRANSFORMERS:

A. In NEMA 1 and NEMA 12 designated areas, furnish general purpose, ventilated, dry-type transformers in indoor-style enclosure. On single-phase transformers and three-phase transformers above 9 KVA, provide not less than two windings per phase.

1. Temperature rise at hottest spot shall conform to NEMA Standards, and shall not bake and peel off the enclosure paint after the transformer has been placed in service.

2. Ventilation openings shall prevent accidental access to live components.

3. Thoroughly clean and paint enclosure at the factory with manufacturer’s prime coat and standard finish.

B. In NEMA 4 or NEMA 4X designated areas, provide transformers with encapsulated windings and stainless steel enclosures.

C. Auto transformers shall not be used in place of general purpose dry-type transformers.

D. Furnish at least two 2-1/2 percent full capacity taps above and below nominal in high voltage winding for transformers rated above 15 kVA. Two five percent taps below rated voltage for transformers rated 15 kVA and below.

E. Furnish transformers, single-phase or three-phase, as indicated. Furnish transformers with kVA ratings as indicated.

F. Furnish three-phase transformers, Delta-Wye, Delta-Delta or Wye-Wye connected as indicated, and conforming to latest NEMA standards. Scott Tee connected transformers are not acceptable above 9 kVA.

G. Isolate core and coil from enclosure using vibration-absorbing mounts.

H. Furnish transformers with primary and secondary voltages and frequency, wye connected, as indicated for secondary windings, with neutral brought out for cable termination.

I. Furnish transformers designed for continuous operation at rated kVA with normal life expectancy as defined in NEMA ST 20.

J. For transformers rated 30 kVA or less, ensure that performance is obtained without exceeding 115 degrees C average temperature rise by resistance or 145 degrees C hot spot temperature rise in 40 degrees C maximum ambient and 30 degrees C average ambient. Do not allow maximum coil hot spot temperature to exceed 185 degrees C.

K. Furnish transformers with 220 degrees C insulation materials with proven reliability for 15 kVA transformers and above. Furnish 185 degrees C insulation on transformers below 15 kVA.

L. Transformers rated greater than 30 kVA shall be provided with low-loss 80 degrees C full load operating temperature rise rating.

M. Furnish transformers made of flame retardant materials that will not support combustion as defined in ASTM D635.

N. Furnish core mounting frames and enclosures of welded and bolted construction with mechanical rigidity and strength to withstand shipping, erection and short circuit stresses.

1. Cores shall be grain oriented, non-aging, and silicon steel.

2. Coils shall be continuous windings without splices except for tapes.

3. Coil loss and core loss shall be minimum for efficient operation.

4. Primary and secondary tap connections shall be razed or pressure type.

5. Coil windings shall have end fillers or tie downs for maximum strength.

O. Transformers located in areas where fire protection system sprinklers are located shall be provided with NEMA 2 rated enclosure to protect transformer from water falling at an angle of 75 degrees from the vertical.

P. Furnish transformers designed to meet UL thermal overload test of 200 percent of rated current for one half hour.

Q. Furnish transformers not to exceed the 65 degrees C rise established by UL as safe limit for maximum surface enclosure temperature.

R. Furnish transformers with sound level not exceeding:

Average Sound Level in dB

kVA	NEMA ST 20
0-09	40
10-50	45
51-150	50
151-300	55
301-500	60

S. Install transformers with sound levels greater than 50 dB on resilient vibration isolating mounts to prevent amplification of sound. Transformers rated 15 kVA and larger to be provided with rubber washer anti-vibration pads and molded neoprene assemblies to isolate noise from the transformer to the mounting surface.

T. Provide a grounded copper electrostatic shield between the primary and secondary windings for those transformers indicated on the drawings. The design of the shield shall be to shunt noise and transients to the ground path.

2.03 SHOP TESTING:

A. Submit results of audible-sound-levels tests in accordance with NEMA ST 20 of similar size transformer.

B. Production test each unit in accordance with NEMA ST 20.

PART 3 - EXECUTION

3.01 INSTALLATION:

A. Set transformer plumb and level. Install and guard transformers as specified by latest NEC and ANSI standards, and in accordance with manufacturer's printed instructions.

B. Furnish adequate space around transformer to dispose of transformer full load losses by ventilation without creating excessive ambient temperature. Verify working clearances as required by the NEC are met.

C. Unless indicated otherwise on drawings, wall mount with suitable supports, transformers rated 15 kVA and below. Floor mount transformers rated above 15 kVA unless otherwise indicated on the drawings. In addition, all transformers located in NEMA 4 or NEMA 4X designated areas shall be wall mounted on Type 316 stainless steel channel supporting systems with Type 316 stainless steel concrete inserts, minimum 7 feet-6 inches (2.3 m) AFF. Provide all required seismic restraints.

D. Provide lifting lugs and jacking plates on transformer enclosure.

E. Provide concrete pad for all floor mounted transformers.

F. Clean metal parts, excepting cores and core mounting frames, then rust-proof and apply heavy coating of inert primer. Paint coverplates and external metal parts with two finish coats of ANSI Z55.1 No. 61 or 49 Gray.

G. Verify mounting pads are in place to reduce noise.

H. Install grounding and bonding in accordance with the drawings and Section 26 05 26.

3.02 FIELD TESTING:

A. Inspect and test in accordance with NETA ATS, except Section 4.

B. Perform inspections and tests listed in NETA ATS, Section 7.2.1.

3.03 CONTRACT CLOSEOUT:

A. Provide in accordance with Section 01 77 00.

END OF SECTION

SECTION 26 24 16

PANELBOARDS

PART 1 - GENERAL

1.01 DESCRIPTION:

A. Provide panelboards rated 600 volts or less and 1200 amperes or less.

B. Provide with circuit breakers and cabinets complete, as indicated and in compliance with Contract Documents.

1.02 REFERENCES:

A. Federal Specifications (FS):

1. QQ-S-365B: General Requirements for Silver Plating, Electro Deposited

2. W-C-375B: Automatic Circuit Breakers.

3. W-P-115A: Panel, Power Distribution.

B. National Electrical Manufacturers Association (NEMA):

1. 250: Enclosures for Electrical Equipment (1000 volts maximum)

2. AB 1: Molded Case Circuit Breakers

3. PB 1: Panelboards

C. National Fire Protection Association (NFPA):

1. 70: National Electrical Code (NEC)

D. Underwriter's Laboratories, Inc. (UL):

1. 50: Cabinets and Boxes

2. 67: Panelboards

3. 86A: Wire Connectors and Soldering Lugs for Use with Copper Conductors

4. 489: Circuit Breakers, Molded Case and Circuit Breaker Enclosures

1.03 SUBMITTALS:

A. Submit the following shop drawings in accordance with Section 01 33 00:

1.04 QUALITY ASSURANCE:

A. Provide in accordance with Section 01 40 00 and as specified.

B. All panelboards shall be designed, manufactured and assembled in accordance with the referenced standards.

C. Listing and Labeling: All panelboards shall be listed and labeled by Underwriter's Laboratories, Inc. (UL), or other nationally-recognized testing laboratory (NRTL).

D. Service Entrance panelboards shall be UL/NRTL-labeled as suitable for that purpose.

E. Single-source Responsibility: Provide panelboards products that are new, and from the same manufacturer for each building or job. Panelboard components shall be from the same manufacturer, or listed as an assembly thereof.

PART 2 - PRODUCTS

2.01 PANELBOARD MANUFACTURERS:

A. Manufacturers acceptable contingent upon products' compliance with the specifications:

1. Cutler-Hammer Products.

2. General Electric Company.

3. Siemens Corp.

4. Schneider Square D.

2.02 PANELBOARDS:

A. Factory assembled deadfront type panelboards.

B. Furnish panelboards complete with branch circuit breakers and a main circuit breaker or main lugs only as indicated.

C. Furnish panelboards with full capacity separate ground bus, separate insulated neutral bus and furnish panelboards connected to a 3 phase, 4 wire service or single phase, 3-wire service as indicated.

D. Provide panelboards with the voltage, frequency and current ratings as indicated conforming to NEMA Standard PB1, Federal Specification W-P-115A. U.L. 67, and the NEC.

E. Furnish the panelboard main and neutral buses, with minimum 98 percent conductivity rectangular copper bars provided with bolted type lugs as necessary.

F. Drill buses to fit either "A", "B" or "C" Phase connectors, and ensure that connectors are inter-changeable and installed in a distributed phase sequence.

G. Silver plate buses, connectors and terminals to a minimum thickness of 0.005-in., conforming to the requirements of Federal Spec. QQ-S-365B.

H. Prevent terminal lugs from turning per NEMA standard PB 1 and ensure they are suitable for the conductor material and size.

I. Provide main bus-bracing for each panel board adequate for 10,000 amperes symmetrical short circuit at 240 volts and 14,000 amperes symmetrical short circuit at 480 volts unless otherwise indicated.

J. Where the word “space” occurs on panel schedules, provide all necessary hardware in the space, including connection straps, mounting brackets, and filler plates so that only the addition of a future circuit breaker is required. Connection straps shall be rated a minimum of 100A in panelboards of 400A rating or less and a minimum of 225A in panelboards above 400A rating, unless otherwise noted on panel schedules.

2.03 CIRCUIT BREAKERS:

A. Each circuit breaker shall be bolted into position in the panelboard, whether by direct bolted connection to the bus or by being bolted to the panelboard frame. Each circuit breaker shall be replaceable without disturbing adjacent units. Plug-on circuit breakers held in place only by spring force of the bus lug and the pressure of the deadfront are not acceptable.

B. Furnish frame sizes, trip settings and number of poles as indicated. Clearly and visibly mark circuit breakers with ampere trip rating. Furnish breakers meeting the requirements of F.S. W-C-375B and NEMA AB1.

C. Furnish all breakers with quick-make, quick-break, toggle mechanisms and thermal-magnetic, inverse time-limit overload and instantaneous short circuit protection on all poles, unless otherwise indicated. Automatic tripping indicated by the breaker handle assuming a clearly distinctive position from the manual ON and OFF position. Furnish breaker handle that is trip-free on overloads.

D. Do not use single pole breakers with handle ties or bails in lieu of multi-pole breakers.

E. For each panelboard, furnish quantity four handle lock devices for individual breakers to prevent the manual opening of the selected breakers. Turn devices over to Owner at completion of the project work.

F. Ensure that voltage and interrupting rating of all breakers in a panelboard is not less than voltage and short circuit rating of the panelboard main buses, as indicated. Furnish breakers suitable to operate satisfactorily at the frequency indicated.

G. Furnish ground fault interrupter (GFI) circuit breakers for certain circuits as indicated on the drawings.

H. Furnish single pole breakers with full module size. Do not install two pole breakers in a single module.

I. Furnish time-current characteristic curves and catalog information and data for each size of breaker furnished.

2.04 CABINETS:

A. Provide cabinets with NEMA enclosure type as indicated and without knockouts. Drill cabinets only for the exact conduit entrances and mounting bolts.

B. Finish cabinet fronts, trims and surface-mounted boxes in ANSI No. 61 or 49, light-gray enamel over a rust-inhibitive primer. Attach the fronts (exterior trims) to the boxes or interior trims, by quarter-turn, indicating trim clamps. Design cabinets for surface or flush mounting as indicated.

C. Unless otherwise specified, construct panelboard cabinets of code-gauge galvanized, sheet steel and equip with gutters of ample size for the risers and outgoing circuits. Ensure that the cabinets do not exceed 78 inch (1980 mm) in height.

D. Trims for branch circuit panelboards shall be supplied with a hinged door over all circuit breaker handles. Doors in panelboard trims shall not uncover any live parts. Doors shall have a semi flush cylinder lock and catch assembly. Door-in-door trim shall be provided. Both hinged trim and trim door shall utilize three point latching. No tools shall be required to install or remove trim. Trim shall be equipped with a door-actuated trim locking tab. Equip locking tab with provision for a screw such that removal of trim requires a tool, at the Owner’s option. Installation shall be tamper resistant with no exposed hardware on the panelboard trim.

E. Provide enclosure with the following side gutter dimensions:

1. Left side minimum 4-1/2 inch (114 mm) measured from inside lip of the box to the installed deadfront.

2. Right side; minimum 4-1/2 inch (114 mm) measured from inside lip of the box to the installed deadfront. With the door-in-door cover in place; minimum 3-1/4 inch (83 mm) from installed outer door hinge to the installed deadfront.

2.05 FACTORY TESTING:

A. Standard factory tests shall be performed on the equipment provided under this section. All tests shall be in accordance with the latest version of NEMA and UL standards.

PART 3 - EXECUTION

3.01 INSTALLATION:

A. Mount panelboards, plumb and rigid without distortion of the box. Mount such that the height of the top operating handle does not exceed 6 feet 7 inches (2 m) from the floor.

B. Hang each door of the cabinet on semi- or fully-concealed hinges with a combination catch and lock.

C. On cabinets 48 inch (1200 mm) high and over, install a 3 point catch assembly latching at top, bottom and approximate middle.

D. Verify all panelboard locks are keyed alike.

E. Provide typed directory card filled-out to clearly indicate the load served.

F. Door hinge to be on the side opposite escape route if applicable.

3.02 CONTRACT CLOSEOUT:

A. Provide in accordance with Section 01 77 00.

END OF SECTION

SECTION 26 27 26

WIRING DEVICES

PART 1 - GENERAL

1.01 DESCRIPTION:

A. Provide field test, and place in operating condition, wiring devices as indicated and in compliance with Contract Documents.

1.02 REFERENCES:

A. Federal Specifications (FS):

1. W-C-596-F: Plug, Electrical Connector, Receptacle, Electrical.

2. W-S-896-F: (1P-2P-3W) Switch, Toggle, Single Unit with wall plates.

B. National Electrical Manufacturers Association (NEMA):

1. WD 1: General Requirements for Wiring Devices

2. WD 6: Wiring Devices – Dimensional Requirements

C. National Fire Protection Association (NFPA):

1. 70: National Electrical Code (NEC).

D. Underwriters' Laboratories, Inc. (UL):

1. 20: General Use Snap Switches.

1.03 SUBMITTALS:

A. Submit the following shop drawings in accordance with Section 01 33 00:

B. Submit shop drawings and manufacturer's product data in accordance with requirements of Section 26 05 10.

PART 2 - PRODUCTS

2.01 MANUFACTURER'S COMPLIANCE:

A. Manufacturer’s acceptance contingent upon products compliance with specifications.

B. Provide all devices with UL label.

2.02 MANUFACTURERS:

A. Allen-Bradley Co.

B. Appleton Electric Co.

C. Cooper Wiring Devices.

D. Eaton-Cutler Hammer, Inc.

E. Crouse-Hinds Co.

F. Hubbell Electrical Products.

G. Pass & Seymour, Legrand.

H. OZ Gedney.

I. Nelson Electric.

2.03 MATERIALS AND COMPONENTS:

A. Wall Switches:

1. Provide alternating current, general-use, snap switches, in flush device boxes or on outlet box covers, totally enclosed in composition case, with insulated mounting yoke and sidewired, binding screw-type terminals. Single-pole, 2-pole, 3-way, or 4-way switches rated 20 amperes at 120/277 volts a.c. Switch to meet Fed. Spec. W-S-896-F and UL-20.

2. Switches for controlling lighting:

a. Cooper Wiring Device Cat. No. 2221, 222, 2223, or 2224.

b. Hubbell Cat. No. 1221, 1222, 1223 or 1224.

c. Bryant Electric Cat. No. 4901, 4902, 4903 or 4904.

d. Pass & Seymour, Cat. No. 20AC1, 20AC2, 20AC3 or 20AC4

3. Provide pilot type lighting for switches controlling lights in seldom frequented locations.

B. Watertight Switches:

1. Provide watertight switches consisting of flush mounting switches in NEMA Type 4 gasketed cast metal boxes. Switch operable through shaft in matching cast metal cover, twenty-ampere, 120/277-volt switch enclosures:

a. Crouse-Hinds Type MC or MCC.

b. Appleton Cat. No. WDM 175 and WVG1

c. OZ Gedney Cat. No. WSP and WCT120

C. Explosionproof Switches:

1. Provide explosionproof switches consisting of flush mounting switches in cast metal boxes meeting requirements for NEMA Type 7D enclosure approved for use in NEC Class I, Group D, Division 1, atmosphere. Switch operable through shaft in matching cast metal cover. 20-ampere, 120/277-volt switch assemblies:

a. Crouse-Hinds Type EFS.

b. Appleton Electric Type EFS.

c. Nelson Electric Cat. No. SCAD.

D. Flush Receptacles:

1. Provide 20-ampere, 125-volt flush receptacles constructed in flush device boxes, and of grounding type in composition case with insulated mounting yoke, side-wired, binding screw-type terminals. Receptacles to conform to Fed. Spec. W-C-596-F.

2. Duplex receptacles:

a. Cooper Wiring Devices Cat. No. 5362.

b. Hubbell Cat. No. 5362.

c. Bryant Electric Cat. No. 5362.

d. Pass & Seymour Cat. No. 5342.

3. Duplex GFCI Type Receptacles:

a. Harvey Hubbell, Inc. Cat. No. CR5352.

b. Cooper Wiring Devices Cat. No. GF20.

c. Leviton Manufacturing Company Cat. No. 6899.

4. Single receptacles:

a. Cooper Wiring Devices Cat No. 5361.

b. Hubbell Cat. No. 5361.

c. Pass & Seymour Cat. No. 5351.

E. Special Receptacles:

1. Provide weatherproof devices rated 20 ampere, 125-volt, consisting of single receptacles with spring-loaded, soft-gasketed hinged covers with stainless steel spring. Covers as follows:

a. Hubbell Cat. No. 5206.

b. Bryant Electric Cat. No. 4510.

c. Crouse-Hinds Cat. No. WLRS-1.

2. Provide in corrosive areas (NEMA 4X) a receptacle similar to the weatherproof device described above. Cover as follows:

a. Crouse-Hinds Cat. No. WLRS-1-S752.

3. Provide watertight, gasketed cast-metal enclosures with covers in areas subject to hose-down, meeting requirements, and either standard single or duplex type:

a. Appleton Electric Cat. No. AEE3382 and AEP3361, Style 2.

b. Crouse-Hinds Cat. No. ARRH33 and APJ3385, Style 2.

4. Provide receptacles with matching plug or cord cap designed to meet NEMA 4 requirements when plug, cord and receptacle are assembled.

5. Provide explosion proof 20-ampere receptacles, of the delayed action type, preventing contact from being broken until arc has been extinguished. Receptacles with angle covers and spring-closed flaps:

a. Crouse-Hinds Type CPS.

b. Appleton Electric Type CPS.

6. Furnish one explosion proof plug for each three receptacles, with minimum of one. Plugs to match receptacles and from same manufacturer.

7. Provide welding receptacles whereby plug ground contact makes contact with receptacle ground contact before current carrying contacts engage, and when withdrawing plug, ground contact remains engaged until after current carrying ground contacts disengage. Provide ampere rating as indicated on the drawings.

F. Outlet Boxes and Enclosures:

1. Provide outlet boxes and enclosures conforming to Section 26 05 33and enclosure schedule on the drawings unless otherwise indicated.

G. Device Plates:

1. Provide device plates suitable for type of outlet boxes and enclosures used. Plates for flush-mounting by device manufacturer. Plates for surface-mounting boxes by either device manufacturer or box manufacturer.

2. Provide flush device plates of high corrosion resistant, Type 302 stainless steel.

3. Provide flush device plates of material and finish indicated, in certain designated areas.

PART 3 - EXECUTION

3.01 GENERAL:

A. Perform all work in accordance with the NEC.

3.02 CONNECTION:

A. Securely and rigidly attach wiring devices in accordance with regulating agency, and as indicated, avoiding interference with other equipment.

B. Securely fasten nameplates using screws, bolts, or rivets and centered under or on the device, unless otherwise indicated.

3.03 GROUNDING:

A. Ground all devices in accordance with NEC.

B. Ground switches and their metal plates through switch mounting yoke, outlet box, and raceway system.

C. Ground flush receptacles and their metal plates through positive ground connection to outlet box and grounding system. Maintain ground to each receptacle by spring-loaded grounding contact to mounting screw, or by grounding jumper, both making positive connection to outlet box and grounding system at all times.

D. Ground explosion proof receptacles and plugs by making contact between the metal shells, and also by using a grounding pin to make contact before power contacts are made.

3.04 LABELING:

A. All wall plates to be engraved with the panelboard alpha-numeric identifier and circuit breaker number.

1. Characters to be 5/16 inch (8 mm) in size and black in color.

2. All engravings to match panelboard typed circuit breaker directories.

3.05 CONTRACT CLOSEOUT:

A. Provide in accordance with Section 01 77 00.

END OF SECTION

SECTION 26 50 00

INTERIOR LIGHTING

PART 1 - GENERAL

1.01 DESCRIPTION:

A. Provide complete indoor lighting systems as indicated and in compliance with Contract Documents .

B. Light fixture schedules are provided on the Contract Drawings. These Specifications are to be considered supplementary to the information contained in the light fixture schedule. In areas of conflict the scheduled items shall be provided.

C. Fixtures shall be “Energy Star” rated.

1.02 DEFINITIONS

A. Emergency Lighting Unit: Fixture with integral emergency battery-powered supply and means for controlling and charging battery. Also known as an emergency light set.

B. Fixture: Complete lighting unit, exit sign, or emergency lighting unit. Fixtures include lamps and parts required to distribute light, position and protect lamps, and connect lamps to power supply. Internal battery-powered exit signs and emergency lighting units also include battery and means for controlling and recharging battery. Emergency lighting units include ones with and without integral lamp heads.

1.03 REFERENCES:

A. American National Standards Institute (ANSI):

1. C78.377: Chromaticity of Solid State Lighting Products.

2. C81.10: Electric Lamp Bases and Holders, Screw-Shell Types.

3. C81.20: Electric Lamp Bases and Holders, Fluorescent types.

4. C82.1 and Supplement C82.1a: Fluorescent Lamp Ballasts.

5. C82.4: High Intensity Discharge and Low Pressure Sodium Lamps.

6. C82.5: High Intensity Discharge Lamp Reference Ballasts.

C. Design Lights Consortium (DLC)

D. Federal Specifications and Standards (FS):

1. W-L-101(5): Lamp, Incandescent (Electric, large, Tungsten Filament)

2. W-L-001166: Lamps, Fluorescent

3. W-L-142a: Lampholder, adaptor, and shadeholder, medium screw-shell, 125, 250, and 600 volts.

E. National Fire Protection Association (NFPA):

1. 70: National Electrical Code (NEC).

2. 101: Life Safety Code.

G. Underwriters' Laboratories, Inc., (UL):

1. 773: Standard for Plug-In Locking Type Photo Controls for use with Area Lighting.

2. 773A: Nonindustrial Photo Electric Switches for Lighting Control.

3. 844: Standard for Electric Lighting Fixtures for Use in Hazardous (Classified) Locations.

4. 924: Standard for Emergency Lighting and Power Equipment.

5. 935: Standard for Fluorescent Lamp Ballasts.

6. 1029: Standard for Safety High Intensity Discharge lamp Ballasts.

7. 1598: UL Standard for Safety Luminaires

8. 8750: Light Emitting Diode (LED) Equipment for Use in Lighting Products.

H. Illuminating Engineering Society of North America (IESNA or IES):

1. LM-79: IESNA Approved Method for the Electrical and Photometric Measurements of Solid-State Lighting Products

2. LM-80: IESNA Approved Method for Measuring Lumen Maintenance of LED Light Sources

1.04 SUBMITTALS:

A. Submit shop drawings in accordance with Section 01 33 00:

B. Submit shop drawings and manufacturer's product data with installation instructions in accordance with the requirements of Section 26 05 10.

C. Submit manufacturer's shop drawings including photometric laboratory test data to show that luminaires proposed are of same type, construction and quality as those indicated. Luminaires are to be listed and labeled by Underwriters' Laboratories.

D. Submit manufacturer's data for each ballast provided. Include detailed information for each luminaire showing wattage, voltage, and full load amp draw for each.

E. Submit photometric calculations based on maintained lighting foot candle levels for areas where lighting fixtures are substituted. Substituted fixtures must provide similar lighting performance and energy usage as those scheduled, and must be constructed of similar quality and materials.

1.05 QUALITY ASSURANCE:

A. Provide in accordance with Section 01 40 00 and as specified.

B. Provide hangers and supports to resist failure from earthquake damage in accordance with NEC and all local and State codes.

C. Lighting fixtures to be provided with dedicated supporting systems.

D. Comply with the Code for Buildings and all local and State energy laws and regulations.

1.06 EXTRA MATERIALS:

A. Furnish extra materials described below that match products installed, are packaged with protective covering for storage, and are identified with labels describing contents.

1. Lamps: 10 lamps for every 100 of each type and rating installed. Furnish at least 1 of each type.

2. Plastic Diffusers and Lenses: 1 for every 100 of each type and rating installed. Furnish at least 1of each type.

3. Ballasts: 1 for every 100 of each type and rating installed. Furnish at least 1 of each type.

4. Globes and Guards: 1 for every 20 of each type and rating installed. Furnish at least 1 of each type.

PART 2 - PRODUCTS

2.01 GENERAL:

A. Metal Parts: Free from burrs, sharp corners, and edges.

B. Sheet Metal Components: Steel, except as indicated. Form and support to prevent warping and sagging.

C. Doors, Frames, and Other Internal Access: Smooth operating, free from light leakage under operating conditions, and arranged to permit relamping without use of tools. Arrange doors, frames, lenses, diffusers, and other pieces to prevent accidental falling during relamping and when secured in operating position.

D. Reflecting Surfaces: Minimum reflectance as follows, except as otherwise indicated:

1. White Surfaces: 85 percent.

2. Specular Surfaces: 83 percent.

3. Diffusing Specular Surfaces: 75 percent.

4. Laminated Silver Metallized Film: 90 percent.

E. Lenses, Diffusers, Covers, and Globes: 100 percent virgin acrylic plastic or water white, annealed crystal glass, except as otherwise indicated.

1. Plastic: High resistance to yellowing and other changes due to aging, exposure to heat, and UV radiation.

2. Lens Thickness: 0.125 inches (3 mm) minimum; except where greater thickness is indicated.

F. Fixture Support Components:

1. Single Stem Hangers: 1/2 inches (12 mm) steel tubing with swivel ball fitting and ceiling canopy. Finish same as fixture.

2. Twin Stem Hangers: Two, 1/2 inch (12 mm) steel tubes with single canopy arranged to mount a single fixture. Finish same as fixture.

3. Rod Hangers: 3/8 inch (9.5 mm) minimum diameter, zinc plated, threaded steel rod.

4. Hook Hanger: Integrated assembly matched to fixture and line voltage and equipped with threaded attachment, cord, and locking type plug.

G. Fluroescent fixtures: Conform to UL 1570.

H. High Intensity Discharge (HID) fixtures: Conform to UL 1572.

I. Incandescent fixtures: Conform to UL 1571.

J. Provide filters in each light fixture mounted in shielded enclosures.

1. Filters shall be integral to the fixture assembly with one filter per ballast.

2. Filters shall suppress electromagnetic interference in the AM radio band from 500 to 1700 kHz.

2.02 LAMPS:

A. Furnish lamps of types and wattages shown in luminaire schedule.

B. Unless otherwise indicated, furnish fluorescent lamps suitable for 120-volt operation. Type: Rapid start, standard cool white, 48-inch (1220 mm) long, T-8 lamps.

C. T-8 rapid start lamps shall be rated 32 watts (maximum), 2800 initial lumens (minimum), CRI of 75 (minimum), color temperature of 3500 K, and an average rated life of 20,000 hours.

D. Standby HPS lamps shall have two arc tubes and an average rated life of 40,000 hours (minimum) and hot restart instant lumen output shall be 8 percent, minimum, of total light output.

E. Metal Halide lamps shall have color temperature of 3600K and minimum color rendering index of 70 CRI.

2.03 BALLASTS:

A. Fluorescent Ballasts:

B. All ballasts must be of the universal voltage type and suitable for use on 120 – 277V systems.

1. Ballast shall comply with UL 935 and NFPA 70 unless specified otherwise. Ballast shall be 100 percent electronic high frequency type with no magnetic core and coil components.

2. Ballast shall be designed for the wattage of the lamps used in the indicated application. Ballasts shall be designed to operate on the voltage system to which they are connected.

3. Power factor shall be 0.95 (minimum).

4. Ballast shall operate at a frequency of 20,000 Hertz (minimum). Ballast shall be compatible with and not cause interference with the operation of occupancy sensors or other infrared control systems. Provide ballasts operating at or above 40,000 Hertz where available.

5. Ballast shall have light regulation of plus or minus 10 percent lumen output with a plus or minus 10 percent input voltage regulation. Ballast shall have 10 percent flicker (maximum) using any compatible lamp.

6. Ballast factor shall be between 0.85 (minimum) and 1.00 (maximum). Current crest factory shall be 1.7 (maximum).

7. Ballast shall be UL listed Class P with a sound rating of "A".

8. Ballast shall have circuit diagrams and lamp connections displayed on the ballast.

9. Ballasts shall be instant start unless otherwise indicated. Instant start ballasts shall operate lamps in a parallel circuit configuration that permits the operation of remaining lamps if one or more lamps fail or are removed.

10. Electronic ballasts to provide less than 10 percent total harmonic distortion.

11. Where dual level lighting with multiple lamps and fixtures are shown on the drawings, provide a single ballast serving multiple fixtures. Fixtures shall be manufactured with an integral wire way to accommodate this installation.

C. HID Ballasts:

1. Provide HID system ballasts in accordance with UL 1029. The ballasts shall be constant wattage autotransformer (CWA) or regulator, high power factory type (minimum 90 percent).

2. Provide single-lamp ballasts which shall be a minimum starting temperature of minus 30 degrees C.

3. Ballasts shall be:

a. Designed to operate on the voltage system to which they are connected.

b. Designed for installation in a normal ambient temperature of 20 to 40 degrees C.

c. Constructed so that open circuit operation will not reduce the average life.

D. High Pressure Sodium Ballasts:

1. High pressure sodium (HPS) ballasts shall have a solid-state igniter/starter with an average life in the pulsing mode of 3500 hours at the intended ambient temperature. Igniter case temperature shall not exceed 90 degrees C in any mode.

2.04 LED FIXTURES:

A. Provide fixtures on the DesignLights Consortium (DLC) Qualified Products List.

B. Thermal Management: Liquids or other moving parts shall be clearly indicated in submittals, and shall be consistent with product testing.

C. Color Rendering Index (CRI): >70.

D. Correlated Color Temperature: 4000K.

E. Minimum luminaire efficacies: 85 lumens per watt. Nominal input wattage shall account for nominal applied voltage and any reduction in driver efficiency due to sub-optimal driver loading.

F. Fully enclosed wiring and LED diodes enclosed to prevent penetration of dust, insects, and other debris into the lamp and driver compartment.

G. Driver/LED combined system shall have rated life based on IESNA LM-80-2008 (or latest) of 50,000 hrs at 70% lumen maintenance.

H. Driver is high efficiency type with THD < 20 percent and power factor > 0.90.

2.05 EMERGENCY LIGHTING AND EXIT LIGHTING UNITS:

A. Exit Signs: Conform to UL 924 and following:

1. Sign Colors: Conform to local code.

2. Minimum Height of Letters: Conform to local code.

3. Arrows: Include as indicated.

B. Emergency Lighting Units: Conform to UL 924. Provide self contained units with following features:

1. Battery: Sealed, maintenance free, lead acid type with minimum 10 yr nominal life and special warranty.

2. Charger: Minimum 2 rate, fully automatic, solid state type, with sealed transfer relay.

3. Operation: Relay automatically turns lamp on when supply circuit voltage drops to 80% of nominal voltage or below. Lamp automatically disconnects from battery when voltage approaches deep discharge level. Relay disconnects lamps and battery and automatically recharges and floats on trickle charger when normal voltage is restored.

4. Wire Guard: Where indicated, provide heavy chrome plated wire guard arranged to protect lamp heads or fixtures.

5. Time Delay Relay: Provide time delay relay in emergency lighting unit control circuit arranged to hold unit ON for fixed interval after restoration of power after outage. Provide adequate time delay to permit HID lamps to restrike and develop adequate output.

2.06 LIGHTING CONTROLS:

A. Occupancy Sensors:

1. Sensor type, PIR wide view.

2. Manual-adjusting, 180 degree pattern, with load rating of 1800 watts at 120V.

3. Includes manual off-on control.

4. Delay off settings for 10, 20, or 30 minutes and 30 second test setting.

5. LED indicator flashes when sensor detects motion.

6. Leviton Model IPP15-1LT or equal.

PART 3 - EXECUTION

3.01 LUMINAIRES AND LAMPS:

A. Install types and sizes indicated, complete. Deliver lamps of proper type, wattage and voltage rating to site and install in luminaires prior to completion of project.

B. Install all luminaires to comply with applicable provisions of National Electrical Code. Suspend pendant luminaires by means of suitable outlet box cover-type aligners, each having flexible joint permitting unit to hang plumb.

1. Provide hangers capable of supporting twice the combined weight of fixtures supported by hangers.

2. Provide with swivel hangers to ensure a plumb installation. Hangers shall be cadmium-plated steel with a swivel-ball tapped for the conduit size indicated.

3. Brace pendants 4 feet or longer to limit swinging.

4. Single-unit suspended fixtures shall have twin-stem hangers.

5. Multiple-unit or continuous row fixtures shall have a tubing or stem for wiring at one point and a tubing or rod suspension provided for each unit length of chassis, including one at each end.

6. Rods shall be a minimum 3/8-inch (9.5 mm) diameter.

C. Use aligners of shock absorbing type, where indicated.

D. Use vaportight aligners with vaportight luminaires.

E. Install each explosion-proof pendant luminaire having stem longer than 12 inches (305 mm), with explosion-proof swivel or flexible fitting permitting luminaire to hang plumb. Luminaires with stems shorter than 12 inches (305 mm) aligned by level outlet box mounting, explosion-proof swivels, or other acceptable means.

F. Install luminaires with adjustable fittings to permit alignment with ceiling panels. Install luminaires in fire-resistive type of suspended ceiling construction, equipped with fireproofing boxes constructed of materials of same fire rating as ceiling panels. Materials in conformance with UL approved building materials list.

G. Support for Recessed and Semi-recessed Grid Type Fixtures: Support Units from suspended ceiling support system. Install ceiling support system rods or wires at minimum of 4 rods or wires for each fixture, located not more than 6 inches (150 mm) from fixture corners.

1. Install support clips for recessed fixtures, securely fastened to ceiling grid members, at or near each fixture corner.

2. Fixtures Smaller than Ceiling Grid: Install minimum of 4 rods or wires for each fixture and locate at corner of ceiling grid where fixture is located. Do not support fixtures by ceiling acoustical panels.

3. Fixtures of Sizes Less than Ceiling Grid: Center in acoustical panel. Support fixtures independently with at least two 3/4 inch (20 mm) metal channels spanning and secured to ceiling tees.

H. Where 400 watt metal halide lamps are provided in enclosed fixtures, provide a warning sign above the lighting switches as follows:

"WARNING: 400 WATT HID METAL HALIDE FIXTURES ARE TO BE TURNED OFF FOR A MINIMUM OF 15 MINUTES PER WEEK TO AVOID LAMP RUPTURE"

I. Install accessories such as straps, mounting plates, nipples, or brackets necessary for proper installation.

J. Connect emergency light units to the unswitched branch circuit powering the luminaires in the same space.

K. Within 30 days of substantial completion, re-lamp all fixtures.

3.02 CONTRACT CLOSEOUT

A. Provide in accordance with Section 01 77 00.

END OF SECTION

SECTION 26 56 00

EXTERIOR LIGHTING

PART 1 - GENERAL

1.01 DESCRIPTION:

A. Provide complete outdoor lighting systems as indicated and in compliance with Contract Documents.

B. Light fixture schedules are provided on the Contract Drawings. These Specifications are to be considered supplementary to the information contained in the light fixture schedule. In areas of conflict the scheduled items shall be provided.

C. Fixtures shall be “Energy Star” rated.

1.02 REFERENCES:

A. American Association of State Highway and Transportation Officials (AASHTO):

1. LTS-3: Standard Specifications for Structural Supports for Highway Signs, Luminaires and Traffic Signals

B. American National Standards Institute (ANSI):

1. C78: Fluorescent Lamps - Rapid-Start Types

C. ASTM International (ASTM):

1. A500/A500M: Cold Formed Welded and Seamless Carbon Steel Structural Tubing.

2. B209/B209M: Standard Specification for Aluminum and Aluminum-Alloy Sheet and Plate

3. B429/B429M: Standard Specification for Aluminum-Alloy Extruded Structural Pipe and Tube

E. Institute of Electrical and Electronics Engineers (IEEE):

1. C62.41.1: IEEE Guide on the Surges Environment in Low-Voltage (1000V and Less) AC Power Circuits

2. C62.41.2: IEEE Recommended Practice on Characterization of Surges in Low-Voltage (1000 V and Less) AC Power Circuits

F. National Electrical Manufacturers Association (NEMA):

1. C82.4: For Lamp Ballasts - Ballasts for High-Intensity-Discharge and Low-Pressure Sodium Lamps (Multiple-Supply Type)

G. National Fire Protection Association (NFPA):

1. 70: National Electrical Code (NEC).

H. Underwriters' Laboratories, Inc. (UL):

1. 773: UL Standard for Safety Plug-In Locking Type Photocontrols for Use with Area Lighting-Fourth Edition

2. 844: UL Standard for Safety Luminaires for Use in Hazardous (Classified) Locations-Twelfth Edition

3. 1029: Standard for Safety High Intensity Discharge lamp Ballasts.

4. 1598: UL Standard for Safety Luminaires

1.03 DEFINITIONS:

A. Fixture: Complete lighting device. Fixtures include lamp or lamps and parts required to distribute light, position and protect lamps, and connect lamps to power supply.

B. Luminaire: Fixture.

1.04 SUBMITTALS:

A. Submit the following shop drawings in accordance with Section 01 33 00.

B. Submit shop drawings and manufacturer's product data with installation instructions in accordance with the requirements of Section 26 05 10.

C. Submit manufacturer's shop drawings including photometric laboratory test data to show that luminaires proposed are of same type, construction and quality as those indicated. Luminaires are to be listed and labeled by Underwriters' Laboratories.

D. Submit manufacturer’s data for each ballast provided. Include detailed information for each luminaire showing wattage, voltage, and full load amp draw for each.

E. Submit photometric calculations based on maintained lighting foot candle levels for areas where lighting fixtures are substituted. Substituted fixtures must provide similar lighting performance and energy usage as those scheduled, and must be constructed of similar quality and materials.

F. Product Data:

1. Describe fixtures, lamps, ballasts, and accessories. Arrange Product Data for fixtures in order of fixture designation. Include data on features, accessories, finishes, and following:

    a. Outline drawings indicating dimensions and principal features of fixtures.

    b. Electrical Ratings and Photometric Data: Certified results of laboratory tests for fixtures and lamps.

G. Shop Drawings:

1. Detail nonstandard fixtures and indicating dimensions, weights, method of field assembly, components, and accessories.

2. Wiring diagrams detailing wiring for control system showing both factory installed and field installed wiring for specific system of this Project, and differentiating between factory installed and field installed wiring.

H. Test Results: Indicate and interpret test results.

I. Operating and Maintenance Data (O&M): Maintenance data for products to include operation and maintenance information.

1.05 QUALITY ASSURANCE:

A. Comply with IEEE C2.

B. Items provided under this section shall be listed or labeled labelled by UL or other Nationally Recognized Testing Laboratory (NRTL).

1. Term “NRTL” shall be as defined in OSHA Regulation 1910.7.

2. Terms “listed” and “labeled” shall be as defined in National Electrical Code (NEC), Article 100.

C. Regulatory Requirements:

1. National Electrical Code (NEC): Components and installation shall comply with National Fire Protection Association (NFPA) 70.

D. Fixtures for Hazardous Locations: Conform to UL 844. Provide units that have Factory Mutual Engineering and Research Corporation (FM) certification for indicated class and division of hazard.

PART 2 - PRODUCTS

2.01 FIXTURES AND FIXTURE COMPONENTS:

A. Metal Parts: Free from burrs, sharp edges, and corners.

B. Sheet Metal Components: Corrosion resistant aluminum, except as otherwise indicated. Form and support to prevent warping and sagging.

C. Housings: Rigidly formed, weather and light tight enclosures that will not warp, sag, or deform in use. Provide filter/breather for enclosed fixtures.

D. Doors, Frames, and Other Internal Access: Smooth operating, free from light leakage under operating conditions, and arranged to permit relamping without use of tools. Arrange doors, frames, lenses, diffusers, and other pieces to prevent accidental falling during relamping and when secured in operating position. Provide for door removal for cleaning or replacing lens. Arrange for door opening to disconnect ballast.

E. Exposed Hardware Material: Stainless steel.

F. Reflecting Surfaces: Minimum reflectances as follows, except as otherwise indicated:

1. White Surfaces: 85 percent

2. Specular Surfaces: 83 percent

3. Diffusing Specular Surfaces: 75 percent

G. Plastic Parts: High resistance to yellowing and other changes due to aging, exposure to heat, and UV radiation.

H. Lenses and Refractors: Materials as indicated. Use heat- and aging-resistant, resilient gaskets to seal and cushion lens and refractor mounting in fixture doors.

I. Photoelectric Relays: Conform to UL 773.

1. Contact Relays: Single throw, arranged to fail in ON position and factory set to turn light unit on at 1.5 to 3 foot-candles (16 to 32 lux) and off at 4.5 to 10 foot-candles (48 to 108 lux) with 15 sec minimum time delay.

2. Relay Mounting: In fixture housing.

J. Electronic Timer Switch:

1. Programmable for 24-hour or 7 day schedules with resolution to the minute.

2. Automatic daylight savings changeover.

3. Ni-Cad battery maintains program for 2 weeks or more.

4. Intermatic model Digi 42/2-120 or equal.

K. Fluorescent Fixtures: Conform to UL 1570.

L. High-Intensity-Discharge (HID) Fixtures: Conform to UL 1572.

M. Incandescent Fixtures: Conform to UL 1571.

2.02 LAMPS

A. Furnish lamps of types and wattages shown in luminaire schedule.

B. Standby HPS lamps shall have two arc tubes and an average rated life of 40,000 hours (minimum) and hot restart instant lumen output shall be 8 percent, minimum, of total light output.

C. Metal Halide lamps shall have color temperature of 3600K and minimum color rendering index of 70 CRI.

2.03 BALLASTS

A. Fluorescent Ballasts: Class P, low temperature, electromagnetic type, compatible with lamps and lamp combinations to which connected.

1. Certification by Electrical Testing Laboratory (ETL).

2. Labeling by Certified Ballast Manufacturers Association (CBM).

3. Sound Rating: "A" rating, except as otherwise indicated.

4. Voltage: Match connected circuits.

5. Minimum Power Factor: 90 percent.

6. Total Harmonic Distortion (THD) of Ballast Current: Less than 20 percent.

7. Conform to FCC Regulations Part 15, Subpart J for electromagnetic interference.

8. Conform to IEEE C62.41.1 / IEEE C62.41.2, Category A, for resistance to voltage surges for normal and common modes.

9. Minimum Starting Temperature: -20 degrees C.

B. HID Ballasts: Conform to UL 1029 and NEMA C82.4. Constant wattage autotransformer (CWA) or regulating high power factor type, unless otherwise indicated.

1. Ballast Fuses: 1 inch each ungrounded supply conductor. Voltage and current ratings as recommended by ballast manufacturer.

2. Operating Voltage: Match system voltage.

3. Single-Lamp Ballasts: Minimum starting temperature of minus 30 degrees C.

4. Open circuit operation will not reduce average life.

5. High Pressure Sodium (HPS) Ballasts: Equip with solid-state igniter/starter having average life in pulsing mode of 10,000 hrs at igniter/starter case temperature of 90 degrees C.

6. Noise: Uniformly quiet operation, with a noise rating of B or better.

C. Instant Restrike Device: Solid-state, potted module, mounted inside fixture and compatible with mogul-based HPS lamps, ballasts, and sockets up to 150 W.

1. Restrike Range: 105 to 130 VAC.

2. Maximum Voltage: 250v peak or 150 VAC RMS.

D. Auxiliary, Instant-On, Quartz System: Automatically switches quartz lamp when fixture is initially energized and when momentary power outages occur. Turns quartz lamp off automatically when HID lamp reaches approximately 60 percent light output. Mount control components internal to ballast and independent of incoming line voltage.

2.04 LED FIXTURES

A. Provide fixtures on the DesignLights Consortium (DLC) Qualified Products List.

B. Thermal Management: Liquids or other moving parts shall be clearly indicated in submittals, and shall be consistent with product testing.

C. Color Rendering Index (CRI): >70.

D. Correlated Color Temperature: 4000K.

E. Minimum luminaire efficacies: 85 lumens per watt. Nominal input wattage shall account for nominal applied voltage and any reduction in driver efficiency due to sub-optimal driver loading.

F. Fully enclosed wiring and LED diodes enclosed to prevent penetration of dust, insects, and other debris into the lamp and driver compartment.

G. Driver/LED combined system shall have rated life based on IESNA LM-80-2008 (or latest) of 50,000 hrs at 70 percent lumen maintenance.

H. Driver is high efficiency type with THD < 20 percent and power factor > 0.90.

I. Outdoor fixtures capable of reliable operation in temperature range of -30 degrees C to +40 degrees C minimum.

2.05 FINISHES:

A. Metal Parts: Manufacturer's standard finish, except as otherwise indicated, applied over corrosion resistant primer, free of streaks, runs, holidays, stains, blisters, and similar defects.

B. Other Parts: Manufacturer's standard finish, except as otherwise indicated.

PART 3 - EXECUTION

3.01 INSTALLATION:

A. Set units plumb, square, level, and secure according to manufacturer's written instructions and accepted submittals.

B. Fixture Attachment: Fasten to indicated structural supports.

C. Fixture Attachment with Adjustable Features or Aiming: Attach fixtures and supports to allow aiming for indicated light distribution.

D. Lamp fixtures with indicated lamps according to manufacturer's written instructions. Replace malfunctioning lamps.

3.02 FIELD QUALITY CONTROL:

A. Inspect each installed unit for damage. Replace damaged fixtures and components.

B. Tests and Observations:

1. Give advance notice of dates and times for field tests.

2. Provide instruments to make and record test results.

3. Verify normal operation of lighting units after installing fixtures and energizing circuits with normal power source. Include following:

a. Photometric Tests: Measure light intensities at night at locations where specific illumination performance is indicated. Use photometers with calibration referenced to National Institute of Standards and Technology (NIST) standards.

b. Check for intensity of illumination.

c. Check for uniformity of illumination.

d. Check for excessively noisy ballasts.

e. Prepare written report of tests indicating actual illumination results.

4. Replace or repair damaged and malfunctioning units, make necessary adjustments, and retest. Repeat procedure until units operate properly.

3.03 ADJUSTING AND CLEANING:

A. Clean units after installation. Use methods and materials recommended by manufacturer.

B. Adjust aimable fixtures to provide required light intensities.

3.04 CONTRACT CLOSEOUT:

A. Provide in accordance with Section 01 77 00.

END OF SECTION

SECTION 40 05 00

GENERAL PIPING REQUIREMENTS

PART 1 - GENERAL

1.01 DESCRIPTION

This section describes the Process Piping Schedule shown in Section 40 23 19.05 and the general requirements for selecting piping materials; selecting the associated bolts, nuts, and gaskets for flanges for the various piping services in the project; and miscellaneous piping items.

1.02 SUBMITTALS

A. Submit shop drawings in accordance with Section 01 33 00.

B. Submit affidavit of compliance with referenced standards (e.g., AWWA, ANSI, ASTM, etc.).

C. Submit certified copies of mill test reports for bolts and nuts, including coatings if specified. Provide recertification by an independent domestic testing laboratory for materials originating outside of the United States.

D. Submit manufacturer's data sheet for gaskets supplied showing dimensions and bolting recommendations.

1.03 DEFINITIONS OF BURIED AND EXPOSED PIPING

A. Buried piping is piping buried in the soil, commencing at the wall or beneath the slab of a structure. Where a coating is specified, provide the coating up to the structure wall. Unless detailed otherwise, coating shall penetrate wall no less than 1 inch. Piping encased in concrete is considered to be buried. Do not coat encased pipe.

B. Exposed piping is piping in any of the following conditions or locations:

1. Above ground.

2. Inside buildings, vaults, or other structures.

3. In underground concrete trenches or galleries.

1.04 PIPING SERVICE

Piping service is determined by the fluid conveyed, regardless of the pipe designation. For example, pipes designated "Air Low Pressure," "Air High Pressure," and "Air" are all considered to be in air service.

PART 2 - MATERIALS

2.01 MATERIALS SELECTION AND ALTERNATIVE MATERIALS

A. The Process Piping Schedule in Section 40 23 19.05 lists the material and specification for each piping service in the project. In locations where the piping material referenced on the Process Piping Schedule is not appropriate, the piping material is indicated in the drawings. Materials called out in the drawings shall govern over materials stated in the Piping Schedule.

B. The drawings may show alternative piping materials for certain services. In such cases, the same pipe material shall be used for all pipe sizes in all locations for the given piping service. Do not intermix piping materials.

2.02 THREAD FORMING FOR STAINLESS STEEL BOLTS

Not Used

2.03 BOLTS AND NUTS FOR FLANGES FOR STAINLESS STEEL PIPE

Not Used

2.04 LUBRICANT FOR STAINLESS STEEL BOLTS AND NUTS

Not Used

2.05 GASKETS FOR FLANGES FOR STEEL, STAINLESS STEEL, LINED STEEL, AND DUCTILE-IRON PIPING

Gaskets shall be suitable for a maximum pressure of 300 psi and a maximum temperature of 500°F. Gaskets for stage service shall be one of the following materials:

A. Teflon envelope type, full face, 1/8-inch insert, with compressed non-asbestos filler. Provide free-flow design in which the Teflon is machined or milled between leaves to provide a space for the filler.

B. PTFE with inert filler, 1/8-inch thick. Product: Garlock "Gylon."

C. Viton B, 1/8-inch thick.

2.06 MOLDABLE FILLER TAPE FOR PIPE SURFACE TRANSITION AREAS

A. Filler tape shall be a 100% solids mastic-like butyl-rubber filler designed to fill and smooth the transition areas between adjacent coating surfaces such as step-down weld areas, surface irregularities beneath heat-shrink sleeves, pipefittings, and exothermic welds for cathodic protection bonding wire connections. Characteristics:

1. Thickness per ASTM D1000: 1/8 inch minimum.

2. Peel adhesion to primed pipe: 300 ounces per inch minimum.

3. Elongation: 600% minimum.

B. Products: Tapecoat “Moldable Sealant,” Polyken No. 939 Filler Tape, or equal.

PART 3 - EXECUTION

3.01 RAISED FACE AND FLAT FACE FLANGES

Where a raised face flange connects to a flat-faced flange, remove the raised face of the flange.

3.02 INSTALLING ABOVEGROUND OR EXPOSED PIPING

A. Provide pipe hangers and supports as detailed in the drawings.

B. Install pipe without springing, forcing, or stressing the pipe or any adjacent connecting valves or equipment.

3.03 INSTALLING FLANGED PIPING

A. Set pipe with the flange bolt holes straddling the pipe horizontal and vertical centerline. Install pipe without springing, forcing, or stressing the pipe or any adjacent connecting valves or equipment. Before bolting up, align flange faces to the design plane within 1/16 inch per foot measured across any diameter. Align flange bolt holes within 1/8-inch maximum offset.

B. Inspect each gasket to verify that it is the correct size, material, and type for the specified service and that it is clean and undamaged. Examine bolts or studs, nuts, and washers for defects such as burrs or cracks and rust and replace as needed.

C. Clean flanges by wire brushing before installing flanged fittings. Clean flange bolts and nuts by wire brushing, lubricate carbon steel bolts with oil and graphite, and tighten nuts uniformly and progressively.

D. Bolt lengths shall extend completely through their nuts. Any that fail to do so shall be considered acceptably engaged if the lack of complete engagement is not more than one thread.

E. Do not use more than one gasket between contact faces in assembling a flanged joint.

F. Tighten the bolts to the manufacturer’s specifications, using the recommended cross bolt pattern in multiple steps of increasing torque, until the final torque requirements are achieved. Do not over torque.

G. If flanges leak under pressure testing, loosen or remove the nuts and bolts, reset or replace the gasket, reinstall or retighten the bolts and nuts, and retest the joints. Joints shall be watertight.

3.04 INSTALLING BLIND FLANGES

A. At outlets not indicated to be connected to valves or to other pipes and to complete the installed pipeline hydrostatic test, provide blind flanges with bolts, nuts, and gaskets.

3.05 INSTALLING GROOVED-END PIPING

Not Used

3.06 INSTALLATION OF STAINLESS-STEEL BOLTS AND NUTS

Not Used

END OF SECTION

SECTION 40 23 13.01

PROCESS VALVES AND APPURTENANCES

PART 1 - GENERAL

1.01 DESCRIPTION:

A. Provide process valves and appurtenances as indicated and in compliance with Contract Documents.

1. Provide sizes and capacities as indicated or specified.

1.02 REFERENCES:

A. American Society of Mechanical Engineers (ASME):

1. B1.20.7: Hose Coupling Screw Threads.

2. B16.1: Standard for Cast Iron Pipe Flanges and Flanged Fittings, 125 lb.

B. ASTM International (ASTM):

1. A48: Standard Specification for Gray Iron Castings.

2. A126: Standard Specification for Gray Iron Castings for Valves, Flanges and Pipe Fittings.

3. A536: Standard Specification for Ductile Iron Castings.

1.03 SUBMITTALS:

A. Submit the following in accordance with Section 01 33 00:

1. Data, regarding valve characteristics and performance including Cv.

2. Shop drawing data for accessory items.

3. Manufacturer's literature as needed to supplement certified data.

4. Operating and maintenance instructions and parts lists.

5. Listing of reference installations as specified with contact names and telephone numbers.

6. Valve shop test results.

7. Qualifications of field service technician.

8. Shop and Field inspections reports.

9. List of recommended spare parts other than those specified.

10. Recommendations for short- and long-term storage.

11. Special tools.

12. Shop and field-testing procedures and equipment to be used.

13. Number of service technician days provided and per diem field service rate.

14. Manufacturer’s product data and specifications for shop painting.

15. Provide a layout drawing, plan and section showing orientation of plug, gate, check, ball valves and actuators and nearest obstructions for each valve.

16. Manufacturer's product data and specifications for shop painting.

17. Provide a listing of the materials recommended for each service specified and indicated. Provide documentation showing compatibility with process fluid and service specified and indicated.

18. The latest ISO 9001 series certification or quality system plan.

19. Material Certification:

    a. Provide certification from the equipment manufacturer that the materials of construction specified are recommended and suitable for the service conditions specified and indicated. If materials other than those specified are proposed based on incompatibility with the service conditions, provide technical data and certification that the proposed materials are recommended and suitable for the service conditions specified and indicated including an installation list of a minimum of five (5) installations in operation for a minimum of five (5) years. Provide proposed materials at no additional cost to the Owner.

    b. Where materials are not specified, provide technical data and certification that the proposed materials are recommended and suitable for the service conditions specified and indicated.

B. A copy of this specification section with addenda and all referenced specification sections with addenda, with each paragraph check-marked to indicate specification compliance or marked to indicate requested deviations and clarifications from the specified requirements.

    1. If deviations and clarifications from the specifications are indicated, therefore requested by the Contractor, provide a detailed written justification for each deviation and clarification.

2. Failure to include a copy of the marked-up specification sections and or the detailed justifications for any requested deviation or clarification will result in submittal return without review until marked up specification and justification are resubmitted with the entire package.

1.04 QUALITY ASSURANCE:

A. Comply with the requirements specified.

B. Provide enclosures for the area classifications specified and indicated.

C. Contractor responsible for verifying outside diameter of pipe to be tapped.

D. Services of Manufacturer's Representative as stated and specified herein.

E. Manufacturer of valve shall have a minimum of five (5) operating installations with valves of the size specified and in the same service as specified operating for not less than five (5) years.

F. If equipment proposed is heavier, taller, different laying length or requires more operating space than specified and indicated; provide all structural, architectural, mechanical, electrical and plumbing revisions at no additional cost to the Owner.

1. If equipment is heavier than specified, the Contractor shall provide all hoisting equipment sized to maintain the minimum safety factor between the specified maximum equipment weight and the lifting capacity of the hoisting equipment indicated and specified.

1.05 DELIVERY, STORAGE AND HANDLING:

A. Transport and handle items in accordance with manufacturer's printed instructions.

B. Deliver products to the site in manufacturer's original sealed containers or other packing systems, complete with instructions for handling, storing, unpacking, protecting, and installing. Promptly inspect shipment to assure that products comply with requirements, quantities are correct, and items are undamaged.

C. All mechanical and electrical equipment and instruments shall be covered with canvas and stored in a weathertight building to prevent injury. Building shall be provided with adequate ventilation to prevent condensation. Maintain temperature and humidity within range required by manufacturer and to prevent condensation on the equipment being stored.

PART 2 - MATERIALS

2.01 ECCENTRIC PLUG VALVES:

A. Manufacturers:

1. DeZurik

2. Val-Matic

3. No substitutions.

B. Type: Non-lubricated, eccentric.

C. Body Working Pressure:

1. Cast Iron, ASTM A126 Class B or Ductile Iron, ASTM A536, Grade 64-45-12.

a. Valves 4-inch (100 mm) through 12-inch (300 mm): 175 psi (1220 kPa).

b. Valves 14-inch (350 mm) and larger: 150 psi (1050 kPa).

2. Carbon steel: 285 psi (1990 kPa).

D. Ends:

1. Flanged: ANSI B16.1 Class 125 pound for cast iron valves.

E. Valve Ports:

1. Provide rectangular ported valves, circular ports are not acceptable.

2. Valves 20-inch (500 mm) and smaller: Not less than 100 percent of pipe area.

F. Valve Seats:

1. Coat plug with seat material specified. Bolted systems are not acceptable.

a. Seat Material:

(1) Neoprene or Buna-N synthetic rubber.

2. Provide valves with one-piece coated plugs with mating seats of 90 percent, minimum, pure nickel 1/8-inch (3 mm) welded into the body of valves.

G. Upper and Lower Plug Journal Bearings:

1. Removable, permanently lubricated stainless steel bushings for valves 20-inch (500 mm) and smaller.

2. Bronze bearings with Type 316 stainless steel bushings for valves 24-inch (600 mm) and larger.

3. Provide grit seals for upper and lower plug shafts for all valves.

H. Stem Seals:

1. Adjustable multiple V-packing.

2. Replaceable and adjustable without valve disassembly.

3. Provide valves with two sets of packing rated for vacuum service for all pump suction isolation service and for services where a vacuum is specified and indicated.

I. Operators for Valves 4-inch (100 mm) and larger:

1. Manually Operators:

a. Gear operated with handwheels, levers are not acceptable.

b. Provide gear operators rated for bi-directional shutoff at the valve working pressure rating as specified herein.

c. Gear operators: Totally enclosed worm gear, traveling nut type is not acceptable. Provide permanent lubrication, watertight and dustproof, with adjustable open and closed stops and plug position indicator.

d. Provide all work gears designed and certified to withstand input loads up to 300-feet-pounds (407 Nm) minimum at the stops without damage.

e. Buried or submerged valves: Provide watertight gear operator with handwheel operated floor stand as shown. Gear operator to be totally enclosed and gasketed with Type 316 stainless steel hardware.

f. Chainwheels: Provide where required as specified herein.

g. Where indicated provide Type 316 stainless steel stem extension to operating floor elevation as shown and provide the bevel gear operator with a fabricated steel floor stand and handwheel.

2. Electric Motor Actuators.

J. Glass Lining – Sludge Service

1. All plug valves in contact with sludge shall be glass lined.

2. Provide glass lining fused to metal base by firing entire valve to temperature above 1,400-degree F (760 degrees C) and held at temperature for sufficient time to develop smooth vitreous lining which has molecular bond with metal.

3. Lining: Provide minimum of 0.008-inch (0.2 mm) thick and withstanding instantaneous thermal shock of 350-degree F (195 degrees C) differential, without crazing, blistering, or spalling. Lining free of pinholes which expose metal.

4. Provide lining hardness of 5 to 6 on the Mohs scale, and of density 2.5 to 3.0 grams per cubic centimeter.

5. Test in accordance with ASTM C283.

K. Shop Testing:

1. Provide all plug valves tested and certified bubble tight in both directions at the full rated working pressure as specified herein.

L. Shop Painting:

1. Provide epoxy painting as specified.

2. For valves installed in glass lined piping systems provided glass lined valves with epoxy paint coating as specified.

2.02 BUTTERFLY VALVES – LIQUID SERVICE (AWWA):
Not Used

2.03 BUTTERFLY VALVES:
Not Used

2.04 BALL VALVES – GENERAL SERVICE:
Not Used

2.05 CHAINWHEEL OPERATORS – STAINLESS STEEL:
Not Used

2.06 POSITION INDICATORS:

A. Manufacturer:

1. Trumbull Industries.

B. Provide position indicators installed on all multi-turn valves and quarter turn valves with gear boxes 3 inch (75 mm) and larger.

1. Type: Planetary gear design.

C. Materials:

1. Provide the sun gear, planet gear, ring gears and scale plate constructed of Delrin.

2. Housings of carbon steel or aluminum are not acceptable.

D. Position Indicator Design Features:

1. Provide the position indication to show the position of the valve, from fully open to fully closed, identified at ground level.

2. Movement of the indicating arrow must be visible through a window covering a minimum of 300 degrees of the circumference of the indicator.

3. Size of the characters and numerals: minimum 3/16-inch (5 mm).

4. Provide the top scale plate with markings representing the number of turns, contain the word “CLOSED”, and a directional arrow.

5. Provide permanently recessed, embossed or engraved markings in the scale plate. The use of adhesive labels is not acceptable.

6. Provide the “OPEN” line marked on a transparent polycarbonate window, field adjusted for the number of turns of each valve size.

7. Provide the position of the adjustable “OPEN” window secured to the top surface of the scale plate by the outside diameter of three Type 316 stainless button head cap screws.

8. Provide all adapters to secure the position indicator, for installation in either a valve box, floor box or wall bracket as indicated and required.

9. Provide the position indicator and adapter with matching flat sides to prevent rotation of the indicator during operation.

E. Exposed Valves:

1. Provide a Type 316 stainless steel extension stem connected to a 2 inch (50 mm) square nut on the valve and extend up through the position indicator, terminating in a 2 inch (50 mm) square nut, operable by a standard waterworks tee-handle wrench.

F. Buried Valves:

1. Provide the position indicator installed in a valve box within 6 inches (150 mm) of grade.

G. Valves Installed Inside a Structure:

1. Provide the position indicator installed in a floor box.

2. Where a floor is not directly over the valve and extension stem, support position indicators with a Type 316 stainless steel wall bracket mounted to a side wall.

3. When installed in a floor, provide the adapter with a bronze bushing to support and center the extension stem with the bronze bushing retained in the cast iron floor adapter by two Type 316 stainless steel screws and drilled to an inside diameter 1/16-inch (1.6 mm) larger than the outside diameter of the extension stem.

2.07 ELECTRIC MOTOR ACTUATORS:

2.08 SHOP PAINTING:

A. Internal ferrous surfaces of valves shall be glass lined when in contact with sludge. External ferrous surfaces of valves shall be coated in accordance with Section 09 90 00.

B. Process Valve Color: Red.

PART 3 - EXECUTION

3.01 INSTALLATION:

A. Prior to installation, protect stored valves and appurtenances from damage due to exposure to sunlight, heat, dirt, debris, freezing and thawing, vandalism, etc.

B. Clean all debris, dirt, gravel, etc., from inside of piping before placing valves in place.

C. Erect and support valves in respective positions free from distortion and strain on appurtenances during handling and installation. Inspect material for defects in workmanship and material. Clean out debris and foreign material from valve openings and seats, test operating mechanisms to check functioning, and check nuts and bolts for tightness. Repair, valves and other equipment which do not operate easily or are otherwise defective at no additional cost to the Owner.

D. Set plumb and support valves in conformance with instructions of manufacturer. Shim valves mounted on face of concrete vertically and grout in place. Install valves in control piping for access.

E. Provide bolted split sleeve coupling or flexible type grooved coupling on downstream side of buried valves to assist in valve removal.

F. Where indicated provide Type 316 stainless steel stem extension to operating floor elevation as shown and provide the bevel gear operator with a fabricated steel floorstand and handwheel.

3.02 PLUG VALVES:

A. Install valves in horizontal piping with shaft horizontal such that in open position, plug is located in upper part of valve body. Orient valves so that in closed position, flow is against the face of the plug.

3.03 FLOORSTAND OPERATORS AND STEM GUIDES:

A. Set floorstand operators and stem guides so stems run smoothly in true alignment. Anchor guides to walls. Check distances from centerlines of gates to operating level or base of floorstand and adjust if to suit actual conditions of installation.

3.04 FIELD TESTING:

A. Pressure test valves with pipeline pressure testing as specified in 40 23 19.05.

B. Test functions of each valve.

C. Make all adjustments necessary to place valves in specified working order at time of above tests.

D. Remove all replace valves and appurtenances at no additional cost to the Owner with equipment that will meet all requirements specified and indicated if unable to demonstrate to the satisfaction of the Engineer that valves will perform the service specified, indicated and as submitted and accepted.

3.05 FIELD TOUCH-UP PAINTING:

A. After installation and accepted testing by the Engineer, apply touch-up paint to all scratched, abraded and damaged shop painted surfaces. Coating type and color shall match shop painting.

END OF SECTION

SECTION 40 23 19.04

DUCTILE IRON PIPE AND FITTINGS

PART 1 - GENERAL

1.01 DESCRIPTION:

A. Provide and test ductile iron pipe, fittings and appurtenances as indicated and in compliance with Contract Documents.

B. Options:

1. For buried exterior pipelines provide push-on joint pipe.

   a. Provide restrained push-on pipe as specified

   b. Provide either restrained push-on joint fittings as specified and indicated or provide mechanical joint fittings with restraint system as specified herein

2. For piping exposed in buildings and galleries, provide flanged or rigid-joint, as indicated and specified.

3. Cast iron pipe and fittings are not acceptable.

1.02 REFERENCES

A. American Society of Mechanical Engineers (AMSE):

1. B16.1: Cast-Iron Pipe Flanges and Flanged Fittings, Class 25, 125, 250, and 800.

2. B16.21: Nonmetallic Flat Gaskets for Pipe Flanges.

3. B16.42: Ductile Iron Pipe Flanges and Flanged Fittings.

4. B31.1: Power Piping.

B. ASTM International (ASTM):

1. A240: Specification for Heat Resisting Chromium and Chromium-Nickel Stainless Steel Plate, Sheet and Strip for Pressure Vessels.

2. A307: Carbon Steel Bolts and Studs, 60,000 psi Tensile.

3. A380: Standard Practice for Cleaning, Descaling, and Passivation of Stainless Steel Parts, Equipment and Systems.

4. A530: Specification for General Requirements for Specialized Carbon and Alloy Steel Pipe.

5. A774: Specification for As-Welded Wrought Austenitic Stainless Steel Fittings for General Corrosive Service at Low and Moderate Temperatures.

6. A778: Specification for Welded, Unannealed Austenitic Stainless Steel Tubular Products.

C. American Water Works Association (AWWA):

1. A21.10: Ductile-Iron and Gray-Iron Fittings, 3 in. through 48 in., for Water and Other Liquids.

2. A21.11: Rubber-Gasket Joints for Ductile-Iron and Gray-Iron Pressure Pipe Fittings.

3. A21.15: Flanged Ductile-Iron Pipe with Threaded Flanges.

4. A21.50: Thickness Design of Ductile-Iron Pipe.

5. A21.51: Ductile-Iron Pipe, Centrifugally Cast in Metal Molds, or Sand-Lined Molds, for Water or Other Liquids.

6. A21.53: Ductile-Iron Compact Fittings, 3-in through 16-in. for Water and Other Liquids.

D. Fluid Sealing Association: Technical Handbook.

1.03 SUBMITTALS:

A. Submit the following in accordance with Section 01 33 00:

1. Pipe manufacturer’s technical specification and product data.

2. Certified shop and erection drawings. Contractor shall submit electronic files of the piping layout including the following.

a. Pipe layouts in full detail.

b. Location of hangers and supports.

c. Location and type of anchors.

d. Location of couplings and expansion joints.

e. 1/2-inch = 1 foot-0 inch scale details of all wall penetrations and special fittings.

f. Schedules of pipe, fittings, special castings, couplings, expansion joints and other appurtenances.

3. Certificates: Sworn certificates in duplicate showing compliance with material used and shop tests performed.

4. Catalog cuts and technical data for expansion joints, couplings, gaskets, pipe supports and other accessories.

5. Brochures and technical data on coatings and linings and proposed method of application.

6. Manufacturer's descriptive literature and technical data on insulation and proposed method of installation.

B. Material Certification:

1. Provide certification from the pipe and fittings manufacturer that the materials of construction specified are recommended and designed for the service conditions specified and indicated. If materials other than those specified are proposed based on incompatibility with the service conditions, provide technical data and certification that the proposed materials are recommended and designed for the service conditions specified and indicated including an installation list of a minimum of five (5) installations in operation for a minimum of five (5) years. Provide proposed materials at no additional cost to the Owner.

2. Where materials are not specified, provide technical data and certification that the proposed materials are recommended and designed for the service conditions specified and indicated.

C. A copy of the contract mechanical process, civil and structural drawings, with addenda that are applicable to the equipment specified in this section, marked to show all changes necessary for the equipment proposed for this specification section. If no changes are required, mark all drawings with "No changes required" or provide a statement that no changes are required.

1. Failure to include all drawings or a statement applicable to the equipment specified in this section will result in submittal return without review until a complete package is submitted.

2. A copy of this specification section with addenda and all referenced specification sections with addenda, with each paragraph check-marked to indicate specification compliance or marked and indexed to indicate requested deviations and clarifications from the specified requirements.

a. If deviations and clarifications from the specifications are indicated, therefore requested by the Contractor, provide a detailed written justification for each deviation and clarification.

b. Failure to include a copy of the marked-up specification sections and or the detailed justifications for any requested deviation or clarification will result in submittal return without review until marked up specifications and justifications are submitted in a complete package.

1.04 QUALITY ASSURANCE:

A. Provide manufacturer's certification in writing, that materials meet or exceed minimum requirements as specified.

B. Inspect and test at foundry per applicable standard specifications.

C. Owner reserves right to inspect and test by independent service at manufacturer’s plant or elsewhere at his own expense.

D. Visually inspect before installation.

E. Job Conditions:

1. Coordinate dimensions and drillings of flanges with flanges for valves, pumps and equipment to be installed in the piping systems.

1.05 DELIVERY, STORAGE AND HANDLING:

A. During loading, transportation and unloading, prevent damage to pipes and fittings. Load and unload each pipe under control at all times. Under no circumstances will a dropped pipe be used unless inspected and accepted by Engineer. Place skids or blocks under each pipe in the shop and securely wedge pipe during transportation.

PART 2 - PRODUCTS

2.01 PIPE:

A. Ductile Iron:

1. Design conforming to AWWA A21.50.

2. Manufacture conforming to AWWA A21.15 or AWWA A21.51.

3. Pressure Class, unless otherwise indicated or specified:

a. Minimum Pressure Class, 4-inches through 12-inches: 350

b. 14 inches through 64 inches: 250

2.02 PIPE FOR USE WITH COUPLINGS:

A. As specified above except ends shall be plain.

B. With bolted split sleeve couplings, ends cast or machined at right angles to axis.

2.03 FITTINGS:

A. Provide fittings conforming to AWWA A21.10 or AWWA A21.53, at least Class 150 and match piping class.

B. Provide bell push-on or mechanical-joint fittings where indicated or specified.

C. Face and drill flanged fittings conforming to AWWA A21.10 except special drilling or tapping for correct alignment and bolting.

D. If flanged fittings are not available under AWWA A21.10 provide fittings conforming to ASME B16.1 in 125 lb. pressure class.

E. Provide standard base fittings where indicated.

2.04 NONSTANDARD FITTINGS:

A. Acceptable design:

1. Same diameter and thickness as standard fittings.

2. Manufactured to meet requirements of same specifications as standard fittings except for laying length and types of ends.

2.05 WALL CASTINGS:
Not Used

2.06 ADAPTERS:
Not Used

2.07 JOINTS:
Not Used

2.08 MECHANICAL JOINT FITTINGS – RESTRAINT SYSTEM:
Not Used

2.09 FLANGE ADAPTORS:

A. Provide restrained flange adaptors for pipe consisting of multiple individual gripping wedges incorporated into a follower gland meeting requirements of AWWA A21.10.

1. Provide actuation of the gripping wedges ensured with torque limiting twist off nuts.

2. Provide restraint devices Listed by Underwriters Laboratories (3-inch through 12 inch size) and Designed by Factory Mutual (4-inch through 12-inch size).

3. Gland body, wedges and wedge actuating components must be domestic manufactured in the USA.

B. Joint Deflection capability:

1. 3-inch through 8-inch: 5 degrees

C. Provide flange adaptor to maintain seal with and 0.6 inch gap between end of pipe and mating flange

D. Working Pressure Rating:

1. 16-inch and Smaller: 350 psi

2. Minimum safety factor: 2 to 1.

E. Materials:

1. Gland body, wedges and wedge actuating components: Grade 65-45-12 ductile iron in accordance with ASTM A536.

2. Ductile iron gripping wedges: Heat treated, 370 to 470 BHN.

3. Provide three (3) test bars incrementally poured per production shift as per Underwriter's Laboratory (U.L.) specifications and ASTM A536. Testing for tensile, yield and elongation in accordance with ASTM E8.

4. Provide chemical and nodularity tests performed as recommended by the Ductile Iron Society, on a per ladle basis.

5. Provide an identification number consisting of year, day, plant and shift (YYDDD)(plant designation)(Shift number) cast into each gland body.

6. Record all physical and chemical test results such that they can be accessed via the identification number on the casting. Provide the Material Traceability Records (MTRs) available, in hard copy.

7. Provide coating for restraint devices consisting of the following:

a. Process all wedge assemblies and related parts through a phosphate wash, rinse and drying operation prior to coating application.

b. Coating: A minimum of two coats of liquid thermoset epoxy coating with heat cure to follow each coat.

c. Surface pretreat all casting bodies with a phosphate wash, rinse and sealer before drying. The coating shall be electrostatically applied and heat cured. Coating: Polyester based powder to provide corrosion, impact and UV resistance.

d. Coating system: MEGA-BOND by EBAA Iron, Inc.

F. Manufacturer:

1. EBAA Iron MEGAFLANGE Series 2100

2.10 FLEXIBLE CONNECTIONS:

A. Use as specified or indicated:

1. Bolted split sleeve couplings

2. Expansion joints

2.11 PIPE EXTERIOR COATING:

A. Exterior of pipe and fittings without sludge contact: Clean and apply one shop coat of 3 to 5 mil DFT of moisture cured urethane. Field coat as specified in 09 90 00.

B. Exterior of pipe and fittings with sludge contact: Coal tar epoxy coating shall be applied in accordance with coating manufacturer's recommendations and as specified. Refer to Section 09 90 00.

C. Outside surfaces of castings to be encased in concrete: No coating.

D. Machined surfaces cleaned and coated with rust-preventative compound at shop.

E. Exterior of buried pipe and fittings: Standard bituminous asphaltic coating conforming to ANSI Standard ***and*** 200 micron (minimum) polyethylene tube encasement.

2.12 PIPE INTERIOR - GLASS LINING:

A. Glass Lining: Vitreous material that is smooth, continuous and formulated to prevent the adherence of grease, scum and crystalline metal salt deposits in sludge, scum and related process piping systems in wastewater and sewage treatment systems.

B. Provide lining consisting of two coats, separately applied and separately fired at a maturing temperature of approximately 1400 degrees F creating a molecular bond with the base metal and a total minimum lining thickness of 8-10 mils.

C. Lining minimum hardness: 5-6 on the MOHS scale.

D. Provide lining capable of withstanding an instantaneous thermal shock of 350 degrees F differential without crazing, blistering or spalling.

E. Provide lining capable of withstanding a strain of 0.001 inch/inch, the yield point of the base metal, without damage to the glass lining.

F. Provide lining resistant to corrosion of between PH 3 to 10.

G. Testing Procedure: In accordance with industry standards "MP-9.2 .1-Industry Continuity Test Procedures-Porcelain Enamel (Glass) Lined Pipe and Fittings".

1. Acceptance Criteria:

Pipe Diameter	Maximum Pinholes/Fitting	Maximum Pinholes/ 20 Foot Pipe Length
8-inches and Smaller	3 to 5	10 to 12

H. The above criteria represent non-visible pinholes detectable by low voltage spark test only. Any pinholes that are visible to the naked eye and expose the base metal are not acceptable.

I. Factory test all pipe and fittings, with certified copies of the test results accompanying each shipment.

J. Provide documents identifying each individual item by mark number and description, the Quality Control Sequence Number, date tested, inspector, and the number of pinholes detected per item.

K. Fabricators:

1. Custom-Fab, or equal.

2.13 GASKETS, BOLTS, AND NUTS:

A. Provide ring or full face synthetic rubber gaskets for flanged joints and neoprene faced phenolic for insulating gaskets in accordance with AWWA A21.11 and ASME B16.21.

B. Make flanged joints with:

1. Bolts.

2. Bolt studs with nut on each end.

3. Studs with nuts where flange is tapped.

4. Plastic bolt sleeves and washers for insulating joints.

C. Number and size of bolts conform to same ANS as flanges.

D. Provide Type 316 stainless steel bolts, washers and nuts for all services:

2.14 ELECTRICAL CONDUCTORS:

A. Provide 1/16-inch by 3/4-inch copper strip conductors for joints indicated to have electrical continuity.

B. Weld terminal strips to bell-ends and spigot ends of pipe in the foundry. Provide jumper strips and silicon bronze bolts and nuts to complete the connections.

C. If field cutting of pipe is necessary, weld terminal strip to cut spigot end using thermit weld or other designed process.

PART 3 - EXECUTION

3.01 HANDLING AND CUTTING:

A. Mark pipe and fittings "Rejected" and remove from site when cracked or has received a severe blow.

B. If permitted, cut on sound barrel at a point at least 12 inch from visible limit of crack, at Contractor's expense.

C. Machine cut with milling type cutters, knives, or saws. Snap cutters, torch, or hammer and chisel NOT ALLOWED. Examine for possible cracks.

D. Chamfer cut ends if used for push-on joints.

E. Do not cut glass lined pipes.

3.02 INSTALLATION:

A. Visually inspect before installation.

B. Ensure pipelines parallel to building walls wherever possible. Install piping to accurate lines and grades. Where temporary supports are used, ensure rigidity to prevent shifting or distortion of pipe. Provide for expansion where necessary.

C. Pitch piping toward low points. Provide for draining low points.

D. Before assembly, remove dirt and chips from inside pipe and fittings.

E. Piping Support: Provide in accordance with drawings.

F. Pipe and Fittings:

1. Remove and replace defective pieces.

2. Clear of all debris and dirt before installing and keep clean until accepted.

3. Lay accurately to lines and grades indicated or required. Provide accurate alignment, both horizontally and vertically.

4. Provide firm bearing along entire length of buried pipelines.

5. Do not allow deflection of alignment at joints to exceed permissible deflection as specified below:

PIPE DEFLECTION ALLOWANCES

Maximum permissible deflection, inches*		
Size of pipe, inches	Push-on joint	Mechanical joint
4	19	31
6	19	27
8	19	20
* Maximum permissible deflection for 20-feet lengths; for other lengths in proportion of such lengths to 20-feet.		

a. For push-on joint or similar pipe, clean bell of excess tar or other obstruction and wipe out before inserting next pipe spigot. Shove new pipe into place until properly seated and hold securely until joint completed.

b. Set castings to be encased in concrete accurately with bolt holes, if any, carefully aligned. Clean off rust and scale before setting.

G. Temporary Plugs: When pipe laying not in progress, close open ends of pipe with temporary watertight plugs. If water in trench, do not remove plug until danger of water entering pipe passed.

H. Appurtenances: Set valves, fittings and appurtenances as indicated.

3.03 JOINTS AND COUPLINGS:

A. Push-on Joints:

1. Insert gasket into groove bell. Apply thin film of nontoxic gasket lubricant over inner surface of gasket in contact with spigot end.

2. Insert chamfered end into gasket. Force pipe past it until it seats against socket bottom.

B. Bolted Joints:

1. Remove rust-preventive coatings from machined surfaces.

2. Clean pipe ends, sockets, sleeves, housings, and gaskets and smooth all burrs and other defects.

3. Use torque wrench to tighten to correct range of torque not to exceed values specified below:

TORQUE RANGE VALUES		
Nominal pipe size, in	**Bolt diameter, in**	**Range of torque, ft-lb**
3	5/8	40-60
4-24, incl.	3/4	75-90

C. Flanged Joint:

1. Make up tight.

2. Do not put strain on nozzles, valves, and other equipment.

3. Bolt threads must fully engage the nuts. At a minimum the bolt must be flush with the nut and no more than 1/2-inch excess thread protruding from the nut.

D. Mechanical Joints:

1. Wire brush surfaces in contact with gasket and clean gasket.

2. Lubricate gasket, bell, and spigot with soapy water.

3. Slip gland and gasket over spigot, and insert spigot into bell until seated.

4. Seat gasket and press gland firmly against gasket.

5. After bolts inserted and nuts made finger-tight, tighten diametrically opposite nuts progressively and uniformly around joint by torque wrench. Torque bolts to values specified above.

E. Electrical Conductors:

1. Install pipes so terminal strips are aligned.

2. Install jumper strips and tighten bolts.

3.04 FIELD TESTING:

A. Clean of all dirt, dust, oil, grease and other foreign material, before conducting pressure and leakage tests.

B. Pressure and Leakage Tests:

1. Conduct combined pressure and leakage test:

a. Initially on pipeline between first two valves, maximum length 1/4 mile, and within three days of completion.

b. Afterwards on completed sections of maximum length 1/2 mile.

c. Isolated sections upon completion.

2. Conduct combined pressure and leakage test in pipelines.

3. Furnish and install temporary testing plugs or caps; pressure pumps, pipe connections, meters, gages, equipment, and labor.

4. Test when desired and comply with specifications.

5. Test pipelines in excavation or embedded in concrete before backfill or placing of concrete and test exposed piping before field painting.

6. Fill section of pipe with water and expel air. If hydrants or blow offs are not available at high points for releasing air, make necessary taps and plug after test completion.

7. Maintain section full of water for 24 hours before conducting combined pressure and leakage test.

8. Conduct pressure and leakage test consisting of first raising water pressure (based on elevation of lowest point of section under test and corrected to gage location) to pressure in psi numerically equal to pipe pressure rating, but not more than 150 psi.

9. Maintain pressure and make leakage test by metering water flow into pipe. Acceptable results:

    a. Average leakage during test: less than 10 gallons per inch of diameter per 24 hours per mile.

    b. No visible leakage in joints.

10. If unable to achieve and maintain specified pressure for one hour with no additional pumping, section fails test.

11. If section fails pressure and leakage test, locate, uncover, and repair or replace defective pipe, fitting, or joint, at no additional expense and without time extension. Conduct additional tests and repairs until section passes test.

12. Modify test procedure only if permitted by Engineer.

3.05 FIELD PAINTING:

A. Paint to match existing ductile iron pipe color with the coating system specified in Section 09 90 00.

END OF SECTION

SECTION 40 23 19.05

PROCESS PIPING AND APPURTENANCES

PART 1 - GENERAL

1.01 DESCRIPTION:

A. Provide and test process piping and appurtenances as indicated and in compliance with Contract Documents.

1.02 REFERENCES:

A. American Society of Mechanical Engineers (ASME):

1. B31.1: Power Piping

B. ASTM International (ASTM):

1. A36: Standard Specification for Carbon Structural Steel

2. A53: Standard Specification for Pipe, Steel, Black and Hot-Dipped, Zinc-Coated, Welded and Seamless

3. A105: Standard Specification for Carbon Steel Forgings for Piping Applications

4. C177: Standard Test Method for Steady-State Heat Flux Measurements and Thermal Transmission Properties by Means of the Guarded-Hot-Plate Apparatus

5. C1136: Standard Specification for Flexible, Low Permeance Vapor Retarders for Thermal Insulation

6. D256: Standard Test Methods for Determining the Izod Pendulum Impact Resistance of Plastics

7. D638: Standard Test Method for Tensile Properties of Plastics

8. D696: Standard Test Method for Coefficient of Linear Thermal Expansion of Plastics Between-30 Degree C and 30 Degree C with a Vitreous Silica Dilatometer

9. D790: Standard Test Methods for Flexural Properties of Unreinforced and Reinforced Plastics and Electrical Insulating Materials

10. D792: Standard Test Methods for Density and Specific Gravity (Relative Density) of Plastics by Displacement

11. D1784: Standard Specification for Rigid Poly(Vinyl Chloride) (PVC) Compounds and Chlorinated Poly (Vinyl Chloride) (CPVC) Compounds

12. D2000: Rubber Products in Automotive Applications

13. E84: Standard Test Method for Surface Burning Characteristics of Building Materials

C. American Welding Society (AWS):

1. B3.0: Welding Procedure and Performance Qualification

D. American Water Works Association (AWWA):

1. C213: Fusion-Bonded Epoxy Coating for the Interior and Exterior of Steel Water Pipelines

2. C219: Bolted, Sleeve-Type Couplings for Plain-End Pipe

E. Expansion Joint Manufacturers Association Standards.

F. Fluid Sealing Association - Technical Handbook.

G. Manufacturer's Standardization Society (MSS):

1. SP-69: Pipe Hangers and Supports - Selection and Application

1.03 SUBMITTALS:

A. Submit the following in accordance with Section 01 33 00:

1. Submit manufacturer's certificates of conformance.

2. Submit certified copies of test reports.

3. Piping layouts in full detail.

4. Location of pipe hangers and supports.

5. Large scale details of wall penetrations and fabricated fittings.

6. Schedules of all pipe, fittings, special castings, flexible connectors, adapters, couplings, expansion joints, and other appurtenances.

7. Reports as required for welding certifications per ASME B31.1 Paragraph 127.6.

8. Catalog cuts of joints, couplings, harnesses, expansion joints, gaskets, fasteners and other accessories.

B. Material Certification:

a. Provide certification from the piping and equipment manufacturers that the materials of construction specified are recommended and suitable for the service conditions specified and as indicated. If materials other than those specified are proposed based on incompatibility with the service conditions, provide technical data and certification that the proposed materials are recommended and suitable for the service conditions specified, and indicated including an installation list of a minimum of five (5) installations in operation for a minimum of five (5) years. Provide proposed materials at no additional cost to the Owner.

b. Where materials are not specified, provide technical data and certification that the proposed materials are recommended and suitable for the service conditions specified and indicated.

C. A copy of the contract mechanical process, civil, structural, electrical and instrumentation drawings, with addenda that are applicable to the equipment specified in this section, marked to show all changes necessary for the equipment proposed for this specification section. If no changes are required, mark all drawings with "No changes required".

1. Failure to include all drawings applicable to the equipment specified in this section will result in submittal return without review.

D. A copy of this specification section with addenda and all referenced specification sections with addenda, with each paragraph check-marked to indicate specification compliance or marked to indicate requested deviations and clarifications from the specified requirements.

1. If deviations and clarifications from the specifications are indicated, therefore requested by the Contractor, provide a detailed written justification for each deviation and clarification.

2. Failure to include a copy of the marked-up specification sections and or the detailed justifications for any requested deviation or clarification will result in submittal return without review until marked up specification and justification are resubmitted with the entire package.

1.04 QUALITY ASSURANCE:

A. Provide manufacturer's certification in writing, that materials meet or exceed minimum requirements as specified.

B. Inspect and test at foundry according to applicable standard specifications.

C. Owner reserves right to inspect and test by independent service at manufacturer's plant or elsewhere at his own expense.

D. Visually inspect before installation.

E. Job Conditions:

1. Coordinate dimensions and drillings of flanges with flanges for valves, pumps and equipment to be installed in the piping systems.

F. Welder Qualifications:

1. Qualify and certify welding procedures, welders, and operators in accordance with ANSI B31.1, for shop and project site welding of piping work.

2. Qualification for welders: Welding shall be performed by welders holding current certification for the welding procedures in use.

3. Visually inspect welding while the operators are making the welds and again after the work is completed. After the welding is completed, hand or power wire brush welds and clean them before the inspector makes the check inspection. Inspect welds for defects exceeding tolerances allowed by code under which the weld was made. Repair all defects exceeding tolerance.

G. Job Conditions:

1. Coordinate dimensions and drillings of flanges with flanges for valves, pumps, and other equipment to be installed in piping system.

1.05 DELIVERY, STORAGE AND HANDLING:

A. During loading, transportation and unloading, prevent damage to pipes and coatings. Load and unload each pipe under control at all times. Under no circumstances will a dropped pipe be used unless inspected and accepted by the Engineer. Place skids or blocks under each pipe in the shop and securely wedge pipe during transportation to protect pipe, lining, and coating.

PART 2 - PRODUCTS

2.01 DUCTILE IRON PIPE AND FITTINGS:

A. Provide in accordance with Section 40 23 19.04.

2.02 STAINLESS STEEL PIPE AND FITTINGS 2-1/2 INCH (65MM) AND LARGER:
Not Used

2.03 STEEL PIPE AND FITTINGS 10-INCH (250 MM) AND SMALLER:
Not Used

2.04 PRESSURE GAUGES:
Not Used

2.05 COUPLINGS-SLEEVE TYPE:
Not Used

2.06 EXPANSION JOINTS-ELASTOMERIC FLEXIBLE CONNECTION:

Not Used

2.07 HOSE, HOSE FITTINGS AND ACCESSORIES:

A. Hose Manufacturers:

1. Goodrich, HPD Industries
2. Goodyear
3. United Rubber Supply
4. Goodall

B. Hose: 1-inch:

1. Provide 4-ply rubber-lined and rubber-covered water hose for 150 psi working pressure.
2. Nozzle:
    a. Shatter proof and UV resistant Lexan constant flow nozzle with bumper.

C. Hose Reels:

1. Type 316 stainless steel, mill finish.
2. Heavy duty square tubing frame.
3. Spring rewind with declutching arbor.
4. Stainless steel ball bearing swivel joint.
5. 1-inch female NPT.
6. 50 feet of hose.
7. Provide a flexible connector between the inlet pipe and inlet swivel joint.
8. Manufacturer: Hannay Model SS800 or acceptable equivalent product.

2.08 WALL AND FLOOR SLEEVES:

A. Materials:

1. Floor Sleeves:
    a. Schedule 40 Galvanized steel ASTM A53 GRB

2. Wall Sleeves Between a Dry Area and a Wet Area (Tank, Channel etc)

   a. Schedule 40 Type 316L stainless steel

3. Wall Sleeves Between Dry Area or Between Dry Area and Ground

   a. Schedule 40 Galvanized steel ASTM A53 GRB

B. Water Stops: Provide water stops welded on both sides. Provide water stops 1/4-inch thick and 2-inch high and centered on the wall thickness.

C. Provide modular, mechanical type seals, consisting of inter-locking synthetic rubber links shaped to continuously fill the annular space between the pipe and the wall opening.

D. Provide the elastomeric elements sized and selected per manufacturer's recommendations and have the following properties as designated by ASTM. Coloration shall be throughout elastomer for positive field inspection. Each link shall have a permanent identification of the size and manufacturer's name molded into it.

E. Temperature Range: -40 to +250 degrees F.

1. Material: EPDM, ATSM D2000 M3 BA510

2. Color: Black

F. Modular seal pressure plates: Molded of glass reinforced Nylon Polymer with the following properties:

1. Izod Impact – Notched: 2.05ft-lb/in. per ASTM D256

2. Flexural Strength @ Yield: 30,750 psi per ASTM D790

3. Flexural Modulus: 1,124,000 psi per ASTM D790

4. Elongation Break: 11.07 percent per ASTM D638

5. Specific Gravity: 1.38 per ASTM D792

G. Hardware: Type 316 stainless steel.

2.09 TRANSITION COUPLINGS:

Not Used

2.10 DISMANTLING JOINTS:

A. Materials:

1. Flanged Spool: AWWA Class D steel ring flange compatible with ANSI class 125 and 150 bolt circles. Provide pipe of ASTM A36 plate 1 percent cold expanded to size.

2. End Ring and Body: ASTM A36 steel

3. Gaskets: ASTM 2000 Virgin NBR suitable for wastewater service

4. Bolts and Nuts: Type 316 stainless steel

5. Tie Rods: Type 316 stainless steel

B. Assembly Tolerance: 3 inches

C. Coating: Fusion bonded epoxy, NSF 61 certified

D. Pressure Rating: 150 psi working pressure

E. Manufacturers

1. Romac

2. Viking Johnson

2.11 INSULATION:

Not Used

2.12 HEAT TRACE:

Not Used

PART 3 - EXECUTION

3.01 HANDLING

A. Mark pipe and fittings "Rejected" and remove from site when cracked or has received a severe blow.

B. If permitted, cut on sound barrel at a point at least 12 inch from visible limit of crack, at Contractor's expense.

C. Machine cut with milling type cutters, knives, or saws. Snap cutters, torch, or hammer and chisel NOT ALLOWED. Examine for possible cracks.

D. Chamfer cut ends if used for push-on joints.

E. Do not cut glass lined pipes.

3.02 INSTALLATION OF PIPE:

A. Visually inspect before installation.

B. Install pipelines parallel to building walls wherever possible. Install piping to lines and grades indicated and support. Where temporary supports are used, provide temporary supports to prevent shifting or distortion of pipe. Provide for expansion.

C. Slope piping toward low points and provide for draining at low points.

D. Before assembly, remove debris from inside pipes and fittings.

E. Before flanges pieces are assembled, remove rust resistant coating from machined surfaces, clean gaskets and smooth burrs. Make up flanged joints tight, and prevent strain upon valves or other pieces of equipment.

1. Bolt threads must fully engage the nuts. At a minimum the bolt must be flush with the nut and no more than 1/2-inch (15 mm) excess thread protruding from the nut.

F. Install tierods, pipe clamps or bridles when sleeve type couplings or fittings are used in piping system as indicated, and at changes in direction or other places to prevent joints from pulling apart under pressures indicated in the Process Pipe Schedule.

G. Examine pieces for damage. Do not install pieces that are damaged according to Engineer. If any damaged piece should be discovered after having been installed, remove and replace with a sound piece at no additional cost to the Authority.

H. Handle pipe with equipment such as nylon slings and padded skids, designed to prevent damage to the coating. Repair abrasions and injuries to the coating prior to the application of insulation or prior to the application of final field coating.

I. Support piping laid in trenches in trench on bed of selected backfill material which maintains desired line and grade.

J. Use dielectric bushings or unions when ferrous pipes join nonferrous pipes carrying liquid either underground or elsewhere.

K. Welding in accordance with AN Standard B31 and AWS B3.0.

3.03 WALL SLEEVE SEALS:

A. Expand rubber against pipe and sleeve by tightening bolts when assembled around pipe and inserted in wall.

3.04 TEMPORARY PLUGS:

A. Close open ends of pipe with temporary plugs or caps when pipe installation is not in progress. Use watertight plugs for exterior, buried piping and if water or debris is in trench when work is

resumed, do not remove until adequate provision has been made to prevent any water or debris entering pipe even if it necessitates dewatering trench.

3.05 PHYSICAL CHECKOUT, FIELD AND FUNCTIONAL TESTING:

A. Clean dirt, dust, oil, grease and other foreign material, before pressure and leakage tests.

B. Water for testing provided by the Contractor.

C. Pressure and Leakage Tests (liquid):

1. Provide temporary testing plugs or caps; pressure pumps, pipe connections, meters, gages, equipment, and labor.

2. Test pipelines in sections of acceptable length.

3. Fill section of pipe with water and expel air.

4. Pressure and leakage test consists of first raising pressure (based on elevation of lowest point of section under test and corrected to gage location) to pressure in psi numerically equal to test pressures indicated in the Pipeline Schedule herein.

5. No visible leakage in joint is acceptable.

6. If unable to achieve and maintain specified pressure for one hour with no additional pumping, section has failed to pass test.

7. If section fails pressure and/or leakage test, locate, uncover, and repair or replace defective pipe, fitting, or joint, and conduct additional tests and repairs until section passes test at no additional cost and without any time extensions.

D. Pressure and Leakage Tests (gas):

1. Cap and fill piping with oil-free, dry air, or gaseous nitrogen to pressure of 50 psig above system operating pressure, but not less than 150 psig. Isolate test source and let stand for 4 hours to equalize temperature. Refill system, if required, to test pressure and hold pressure for 2 hours with no drop in pressure.

a. Repair leaks and defects with new materials and retest system until satisfactory results are obtained.

E. Make piping connections to equipment with pipe in a free supported state and without application of vertical or horizontal forces to align piping with the equipment flanges.

F. Do not cover joints in underground piping with backfill material until piping has successfully passed pressure test.

G. Test pressure and medium as indicated in Pipeline Schedule herein.

H. Repair faulty joints even to extent of disassembling and remaking joint, remove defective pipe and fittings and replace in manner satisfactory to the Owner.

3.06 FIELD TOUCH-UP PAINTING

A. After installation and accepted testing by the Engineer, apply touch-up paint to all scratched, abraided and damaged shop painted surfaces. Coating type and color shall match shop painting.

	PIPELINE SCHEDULE							
ABBREV	**Service**	**Material**	**Test Presure (PSI)**	**Test Medium**	**Insulation Thickness (in.)**	**Pipe Color**	**ID Color**	**Comments**
	Pipe Sludge Feed	Ductile Iron	100 PSI	Water		Red, Match Existing	Yellow	Use Pipe Tags/Labels In Addition To ID Color
	Overflow Drain	PVC	N/A	Water		Beige, Match Existing	Yellow	Use Pipe Tags/Labels In Addition To ID Color

END OF SECTION

SECTION 40 50 00

PROCESS CONTROL AND INSTRUMENTATION SYSTEM (PCIS) GENERAL REQUIREMENTS

PART 1- GENERAL

1.01 DESCRIPTION:

A. This section of the specifications includes materials, testing, and installation of process control and instrumentation systems as specified herein and indicated on the drawings.

B. These specifications shall not be interpreted as permission or direction to violate any governing code or ordinance. Equipment, materials, and workmanship shall comply with the latest revisions of the following codes and standards:

1. Instrumentation: ISA - The International Society of Automation.

2. Wiring: National Electrical Code (NEC), ISA S5.3 and S5.4.

3. Control Logic: NFPA 79.

4. Piping: ANSI B31.3 (instrumentation piping).

1.02 RELATED WORK SPECIFIED ELSEWHERE:

A. 40 50 20 – INSTRUMENTATION EQUIPMENT

1.03 SCOPE OF WORK

A. The work involves furnishing all hardware, installation, labor, material, equipment, and engineering in strict compliance with the contract documents. Programming changes to existing distributed control system are by Owner.

1.04 SUBMITTALS:

A. Submit in accordance with Section 01 33 00.

B. Submit these drawings and data as a complete package at the same time.

C. Provide manufacturers cut sheets and manuals for all hardware to be provided.

D. Provide an Instrument Index.

E. Provide ISA type instrumentation data sheets for each component, together with a technical product brochure or bulletin. The data sheets, as a minimum, shall show:

1. Instrument tag designation.

2. Component name.

3. Manufacturer's model number.

4. Calibrated range.

5. Instrument location.

6. Input and output characteristics.

7. Scale range and units (if any) and multiplier (if any).

8. Requirements for electrical power.

F. Group the data sheets together in the submittal by type. Provide individual data sheets for each instrument with one brochure or bulletin to cover all identical uses of that component.

G. Operation, Maintenance, and Repair Manuals (OMM):

1. The organization of the initial submittal required above shall be compatible to eventual inclusion as one volume of the operation, maintenance, and repair manuals.

2. The complete OMM shall contain the following:

a. All the information included in the preliminary equipment submittal, the detailed installation submittal, and the additional information required herein, all bound in hard-cover binders and arranged for convenient use including tab sheets, all indexed and cross referenced with a separate index for each item.

b. Calibration and maintenance instructions.

c. Trouble-shooting instructions.

1.05 QUALIFICATIONS AND RESPONSIBILITY OF CONTRACTOR

A. The Contractor shall furnish and install all proposed hardware as shown on the drawings and as specified herein. The control system interface installation and wiring connections to peripheral equipment and instruments shall be the responsibility of the system supplier using qualified personnel possessing the necessary equipment and having experience in making similar installations. Evidence of such qualification, as well as notification of the system supplier assuming unit responsibility, shall be furnished to the Owner in writing for approval prior to commencement of the work.

B. Qualification Evidence: The qualification evidence shall include the following:

1. Verification that the system supplier shall have had a minimum of five years' experience with the installation and programming of industrial control systems similar in type to those to be installed in this project.

2. A list of completed similar installations including name, address, and telephone number of the owner, name of project, and date of completion.

3. The name and qualifications of supervisory personnel to be directly responsible for the programming and installation of the control system.

C. Under this section, the Contractor shall furnish the following:

1. Instrumentation equipment (Section 40 50 20).

2. Special tools and test equipment required by the supplier.

3. Installation, integration and testing.

4. Documentation.

5. Warranty (one year).

6. Shipping and receiving.

D. All calibration and final checkout of the process control and instrumentation system shall be witnessed by the Owner's Representative to determine if the system complies with the contract documents.

E. The Contractor shall be responsible for coordinating and interfacing the equipment supplied under these contract documents, with the system. Interfacing with the existing process control unit (PCU) shall be incorporated in the detailed systems documentation based on the requirements presented in the drawings and specifications.

F. The system supplier shall be experienced in the design and service of this type of equipment. In the event of a dispute as to the acceptability of the system supplier, the Owner's Representative shall make the final determination.

1.06 GUARANTEE

A. The Contractor shall repair or replace defective components, rectify malfunctions, correct faulty workmanship, all at no additional cost to the Owner during the warranty period.

B. To fulfill this obligation, the Contractor shall utilize qualified technical service personnel. Services shall be performed within five calendar days after notification by the Owner's Representative.

PART 2 - MATERIALS

2.01 INSTRUMENT SYSTEM POWER

A. Power provided for the instrument system at the facility shall be 120-volt a-c, single phase, 60 Hz.

B. Where d-c power supplies are not furnished integral with any one instrument system loop, provide separate solid-state power supplies.

2.02 MATCHING STYLE, APPEARANCE, AND TYPE

A. All display instruments of each type shall represent the same outward appearance, having the same physical size and shape and the same size and style of numbers and pointers.

PART 3 - EXECUTION

A. UNIFORMITY OF COMPONENTS

1. Components, which perform the same or similar functions, shall, to the greatest degree possible, be of the same or similar type, the same manufacture, the same grade of construction, the same size, and the same appearance.

B. MOUNTING OF EQUIPMENT AND ACCESSORIES

1. Mount equipment in accordance with the installation detail drawings as prepared by the Contractor and reviewed by the Owner's Representative. Mount equipment so that they are rigidly supported, level and plumb, and in such a manner as to provide accessibility; protection from damage; isolation from heat, shock, and vibration; and freedom from interference with other equipment, piping, and electrical work. Locate devices, including accessories, where they shall be accessible from grade, except as shown otherwise.

2. Mount local equipment in cabinets or existing panels as specified. Mount associated I/O terminals on a common panel or rack; mounting panels and rack shall be baked enamel.

3. Coordinate the installation of the electrical service to components related to the system to assure a compatible and functionally correct system. All accessories shall be coordinated, and installation supervised by the Contractor.

4. Test the completed system after installation to assure that all components are operating with the specified range and all interlocks are functioning properly.

5. Tubing Valves and Fittings: All instrument tubing manifolds shall be Type 316 stainless steel, unless otherwise specified elsewhere in these specifications. Tubing runs to transmitters shall be installed with a positive slope in one direction. Fittings and valves shall be Type 316 stainless steel. Block/bleed valves shall be as manufactured by Hex Valve Series HB59, or equal.

C. CALIBRATION

1. Each instrument requiring factory calibration shall be furnished with calibration data. The calibration data shall be factory certified.

2. Calibrate systems after installation in conformance with the component manufacturer's instructions. This shall provide that those components having adjustable features are set carefully for the specific conditions and applications of this installation and that the components and/or systems are within the specified limits of accuracy. Defective elements, which cannot achieve proper calibration or accuracy, either individually or within a system, shall be replaced. Accomplish this calibration work by a technical field representative of the single instrument supplier. Field representative shall certify in writing to the Owner’s Representative that all calibrations have been made and that all systems are ready to operate.

D. FIELD TESTING

1. Exercise systems through field tests in the presence of the Owner in order to demonstrate achievement of the specified performance.

2. Coordinate field tests dependent upon completion of work specified elsewhere. Schedule tests among all parties involved so that the tests may proceed without delays or disruption by uncompleted work.

E. OPERATOR TRAINING

1. Provide training sessions at the Owner's facilities on the equipment furnished under this contract. The education and instruction of operating personnel shall be by a qualified instructor familiar with the requirements for this project. Session dates shall be directed by the Owner.

END OF SECTION

SECTION 40 50 20

INSTRUMENTATION EQUIPMENT

PART 1- GENERAL

A. DESIGNATIONS OF COMPONENTS

In these specifications and on the Drawings, all systems, meters, instruments, and other elements are represented schematically and are designated by numbers, as derived from criteria in ISA standards. The nomenclature and numbers designated herein and, on the Drawings, shall be employed exclusively throughout shop drawings, data sheets, and other project documents. Any other symbols, designations, and nomenclature unique to a manufacturer's standard methods shall not replace those prescribed above, as used herein, and on the Drawings.

B. SIGNAL CHARACTERISTICS

Wherever possible and feasible, components shall be of electronic solid-state design and systems shall utilize the same signal characteristics throughout each and all of the several systems; transmission signals shall be 4 mA to 20 mA. The combined power supply and transmitter loops shall, when tested with appropriate precision resistors, present a voltage signal of 1- to 5-volt DC. Signal isolators shall be provided where required.

PART 2 - PRODUCTS

2.01 FLOW METERING:

A. Flow meters are as indicated on P&IDs.

B. Magnetic Flow Meter:

1. Manufacturers:

   a. ABB Mag – X,

   b. TigerMag Model 656 Sparling Instruments,

   c. Or Owner approved equal.

2. Flow Meter Primary Element:

   a. Low frequency, electromagnetic induction type: Produce dc pulse signal directly proportional and linear to liquid flow rate.

   b. Size: 6”

   c. Accuracy 1%

d. NEMA 6 housing: Moist resistant external and internal electrical conduit connections.

e. Power from signal converter.

f. Flow meter liner material use Polyurethane or Neoprene and for electrode materials, Hastelloy C or 316 Stainless Steel.

g. Use 316 stainless steel or Hastelloy C grounding rings or grounding gaskets on each end of magnetic flow meter to provide ground path and prevent interference with flow signal on non-metallic or lined pipe. Do not provide grounding probes.

h. Sensing head interchangeable with meter body without performing flow recalibration.

i. High impedance device of not less than 10^{12} ohms to minimize span shift due to electrode coating.

j. Explosion proof sensor certified by Factory Mutual Research for Class I, Division I or Division II as specified or shown, Groups C and D when sensor is located in hazardous area.

3. Signal Converter:

a. Remote mounted (wall), microprocessor controlled.

(1) Operate on 120 vac, 60 Hertz power.

(2) Provide pulsed dc voltage to magnet coils of magnetic flow meter to establish magnetic field.

(3) Convert flow signal from magnetic flow meter to analog and digital output signals, for bidirectional flow.

b. Span shall be continuously adjustable between 1 and 33 feet/second. Adjustment shall be by keypad.

c. Converter interchangeable with magnetic flow meter element and require no additional flow calibration.

d. Isolated 4-20 mAdc analog current output into 0 to 500-ohm load and 24 vdc scaled, software adjustable pulse output.

e. Cast Aluminum NEMA 6X enclosure.

f. Noise reduction feature to stabilize flow reading.

g. Automatic empty pipe detection.

h. Suitable for -40 degrees F to 150 degrees F ambient temperature.

4. Cable:

a. Provide sufficient length of manufacturers standard signal cable to connect meter primary element and converter.

b. Use single conduit run between converter and meter.

PART 3 - EXECUTION

A. Refer to Specification 40 50 00

END OF SECTION

SECTION 46 33 33.01

POLYMER BLEND FEED EQUIPMENT AND APPURTENANCES

PART 1 - GENERAL

1.01 DESCRIPTION:

A. Provide and test polymer blend feed equipment and appurtenances, as indicated and in compliance with Contract Documents.

B. Chemical for testing to be supplied by the Contractor.

1.03 SUBMITTALS:

A. Submit the following in accordance with Section 01 33 00:

1. When the Contractor proposes equipment which requires an arrangement differing from that indicated on the drawings or specified, prepare and submit for review detailed structural, mechanical, and electrical drawings and equipment lists, utilities consumption schedule and operating instructions, showing all necessary changes and embodying all special features of the equipment he proposes to furnish. Make changes, if accepted at no additional cost to Owner.

2. Provide a detailed layout with dimensions of the equipment proposed in the area allotted on the contract drawings.

3. Provide calculations for polymer blending.

4. Provide confirmation on piping layout and sizing as indicated on the drawings.

5. Certified shop and working drawings.

6. Certified setting plans, with tolerances, for anchor bolts.

7. Operating and maintenance instructions and parts lists.

8. Shop drawings details for accessory items.

9. Number and identify components to correspond with terminology on drawings. Use these numbers on all submittal sheets and shop drawings.

10. Recommendations for short and long term storage.

11. Sales bulletins or other general publications are not acceptable as submittals for review except where necessary to provide supplemental technical data.

12. ISO 9001 certification or other quality control manual demonstrating a complete system for quality management.

13. Polymer blend feed equipment manufacturers must be capable of providing a list of customers using at least five (5) similar system for at least ten (10) years.

14. Material Certification:

    a. Provide certification from the manufacturer that the materials of construction specified are recommended and suitable for the service conditions specified and indicated. If materials other than those specified are proposed based on incompatibility with the service conditions, provide technical data and certification that the proposed materials are recommended and suitable for the service conditions specified and indicated including an installation list of a minimum of five (5) installations in operation for a minimum of three (3) years. Provide proposed materials at no additional cost to the Owner.

    b. Where materials are not specified, provide technical data and certification that the proposed materials are recommended and suitable for the service conditions specified and indicated.

15. Certified results of factory tests.

B. A copy of the contract mechanical process, electrical and instrumentation drawings, with addenda that are applicable to the equipment specified in this section, marked to show all changes necessary for the equipment proposed for this specification section. If no changes are required, mark all drawings with "No changes required".

    1. Failure to include all drawings applicable to the equipment specified in this section will result in rejection of the entire submittal with no further review.

C. A copy of this specification section with addenda and all referenced specification sections with addenda, with each paragraph check-marked to indicate specification compliance or marked to indicate requested deviations and clarifications from the specified requirements.

    1. If deviations and clarifications from the specifications are indicated, therefore requested by the Contractor, provide a detailed written justification for each deviation and clarification.

    2. Failure to include a copy of the marked-up specification sections and or the detailed justifications for any requested deviation or clarification will result in rejection of the entire submittal with no further review and consideration.

1.04 SPARE PARTS:

A. Furnish following spare parts, identical and interchangeable with similar parts installed in work:

1. One control circuit board with drive motor fuses and controller fuses for each different size of motor furnished.

2. For metering pump:

   a. Two each of all check valves and seals.

   b. Two complete sets of all gasket and seals.

3. For polymer processing systems:

   a. Two alarm and control switches of each type.

   b. Ten of each type lamp, unless otherwise specified.

   c. One pressure switch of each type.

   d. Two relays of each type.

   e. Two electric selector switches of each type.

   f. Two pressure-reducing valves.

   g. One pushbutton station of each type.

   h. One of each size timer.

4. Provide all other manufacturer's recommended spare parts necessary to maintain each piece of equipment for a period of one year.

1.05 QUALITY ASSURANCE:

A. Do work required by and in accordance with applicable State and local codes; arrange for permits, inspections and tests required by these codes. Provide systems and items of equipment that conform to applicable safety standards including those for safety of personnel.

B. Provide components to manufacturer's standard for service intended unless otherwise required.

C. Provide equipment of manufacturers' latest and proven design. Polymer unit to be a standard cataloged product and as specified and indicated.

D. Provide services of factory-trained Service Technician, specifically trained on type of equipment specified:

1. Service Technician must have a minimum of five (5) years of experience, all within the last seven (7) years, on the type and size of equipment.

2. Service Technician must be present on site for all items listed below. Person-day requirements listed are exclusive of travel time, and do not relieve Contractor of the obligation to place equipment in operation as specified.

3. Installation: Inspect grouting, location of anchor bolts; setting, leveling, alignment, field erection; coordination of piping, electrical and miscellaneous utility connection:

   a. [1/2] person-days.

4. Functional Testing: Calibrate, check alignment and perform a functional test with water. Tests to include all items specified.

   a. [1/2] person-days.

5. Performance Testing: Field performance test equipment specified.

   a. [1/2] person-days.

6. Vendor Training: Provide classroom and field operation and maintenance instruction including all materials, slides, videos, handouts and preparation to lead and teach classroom sessions.

   a. [1/2] person-days.

7. Credit to the Owner, all unused service person-days specified above, at the manufacturer's published field service rate.

8. Any additional time required of the factory trained service technician to assist in placing the equipment in operation, or testing or to correct deficiencies in installation, equipment or material shall be provided at no additional cost to the Owner.

E. Note, an area is allotted to this equipment, as indicated. If necessary, provide all structural, architectural, mechanical, electrical and plumbing revisions at no additional cost to the Owner.

1.06 DELIVERY, STORAGE AND HANDLING:
Not Used

PART 2 - PRODUCTS

2.01 SYSTEM DESCRIPTION:

A. Systems:

1. Polymer system capacities are indicted in the Polymer System Schedule in the drawing set.

B. Polymer Blend Feed Systems – General:

1. Polymer blend feed system is a complete integrated system and, as such, furnished by one supplier who will provide all equipment and appurtenances, regardless of manufacturer and be responsible for satisfactory operation of entire system.

2. Polymer blend system to have the capability of diluting and activating emulsions, dispersions and solutions of polymer. Furnish the polymer blend feed system designed to mix a 20-50 percent concentrated liquid polymer solution, with viscosities up to 60,000 cps with water and automatically produce a metered polymer solution with capacities indicated hereinafter and to convey the diluted polymer solution to application points shown on the drawings.

3. Polymer blend unit with provisions for mixing, blending and aging the polymer solution. This may be with mixers not to exceed 600 rpm or in-line static mixers. The solution to be mixed in a low shear environment and to be homogenous.

4. The polymer blend dilution and feed system shall be capable of effectively activating and fully blending with water a homogenous polymer solution ranging from 0.1 percent to 1 percent concentration of emulsion polymers with active contents up to 75 percent and Mannich polymers with a viscosity of up to 75,000 cps up to a 10 percent solution. To the application point(s) shown on the drawings.

5. Provide polymer system with rotameters and integral rate adjusting valve to control amount of dilution/mixing water.

6. Polymer blend feed system shall be housed in a fiberglass reinforced polyester (FRP) or Type 316 stainless steel enclosure. Provide adjustable controls provided for polymer dosage rate in pounds per day (gallons per day) and dilution water in gallons per hour (minute).

7. Polymer blend feed system capable of operating with a water supply pressure of 40 psi (275 kPa). If system furnished requires additional water pressure to operate, then supplier to furnish in-line water booster pump of sufficient capacity and pressure to operate system and to interlock pump to operate when polymer system is activated. All shall be done at no additional cost to the Owner.

8. Polymer blend feed system shall be factory assembled and pre-wired, capable of being floor or floor stand mounted as indicated.

2.02 MANUFACTURERS:

A. VeloDyne (Velocity Dynamics Inc.).

B. Dynablend/Fluid Dynamics/UGSI chemical.

C. Or Engineer approved equivalent.

2.03 POLYMER BLEND SYSTEM COMPONENTS:

A. Provide systems constructed of components compatible with the service specified and indicated.

B. Provide polymer blend feed system to consist of pumps, mixers, and appurtenances, as indicated and specified.

C. Provide prewired system for electrically operated and motor-driven equipment including all auxiliary relays so as to require only power and external connections.

D. Provide panels to meet the following:

1. Manufacture NEMA 4X control boxes, electrical panels and similar equipment of fiberglass or reinforced polyester and gasketed to prevent chemical corrosion. Provide electrical control items that are rated NEMA Type 13, unless otherwise specified.

2. Control power for powering equipment: 120V/1 ph/60 Hz.

3. Provide control wiring of No. 14 THWN stranded copper, shield signal wiring.

4. Provide instruments and accessories mounted, wired or piped to terminal strips or bulkhead fittings and identified to provide ease of field connection.

5. Provide white lamicoid nameplates with black filled engraved legends, attached with Type 316 stainless steel screws.

6. Provide contacts for control of motor-operated or electrically operated equipment rated not less than 10 amperes on 120 volts or gold cross-bar contacts for low current instrument signals.

7. Provide fuses and/or switches, required by instrumentation manufacturer, for equipment.

E. Polymer Blend Feed Mixing Chamber:

1. Provide a hydro-mechanical blending device capable of operating at its capacity with a plant water pressure alone at 30 psi (200 kPa).

a. Provide the system capable of producing its mixing energy independent of plant water pressure through a variable intensity, controllable mechanical mixer, capable of producing high, non-damaging mixing energy at all flow rates without damage to the polymer’s molecular structure.

b. Provide inlet with ball valve for isolation.

2. Provide the mixing chamber with a Type 304 stainless steel motor adapter with flange, Type 316 stainless steel mixing chamber, clear Lexan front cover to view

the mixing action and blending effectiveness (clear pipe is not acceptable to meet this requirement) and a PVC water flow control and hydrodynamic mixing valve.

a. Pressure Rating: 100 psi (690 kPa).

b. Provide all holes tapped in plastic with helicoil inserts for increased strength.

c. Provide inlet with ball valve for isolation

3. In order to handle the wide range of polymers available, independent of water pressure, provide a variable speed, Type 316 stainless steel mixing impeller specifically designed for blending liquid polymer.

a. Provide the mixer designed to induce high, non-damaging mixing energy over the systems full flow range.

b. Provide the impeller speed controlled by an SCR motor controller and wash-down duty motor.

c. Provide baffles on the outside of the impeller to encourage flow from the center to the outer diameter of the mixing chamber to provide effective inter/back mixing within the chamber.

d. Provide the mixer drive shaft sealed by a mechanical seal with an integrally mounted and factory plumbed seal flushing valve.

e. Provide the seal arrangement accessible for replacement. Systems without a seal flushing system are not acceptable.

f. Systems that rely solely on plant water pressure to create mixing energy are not acceptable.

4. Provide two (2) neat polymer check valves specifically designed to isolate neat polymer from dilution water.

a. Provide valves designed with an open, unobstructed path to the valve seat.

b. Valve body: Teflon with Viton seals.

c. Valve poppet and spring: Type 316 stainless steel and designed to prevent polymer from flowing through the spring, causing build-up and plugging. Plastic spring covers are not acceptable.

d. Provide the valve accessible for cleaning and designed so that no tools are required for removal, cleaning or replacement.

e. Conventional check valves, valves that rely on ball seals, and or check valves that are installed inside the mixing chamber, or which require mixing chamber disassembly for servicing are not acceptable.

f. Provide the locking pin used to hold the valve in place attached to the mixing chamber with a lanyard.

F. Polymer Blend Feed Dilution Assembly:

1. Provide the dilution water flow rate monitored by a rotameter type flow meter having a range of 0.5 to 5 gpm (2 to 20 L/min).

2. Provide unions on the flow meter for removal and cleaning.

3. Provide a 120V, 1-phase, 60 Hertz, Type 304 stainless steel solenoid valve for on/off control of total dilution water flow.

4. Provide a 2-1/2 inch (65 mm) diameter non-liquid filled pressure gauge and Type 316 stainless steel diaphragm seal to monitor dilution water inlet pressure.

5. Provide an industrial duty differential pressure switch rated NEMA 4 to sense low dilution water differential pressure, manufactured by Ashcroft or equal.

6. Provide the dilution water inlet connection located as indicated.

G. Progressive Cavity Neat Polymer Metering Pump:

1. Provide each unit with two (2) neat polymer metering pumps integrally mounted on the systems skid.

a. Provide the second pump designed for metering neat emulsion polymer with viscosities as high as 3,500 cps.

(1) Emulsion polymer pump range: As noted on the Schedule.

b. Pumps: Positive displacement, progressive cavity type constructed of Type 316 stainless steel and Viton.

(1) Pump seal: Packing. Mechanical seals are not acceptable.

(2) minimum of two stages to minimize slip.

(3) Motors: TEFC or TENV 90 VDC Wash-down duty

(4) Provide the motor controlled by an SCR motor controller located in the system control panel.

(5) Provide a gear reducer to produce a maximum pump shaft speed of not more than 250 RPM for Mannich polymer and a maximum of 400 RPM for emulsion polymer.

2. Provide two (2) calibration columns, one for each pump, each separately valved with two full port PVC ball valves having Viton o-rings. Provide the columns calibrated for a one minute draw-down for each pump and read in gph [L/h].

3. Provide a pressure gauge, pressure switch with pressure sensor to monitor polymer line pressure.

4. Pressure switch to alarm on high polymer line pressure.

5. Provide a metering pump priming assembly including vacuum device and valve.

6. Provide a thermal type loss of polymer flow sensor for each metering pump.

7. Provide the emulsion polymer inlet connections located as indicated.

H. Polymer Blend Feed Solution Mixing Assembly:

1. Provide a static mixer for secondary mixing of polymer solution.

2. Provide a 2-1/2 inch (65 mm) diameter non-liquid filled pressure gauge and Type 316 stainless steel diaphragm seal to monitor system discharge pressure.

3. Provide a high discharge pressure switch

4. Provide a swing type check valve to prevent back flow sized for the total solution flow of the system. Provide valves constructed of PVC and Viton.

5. Provide the solution discharge connection located as indicated.

I. Polymer Blend Feed Controls:

1. Provide a single control panel integral to the systems frame for all polymer system controls.

2. Enclosure: NEMA 4X and constructed of Type 316 stainless steel.

3. Provide the control panel to include all digital displays, potentiometers, switches, lights, relays, motor controllers and other control devices required for a complete operable system.

a. Provide the control panel and all components industrial duty.

4. Provide all skid mounted electrical components interconnected to the control panel and terminated at numbered and labeled terminal blocks. Provide the terminal blocks sized for 14 gauge wire.

a. Provide wiring run through wire race-way and numbered with adhesive type labels.

b. Position the control panel such that there are no obstructions in front of the control panel per related NFPA requirements.

5. Control features:

a. Operator Interface – Discrete Selector Switch:

b. Main Power Rotary Disconnect Switch

c. Emergency STOP push button

d. System ON / OFF(reset) / Remote

e. One-Turn Potentiometer – Mixer Speed

f. Ten-Turn Potentiometer; one for each pump

6. Status / Alarm Indicators:

a. Main Power ON

b. Display of polymer Metering Pump Rate (GPH)

c. Low Water Differential Pressure Alarm

d. High Polymer Pump Line Pressure Alarm

e. Low Polymer Flow Alarm

7. Inputs:

a. Remote Start / Stop (discrete dry contact)

b. Pacing Signal Based on Process Flow (4-20mA)

8. Outputs:

a. System Running (discrete dry contact)

b. Remote Mode (discrete dry contact)

c. Common Alarm (discrete dry contact)

d. Polymer Pump Rate (4-20mA)

J. Polymer Blend Feed Power:

1. [120V/1 ph/60 Hz].

2. Provide a circuit breaker on the main control circuit and on each motor as required. Fuses used for circuit protection are not acceptable.

K. Polymer Blend Feed Equipment Skid:

1. System's frame: Type 316Lstainless steel construction.

2. Provide all piping rigidly supported.

3. Position the control panel at operator eye level.

4. Provide all system components accessible for maintenance.

2.04 ACCESSORIES:

A. I.B.C. (Intermediate Bulk Container) Tote:

1. Provide a 120 Gallon IBC Tote

a. Dimensions 32” x 32” x 38” (LxWxH)

b. Translucent sidewalls and gallon calibration

c. Material: HDPE

d. Four lift ears for lifting

e. 7” Threaded lid opening

f. 2” Drain valve w. male quick disconnect coupler

B. I.B.C. (Intermediate Bulk Container) Accessories:

1. Provide 1 per IBC tote.

a. 3/4 HP (0.56 kW), 120 VAC, 350 RPM, TEFC gear motor with thermal overload protection.

b. Mixer shaft: Type 316stainless steel with an external thrust bearing from the motor for support.

c. Provide the mixer frame constructed of Type 316 stainless steel

(1) Provide lifting handles.

(2) Provide moveable brackets to adjust the width of the mixer for the I.B.C. being used.

(3) Provide a Type 316 stainless steel wall mounting bracket with drip pan to support the mixer and collect polymer drips while the mixer is not in use.

d. Bearing frame: Type 316 stainless steel.

e. Two 5 inch (125 mm) impellers.

2. Provide the I.B.C. mixer controls integral to the motor and include an ON/OFF switch, and 0-60 minute timer and 10 foot (3 m) power lead.

3. Provide a polymer I.B.C. pump suction assembly.

a. Provide a quick disconnect cam-lock fittings

b. 1 inch (25 mm) full port ball valve

c. 15 feet (5 m) of 1 inch (25 mm) braided PVC hose. .

4. Provide one (1) Ultra-Spills Pallet P4 Plus for each tote.

a. Sump capacity of 75 gal.

b. Load capacity of 9,000 lbs

c. Dimensions 61” x 62” x 8 ¾” (LxWxH)

d. Linear Low Density Polyethylene

2.05 MOTORS:

A. Enclosure: TEFC, except as specified

B. Service Factor: 1.15

2.06 SHOP PAINTING:

A. Primer and Finish Paint: Shop apply to all exterior ferrous surfaces, high solids epoxy.

B. Ferrous surfaces which are not to be painted shall be given a shop applied coat of grease or rust resistant coating.

C. Provide additional shop paint coating for touch-up to all surfaces after installation and testing is completed and equipment accepted.

2.07 SHOP TESTING:

A. Provide certified shop testing that polymer system meets the capacities required.

PART 3 - EXECUTION

3.01 INSTALLATION:

A. Install equipment and appurtenances in accordance with manufacturer's printed instructions.

B. Install polymer processing units as shown on the drawings. Assure there is no pipe stress on piping connections and grout base.

3.02 FIELD TESTING:

A. General:

1. Calibrate in the presence of the Engineer & Owner.

2. Coordinate testing with operation of other portions of the facility, as required. Arrange for temporary piping and wiring modifications which may be needed if chemical cannot be fed at intended dosing points, or if other interconnected electrical equipment is not operational.

3. After cleaning, completely test each polymer blend system to verify that equipment is capable of performing its specified function in satisfactory manner without mechanical or electrical defects, binding, or operational difficulties. Correct defects and deficiencies and repeat all tests until satisfactory results are obtained. Correct excessive vibration, leakage or noise. Make connections watertight as appropriate.

4. Demonstrate accuracy of units and bring within limits specified herein.

5. At the time of the tests, make final adjustments necessary to place equipment in satisfactory working order.

6. Tests to be done using chemicals for which each system was designed. Chemicals to be provided by the Contractor.

7. Complete preliminary and calibration testing and corrections prior to acceptance testing, as specified herein, to be conducted with the manufacturer's technical representative.

8. Copies of tests results and data to be furnished to the Engineer.

9. Neutralize and dilute chemicals wasted during testing procedures with 10 volumes of water prior to disposal into plant drain system. Direct dumping into drains without prior neutralization and dilution is hazardous and not permitted.

B. Polymer System (Acceptance Tests):

1. Submit copies of manufacturer's preliminary and calibration with data showing numerical values of discharge to nearest tenth of a pound per hour (50 g/h), at 100, 75, 50, and 25 percent settings.

2. Submit copies of individual calibration curves with data to Engineer at least 15 days prior to acceptance testing. Notify Engineer in writing when equipment is ready for acceptance testing, and make no adjustments or modifications to pumps after that time, without written permission of Engineer.

3. During acceptance testing demonstrate correct functioning of control stations.

4. To determine deviation compare measured feeder output at various settings with output indicated by manufacturer's calibration curves. Feeders with deviation greater than plus or minus 3.0 percent of maximum pump output are not acceptable.

3.03 FIELD TOUCH-UP PAINTING:

A. After installation and accepted testing by the Engineer apply touch-up paint to all scratched, abraided and damaged shop painted surfaces. Coating type and color shall match shop painting.

3.04 CONTRACT CLOSEOUT:

NOT USED

END OF SECTION

SECTION 46 76 21

BELT FILTER PRESSES AND APPURTENANCES

PART 1 - GENERAL

1.01 SUMMARY:

The contractor shall furnish and install the belt filter press and associated piping, valves, controls, wiring, and appurtenances as specified and shown on the drawings. the belt filter press system specified in this section shall be provided by a single manufacturer to ensure coordination and compatibility of equipment. compliance with the requirements and stipulations specified herein may necessitate modifications to the manufacturer's standard equipment. in addition, thecontractor shall be responsible for insuring a complete and operable belt press system and shall establish the exact limits of work between the contractor and belt filter press supplier.

1.02 REFERENCES:

The design, manufacture, and installation of this equipment shall meet or exceed the applicable provisions and recommendations of the following codes and standards:

A. AGMA, American Gear Manufacturers Association.

B. ASME, American Society of Mechanical Engineers.

C. ASTM, American Society of Testing and Materials.

D. ANSI, American National Standards Institute.

E. IEEE , Institute of Electrical and Electronics Engineers.

F. NEC, ational Electrical Code.

G. OSHA, Occupational Safety and Electrical Code.

1.03 DEFINITIONS

A. Solids capture: solids capture is defined as the percent of the total suspended solids content in the feed sludge that remain in the thickened or dewatered end product on a weight basis.

1. For purposes of this specification, "Capture" is defined as:
% Capture=(C/F) [(F-E)/(C-E)] x 100%

Where:

C = Dewatered Sludge Total Solids (% TS)
F = Feed (% TSS); excluding any dilution from polymer solution flow

E = Filtrate (% TSS); excluding any dilution from polymer solution and belt wash water flows.

B. Polymer Consumption: To be based on 100% active polymer.

1.04 SYSTEM DESCRIPTION

A. Design criteria: the belt filter press shall be designed to extract water from the sludge specified herein after conditioning of the sludge with a polymer solution. The process of dewatering shall produce a finished sludge product meeting the following performance requirements.

B. Performance requirements: the belt filter press shall operate within the design conditions based on "conditions of service" section 1.08 and meet the following performance criteria:

1.	Minimum dewatered sludge solids (% ts)	14.5
2.	Minimum solids capture (% of tss)	95
3.	Maximum polymer dosage (active lbs/ton ts)	10 -15
4.	Maximum hydraulic loading (gpm)	160 - 180
5.	Maximum solids loadings (lbs ts/hr)	870
6.	Number of belt filter press(es)	1 (Base Bid), 2 (Altered Bid)
7.	Effective working width per press	2m

1.05 SUBMITTALS:

A. Complete assembly, foundation, and installation drawings, together with detailed specifications and data covering materials used, power driveassembly, parts, instrumentation devices and other accessories forming a part of the equipment furnished shall be submitted for review. The following information shall also be submitted with shop drawings.

1. Drawings showing the manufacturers recommended equipment base(s), including dimensions, weights, loadings, drainage piping and other information necessary to install the equipment.

2. Structural calculations demonstrating compliance with the structural frame design specification.

3. Details of coating system for structural frame, rolls and other metallic components.

4. Details of sludge/polymer mixer assembly.

5. Details of gravity dewatering section including inlet feed chute, plow assemblies, belt support method, sludge retaining barriers, etc.

6. Details of pressure/shear zone including calculations of wedge and "S" roll working areas.

7. Details of filtrate drainage/collection system.

8. Statement of minimum hours of belt life warranted.

9. Details of belt drive assembly including belt speed range, drive configuration, speed reducer, motor name plate data, and drive controller features.

10. Details of belt tracking/tensioning system including schematics, utility requirements, hydraulic components, valves, piping and control devices.

11. Details of belt wash stations including wash water supply requirements (flow and pressure).

12. Details of roller assemblies including type of construction, materials, dimensions, deflection calculations and coatings.

13. Details of bearings for roller assemblies including bearing manufacturer, type housing, and AFBMA L-10 life calculations.

14. Details of electrical components including enclosures, and machine mounted components.

15. Elevation of local control panel and operator control station showing panel mounted devices. Provide details of power distribution and full load current draw of panel. Provide list of all terminations required to receive inputs or transmit inputs from the local control panel.

16. Nameplate data of each electric motor proposed to be furnished with the belt filter press equipment package.

17. Wiring diagrams of field connections with identification of terminations between local panel, junction boxes, equipment items, instrument devices, and the like.

18. Complete electrical control schematic diagram.

19. List of spare parts to be furnished.

20. List any exceptions or deviations from the contact documents.

21. Statement of machine warranties.

22. Control philosophy provided in both written and schematic form.

B. Owner's Manuals. Operations and maintenance information and equipment maintenance summary sheets shall be furnished for the equipment specified herein.

C. A Manufacturer's Certificate of satisfactory installation is required for work under this section.

1.06 QUALITY ASSURANCE

A. Other than the named supplier, all manufacturer's proposing equipment described herein, shall provide a detailed submittal package which shall consist, at a minimum, all information and details prescribed in Section 1.04 of this specification. All pre-qualification submittals shall be submitted to the Engineer at least 30 days prior to the bid date.

B. If submitted equipment requires arrangement differing from that indicated on the drawings or specified, prepare and submit for review complete structural, mechanical, and electrical drawings and equipment lists showing all necessary changes and embodying all special features of equipment proposed. Any changes are at no additional compensation and the Contractor shall be responsible for all engineering costs of redesign by the Engineer if necessary.

C. Only those manufacturers capable of providing irrefutable evidence of a minimum of ten (10) years' experience in the manufacture and installation of the exact model or equivalent model meeting the filtration area requirements shall be considered.

1.07 DELIVERY, STORAGE & HANDLING

A. Items to be shipped as complete assemblies except where partial disassembly is required by transportation regulations or for protection of components.

B. Dewatering belts to be shipped separately.

C. Spare Parts.

1. Pack in containers bearing labels clearly designating contents and pieces of equipment for which the part is intended. Each part shall be identified with a tag bearing its part number and a part description.

2. Delivered at same time as equipment.

1.08 CONDITIONS OF SERVICE

A. Condition of sludge feed shall be based on the following design requirements as specified by the customer:

1. Type of Sludge Aerobically Digested Sludge

2. Feed Solids Concentration (%TSS) 1-2%

3. Solids Loading (lbs TS/hour) 468 – 874

1.09 WARRANTY

The belt filter press manufacturer shall warrant the following components:

A. The manufacturer shall warrant against any defects in material or workmanship to the belt filter press framework and coating for a period of 18 months from date of delivery or 12 months from start-up.

B. The manufacturer shall replace any bearing that fails during the prescribed warranty period, provided the owner has lubricated and otherwise maintained the bearing in accordance with the intervals and procedures set forth in the manufacturer's operations and maintenance instruction manual. The complete bearing assembly as specified herein shall be warranted for a period of 18 months from the date of delivery or 12 months from start-up.

C. The manufacturer shall replace or repair any roller or roller coating that fails during the warranty period, provided the roller or roller coating has not been damaged by external action such as impact, fire, weld splatter, etc. beyond the manufacturers control. The manufacturer shall warrant the roller and roller coating to be free from defects in material and workmanship for a period of 18 months from the date of delivery or 12 months from start-up. Neither the rollers nor coating shall require preventative maintenance during the warranty period.

D. The manufacturer will replace any stainless-steel parts that exhibit corrosion due to manufacturing cross contamination from non-stainless-steel parts if they have not been passivated.

1.10 SPARE PARTS:

A. The followomg spare parts shall be furnished with the belt filter presses:

1. One (1) set of filter belts for each press supplied.

2. One (1) complete set of urethane containment seals for the entire belt filter press.

3. Two (2) complete sets of doctor bleades for each press supplied.

4. One (1) of each size and type of roller bearing complete.

5. Two (2) complete sets of rubber seals for the gravity and wedge zone for each press supplied.

Two (2) complete sets of belt wash box seals for each press supplied.

PART 2 - PRODUCTS

2.01 MANUFACTURERS: The belt filter press systems shall be the ANDRITZ separation 2.0 meter SMX® S8 or Engineer approved equal.

2.02 CORROSION PROTECTION: All stainless-steel components shall be passivated according to ISO 16048.

2.03 MATERIALS: The following materials of construction and coatings shall be provided for the belt filter press and related components unless specified otherwise herein:

Component	**Material**
24" Perforated "S" Roller	304L Stainless Steel, 1/4" plate, ASTM A240
16" Perforated "S" Roller	304L Stainless Steel, 1/4" plate, ASTM A240
Doctor Blades	U.H.M.W. Polyethylene
Doctor Blades Support Mechanism	304L Stainless Steel
Drain Piping	PVC Schedule 40
Drainage & Filtrate Pans	304L Stainless Steel, Minimum 14 Gauge, ASTM A240
Frame	304L Stainless Steel, Minimum thickness 10 mm.
Gravity Zone Belt Support Structure	304L Stainless Steel with UHMW Replaceable Wear Strips
Gravity Zone Side Walls	304 L Stainless Steel, Minimum 12 gauge, ASTM A240
Camber Wedge Belt Support Structure	304L Stainless Steel with UHMW Replaceable Wear Strips
Distribution Headbox Assembly	304L Stainless Steel
Nuts, Bolts and Fasteners	316 Stainless Steel
Plow Supports	High Density Polyethylene Plows; 304L Plow Holders, Support Rods, and Support Structure
Polymer Injection Ring	High Density Polyethylene
Bearing Housings	Cast Iron Nylon Coated
Roller Coatings	Buna-N Rubber and PE/Thermoplastic Nylon
Rollers	A519 Mechanical Tubing / A-53 Pipe
Shower Housing	304 L Stainless Steel, Minimum 12 gauge, ASTM A240
Shower Pipe, Nozzles & Wire Brush	304L Stainless Steel
Splash Guards	304 L Stainless Steel, Minimum 14 gauge, ASTM A240
UTILITIES	
Total connected load	1 ea. @ 3.0 HP
Air requirement	4 CFM@90psi (1.9 lps@6.2 bar)
Washwater requirements	60gpm (3.8 lps)@ 120 psi

2.04 EQUIPMENT:

A. The belt filter press shall be designed to extract water from the sludge type specified herein, after conditioning of the sludge with an appropriate flocculant. This process of dewatering shall be accomplished by the combination of chemical conditioning of the sludge, drainage of free water in the horizontal gravity zone, the gentle compression of the sludge in the wedge zone, and the compression of the stabilized solids in the pressure/shear zone. The belt filter press shall have a minimum effective dewatering width of 2.0 meters and a minimum combined effective filtration area of 290 square feet. All moving wetted parts, and all wetted parts on which moving parts contact, shall be fully corrosion resistant for the material being processed, as specified herein. All components of the belt filter press shall be designed to withstand all stresses that may occur during erection and operation.

B. The belt filter press construction shall allow easy access to internal components, operational adjustments and routine maintenance shall be possible without taking the machine out of service. Any disassembly required for maintenance and repair shall be possible within the clearances shown on the drawings.

C. The belt press shall be delivered to the job site as a completely assembled package and ready for service after connection of piping, wiring and utilities. All piping provided with the belt filter press shall be schedule 40 PVC or flexible hose.

D. The overall length, width, height, of the fully assembled belt filter press shall not exceed existing area respectively. Minimum dry weight of the unit shall be 17,747 pounds.

E. The belt filter press shall be designed such that the "sludge" side of the belt does not come in contact with roller face to prevent the accumulation of material on the roller assemblies.

2.05 COMPONENTS:

Each belt filter press shall include structural frame, sludge/polymer mixer, sludge inlet assembly, gravity drainage section, pressure/shear dewatering section, filtrate drainage system, belts, belt drive assembly, belt tracking/tensioning systems, doctor blades, belt wash stations, roller assemblies, bearings, safety devices, electrical components, and any other specified and necessary components.

A. Structural frame

a. The structural frame shall be constructed of welded and bolted stainless steel members. The frame shall be designed such that roller assemblies can be removed from the side or end of the belt press without removing structural members or repositioning more than one (1) roller assembly.

b. The structural members shall be structural plate, conforming to the standard specifications for structural steel, ASTM A320. The maximum deflection of each structural member shall not exceed L/480, were L is the span length. The maximum stress of each structural member shall not exceed 1/5 the members yield point. All frame members in the running machine direction shall possess a minimum moment of inertia of 26.7 in^4 in the primary load bearing direction.

c. All belt press loads imposed on the building floor shall be vertical. All horizontal loads shall be contained within the structural frame. The belt press frame shall be designed to interface with and facilitate the installation of access platforms along each longitudinal side of the belt press.

d. The structural frame shall be provided with "welded in place" lifting eyes designed to lift the fully assembled belt press.

B. Gravity Drainage Section

a. The belt filter press shall be provided with a sludge inlet assembly consisting of a distribution chute and underflow leveling weir designed to uniformly distribute the conditioned feed sludge across the entire working width of the gravity section. The entire assembly and necessary supports and hardware shall be constructed of 304L stainless steel.

b. The belt filter press shall have a inclined, horizontal gravity drainage section consisting of a minimum working belt area of 92 ft^2 (8.55 m^2). Side skirts constructed of 12 gauge 304L stainless steel shall be mounted on both sides of the belt and at the sludge feed end of the gravity section. The side skirts shall be equipped with Buna seals to prevent spillage of sludge.

c. The belt, while in the gravity dewatering section, shall ride on top and be supported by a series of UHMW polyethylene replaceable wear strips held in place and supported by a 304L stainless steel support bracket with a minimum deflection of 0.06" (1.5mm) at mid span under full sludge load. The support shall be a minimum 2" (51mm) wider than the belt on each side. Wear strips shall be replaceable without removing or disassembly of gravity section sidewalls and plow assembly.

d. There shall be eight (8) rows of plows, with a total of 67 plows in the gravity section. Each plow shall continuously contact the belt and be designed such that it continually rolls the sludge. Each set of plows shall be mounted on a stainless steel horizontal support bar. Plows shall be liftable from the belt while the belt filter press is in operation.

C. Pressure / Shear Dewatering Section

a. The belt filter press shall have a pressure/shear dewatering zone wherein increasing pressure and shearing forces are applied to the sludge.

b. The first section of this zone is the wedge dewatering area wherein the upper and lower belts converge thus entrapping the sludge between them. This zone shall consist of a minimum 94 ft^2 (8.73 m^2). Utilizing the combined surface area of each belt actually contacting the sludge while the wedge opening is in maximum position.

c. The wedge shall be designed as self-adjusting and shall apply increasing pressure to the sludge as it is conveyed through this zone. The maximum deflection in this section shall not exceed 0.06"(1.5mm) at 0.75 PSI (.052 bar) wedge pressure at mid span. The use of designs which do not support the belt, or utilize impervious pressure plates to create pressure are not acceptable. All support framework shall be 304L stainless steel.

d. Upon exiting the wedge zone the entrapped sludge shall be conveyed through a series of 8 rolls positioned to create a serpentine ("S") configured belt path. "S" rolls shall decrease in diameter in a progressive fashion. The first and second "S" rollers shall be perforated and shall be 23.6” (600mm) and 15.75”(400mm) diameter, respectively. The combined area in which one belt is in actual contact with a roll body shall be a minimum of 108 ft^2 (10.04 m^2) Transition area between "S" roll tangents shall not be considered in this calculation.

e. The "S" rolls in the pressure/shear zone shall be positioned such as to facilitate access to the internal working areas of the belt filter press for wash down, maintenance and process optimization.

D. Filtrate Collection / Piping

a. The belt filter press shall be provided with drainage pans and piping to collect and discharge dewatered filtrate from the gravity drainage and pressure/shear dewatering sections. All filtrate shall be captured and contained by the drainage pans without spilling to the floor. The drainage pans shall extend a minimum of 3" (76mm) beyond the belt width on both sides and shall have a minimum 1"(25mm) depth at any given point. The drainage pans shall be constructed of a minimum 14 gauge type 304L stainless steel. The use of fiberglass or any non-specified material of construction is not acceptable.

b. The low point of any drainage pan shall be provided with a minimum 4" dia. connection for drain piping. Drainage piping shall be Sch. 40 PVC and shall be routed from each pan and shall terminate within the confines of the filtrate sump. The drainage piping shall be adequately sized to prevent flow restrictions.

E. Dewatering Belt

a. The press shall incorporate the use of two dewatering belts (1 set). Belts shall be seamed and fabricated of monofilament polyester, wear-resistant plastic materials. The mesh design shall be selected for optimum dewatering of the sludge to be processed with minimum blinding of the filter belt.

b. Each belt and connecting splice shall be designed for a minimum tensile strength equal to five times the normal maximum dynamic tension to which the belt shall be subjected. The splice shall be designed to fail before the belt and shall be constructed of type 316L stainless steel.

c. Belts shall have a width as specified and shall have a minimum life of 2,000 hours continuous operation at the rated design conditions. Belts shall be designed for ease of replacement with a minimum of belt filter down time.

F. Belt Drive Assembly

a. The belt filter press shall be provided with one belt drive assembly. The drive assembly shall not be positioned in any area which is not readily accessible or subjects the drive assemblies to excess moisture and other undesirable environmental conditions. The drive range shall be 50% to 150% of designed operating speed based upon the required performance. The drive assembly shall be coupled to the drive rollers with shaft mounted helical gear reducers. All exposed gears and couplings shall be enclosed in safety guards.

b. The drive assembly shall consist of a speed reducer, with an integrally mounted C-face motor and panel mounted variable frequency drive controller for belt speed adjustment.

c. The belt filter press speed reducer shall be a shaft mounted, helical type gear reducer. Worm gear type reducers are not acceptable. The speed reducer housing shall be of cast iron or fabricated steel welded construction and shall be totally enclosed, dust proof, and oil tight.

d. The integrally mounted electric motor shall be rated for a minimum of 3.0 HP and maximum speed of 1800 RPM. Motor shall provide full load torque from 10 to 100 percent of the maximum speed of the drive motor.

G. Doctor Blades and Cake Discharge

a. The belt filter press shall be provided with a doctor blade to assist the separation of cake from the belt at the point of cake discharge. The doctor blade and blade holder shall be designed with sufficient stiffness to prevent warping, bowing or distortion of the blade.

b. The doctor blades shall be reversible, replaceable, and shall be constructed of UHMW polyethylene, polyurethane, or similar material. Fiberglass reinforced plastic is not acceptable.

c. Doctor blade tensioning shall be applied by a tensioning device with provisions to adjust the force of the doctor blade against the belt. Each doctor blade assembly shall be designed to allow quick release of the doctor blade from the belt for inspection and service.

d. The belt filter press shall be equipped with a minimum 14-gauge 304L stainless steel discharge chute with a minimum 1:1 slope, to guide the discharge cake on to the sludge conveyor or disposal container. The cake discharge chute shall be mounted independently of the doctor blade assembly.

H. Belt Wash Station

a. The belt filter press shall be provided with an upper and lower belt wash station which shall clean the full width of the belts after the cake has been discharged.

b. Water at a minimum pressure of 120 psig (8.27 bar) shall be provided. The total washwater demand of the two belt wash stations combined shall not exceed 60 gpm. (3.8 lps) Water shall be filtered to 200 microns to protect nozzles from clogging. Each belt wash station shall consist of a type 304L stainless steel washwater spray pipe with replaceable spray nozzles and internal handwheel actuated wire brush to facilitate periodic cleaning of the nozzles. Belt wash spray pipe shall be manufactured by Appleton Manufacturing, or approved equal.

c. Each belt wash station shall be enclosed in a type 304L stainless steel, 14 gauge minimum, enclosure with easily replaceable Buna seals which shall contain all spray and mist.

I. Roller Assemblies

a. All rollers shall utilize interference fits between the journals/journal plates and tube, welding is not required. Bolted in place stub end roller shafts are unacceptable. The "S" & drive roll shafts shall have a minimum diameter of 10"(260mm) inside the roller and a minimum of 2.95" (75mm) journal diameter. The minimum safety factor in relation to the rollers yield point shall be 5 at a maximum loading rate of 50 PLI belt tension and a fatigue factor of 2 or greater. All rollers shall be designed to have a maximum deflection of 0.05" (1.27mm) at mid span when under maximum loading. Rollers shall have a minimum wall thickness of 0.5"(1.27mm) and be constructed of A-106 pipe or A519 mechanical tubing. Maximum loading shall be based on the maximum summation of all forces applied to the roller including, but not limited to, the forces exerted by the belt tension, drive torque and roller mass. Certified calculations shall be submitted as a part of the shop drawing submittal verifying compliance. The belt filter press manufacturer shall provide a listing of all additional loads exerted on each roll created by drive torque.

b. The perforated drum rollers shall be corrosion resistant and internally braced so as to comply with the minimum safety factor and maximum allowable deflection specified. Drum perforations shall have a diameter not less than 1.2" (30mm) and provide a minimum roller face open area of 25%.

c. All rolls shall be statically balanced and machined to ensure total concentricity. Journals shall be machined to 0.01"(.25mm) concentricity. The final assembly

process shall produce a roller journal assembly with a concentricity of 0.02"(.51mm).

d. All carbon steel rollers shall be covered to the point of insertion into the bearing housing. The drive roller shall be a minimum 1/4" Buna N rubber covered to a hardness of 79 shore A. All other rollers shall be surfaced with polyethylene at a thickness of 25 mils.

J. Bearings

1. The shafts of all rollers shall be supported by greaseable type, self-aligning, spherical roller bearings housed in a sealed, splash proof, horizontal split case, cast closed pillow block housing. The housing for all "S" rollers shall be two bolt base and two or four bolt cap. The bearing shall be attached to a turned journal shaft by means of an interference fit

2. All bearings shall have a minimum L-10 life of 500,000 hours, at a minimum belt speed of 15 feet per minute (4.57 meter per minute), calculated by using the latest ANSI/AFBMA STD. The L-10 life shall be based on the summation of all forces applied to the bearings including, but not limited to, roller mass forces and drive torque induced belt tension in addition to the 50 PLI tension set by the tensioning rollers.

3. Certified calculations, based on AFBMA ISO capacity formula shall show that all bearings comply with the specified requirements for a minimum L-10 life at the maximum loadings. Bearing housings shall be Class 25 cast iron and shall conform to ASTM A48 standards. Except for where it is necessary for the shaft to extend through the housing, the outer side of the housing shall be solid without end caps or filler plugs. The seals shall be a triple lip design and rotate with the shaft. The housings shall be clean iron phosphate and coated with a heat treated thermal plastic nylon to a thickness of 8-12 mls. All hardware shall be type 316 stainless steel unless specified otherwise.

K. Pneumatic System

1. The belt filter press shall be provided with pneumatic belt tracking and tensioning systems to ensure reliable operation. The belt tracking and tensioning systems shall be of the continuous and non-incremental tracking type. The air supply to the pneumatic tension / tracking system is 4 CFM@ 90 PSI.

2. The pneumatic control system shall consist of a gauges, valves, filters and adjustments to maintain the required belt tension and belt position on the machine. All pneumatic tubing shall be ¼" polyethylene tubing. This package shall include all controls and piping as necessary to provide a complete and operating system. The unit shall include a low pressure switch, relief valve and the necessary gauges and filters. Pneumatic cylinders shall be fiberglass bodies with chrome plated rods and stainless steel hardware.

3. Belt Tensioning / Tracking System

a. The belt tensioning / tracking system shall be capable of adjusting belt tension to a maximum of 50 lbs per linear inch of belt width and shall automatically and continuously align and maintain the belt position on the rollers during operation of the belt filter press. Belt tensioning adjustment shall be made and controlled through the use of manually operated gauges and shall be capable of adjustment while the belt filter press is operating. The belt position shall be monitored by a stainless steel sensing paddle which shall continually contact the belt edge. The sensing arm shall be linked to a position transducer which controls the tracking cylinder

b. Pneumatic cylinders shall provide the movement of the rollers to the required belt tension and in combination with the pressure and line chart.

c. One (1) limit switch shall be provided on each side of the machine to detect major misalignment of the belt and relay an alarm signal. Each limit switch shall be housed in a NEMA 4X enclosure.

L. Electrical Components

1. The belt filter press is supplied with the following NEMA 4X rated components: terminal box, belt tracking limit switch (one each side). Emergency stop trip cords (one each side), shall be mounted on each side of the belt filter press.

2. All components are wired complete to the terminal box including power leads for main belt drive. Wire runs are STO Cord and are firmly attached to the press frame.

M. System Controls

1. The belt filter press shall be supplied with a NEMA 4X stainless steel freestanding single door control panel. The control panel shall include a through door operated main disconnect that can be locked in the off position. Main control components shall consist of; variable frequency drive controller with short-circuit and overload protection for main belt drive, motor starters with short-circuit and overload protection for air compressor and wash water booster pump. Other components include control power transformer, programmable logic controller, control relays, speed control transmitters and terminal points for interconnection with ancillary equipment. Door mounted components shall consist of NEMA 4X pushbuttons, selector switches and pilot light for system control power and mushroom head emergency stop. An Operator Interface Terminal (OIT) shall be included for control and monitoring of the Belt Filter Press System. An alarm horn will be mounted for fault annunciation. The panel shall operate from a 480 VAC, 3 Phase, 60 Hz service..

2. The control panel shall be completely pre-wired and factory tested prior to shipment. Operator control functions on front of control panel shall, as a minimum, include:.

a. Start/Stop, on/off controls of

1. System Control Power*
2. Auto/Manual Control
3. Belt Tension/Tracking
4. Conveyor
5. Washwater Solenoid Valve
6. Washwater Booster Pump
7. Main Belt Drive
8. Polymer Feed Pump
9. Sludge Feed Pump
10. Alarm Control

*System Control Power and Emergency Stop will be hardwired pushbuttons

b. OIT status indication for:

1.	System Control Power	"On"
2.	System Control Power	"Reset"
3.	Auto Start	"Pre-Wash Cycle"
4.	Auto Stop	"Post-Wash Cycle"
5.	Belt Tension/Tracking	"On"
6.	Conveyor	"On"
7.	Washwater Booster Pump	"On"
8.	Washwater Solenoid	"On"
9.	Main Belt Drive	"On"
10.	Polymer Feed Pump	"On"
11.	Sludge Feed Pump	"On"

12. Alarms:

    1. Belt Limit "Fault"
    2. Low Wash water Psi "Fault"
    3. Main Drive VFD "Fault"
    4. Machine E-Stop "Fault"
    5. Conveyor Stop "Fault"

c. OIT Digital Speed, Flow Indication of:

    1. Main Belt Drive speed "FPM"
    2. Polymer Feed "GPM"
    3. Sludge Feed "GPM"

N. Machine Wiring

1. The BFP machine shall be supplied with the following NEMA 4X rated components: stainless steel terminal box, pull cord emergency stop (one each side), belt tracking limit switch (one each side), washwater low pressure switch, and washwater isolation solenoid valve.

2. All components shall be wired complete to the terminal box excluding power leads for main belt drive.

3. Wire runs will be in PVC coated rigid, conduit, non-metallic liquid tight flex and connectors, rigidly mounted to press frame.

O. Interface Requirements

1. Utilities

    a. 480 VAC, 60 Amp 3 Phase, 60 HZ service

2. Outputs

    a. Discrete - contact closure

        1. Conveyor run permit – N.O. contact, close to run
        2. Polymer feed pump run permit – N.O. contact, close to run
        3. Sludge feed pump run permit – N.O. contact, close to run

4. BFP Belt run permit – N.O. contact, close for status

b. Analog – 4 – 20 mA signal

1. Polymer feed pump – speed / flow control

2. Sludge feed pump – speed / flow control

3. Inputs

a. Discrete – contact closure

1. Conveyor on – N.O. contact close when conveyor is on

2. Polymer feed pump on – N.O. contact close when pump is on

3. Sludge feed pump on – N.O. contact close when pump is on

4. BFP Belt running – N.O. contact, when belt is on

5. BFP system fault – N.O. contact, close on alarm for status

b. Analog – 4-20mA signal

1. Polymer feed pump – speed /flow indication

2. Sludge feed pump – speed / flow indication

3. BFP Belt - Speed

P. Description of Operation

1. Emergency stop pushbuttons and pull cords will be maintained type and shall provide for hard wired instant shutdown of Belt Filter Press equipment at all times

2. Manual Mode: In manual mode system components can be jogged with their respective start pushbuttons without sequence interlocks being satisfied. To jog the respective motor the start pushbutton must be held in. Manual start sequencing of motors shall be allowed when interlocks are satisfied. Emergency stop, and belt limit alarms will always be active.

3. Auto Mode: In auto mode, start-up and shutdown can be controlled from either auto start / auto stop push buttons for an automatic sequential timed startup, or components can be controlled with their respective push buttons, interlocks must be satisfied. Operating the Auto Start pushbutton will initiate the following sequence of events:

a. Belt tensioning / tracking energizes (instantly)

b. Open washwater valve (instantly)

c. Start washwater booster pump (instantly)

d. Start sludge cake conveyor (5 second delay from auto start initiate)

e. Start belt drives (20 second delay from auto start initiate)

f. Start polymer feed pump (5 minute delay from auto start initiate)

g. Start sludge feed pump (15 second delay from polymer pump start

* Auto stop indicator light will flash while in progress and go on steady when complete.

4. Operating the Auto Stop pushbutton will initiate the following sequence of events:

a. Sludge feed pump stops (instantly)

b. Polymer feed pump stops (instantly)

c. Belt drives, washwater valve / booster pump, belt tension / tracking, and conveyor shut down (10 minute delay from auto stop initiate)

Q. Alarm

1. Alarm conditions are indicated with amber pilot lights and will cause alarm horn to sound. Alarm lights will go on steady as long as condition is still in fault condition. Operating acknowledge pushbutton will silence horn and cause indicator light to flash if condition has been cleared. Operating reset button will clear alarm indicator and allow system start-up.

2. Following conditions will immediately shutdown the complete system in auto or manual:

a. Emergency stop

b. Belt limit

c. Belt drive fail

3. Following conditions will shut down polymer and sludge feed in auto mode:

a. Low wash water pressure

b. Sludge pump fail

c. Polymer system fail

d. Conveyor fail

e. If sludge pump is not detected “on” one minute after polymer pump run confirm.

PART 3- EXECUTION

3.01 ERECTION / INSTALLATION

A. Application
Belt filter press and control panel shall be installed in complete accordance with the Manufacturer's recommendation.

a. Manufacturer's Representative for Start-up and Testing: The services of the Manufacturer's contractor's technical representative shall be provided for pre-start-up installation checks, start-up assistance, training of Owner's operating personnel, troubleshooting and testing. Manufacturer’s representative service time shall be five (5) days on site and one (1) trip.

b. Functional Test: Functional testing shall be performed for each belt filter press installed. Prior to system start-up, system components shall be inspected for proper alignment, proper connection, and satisfactory operation. The Manufacturer's representative shall inspect installation, check for lubrication and minor adjustments, provide certification that the system components have been installed correctly and are ready for operation. The performance test shall not begin until functional testing has been completed to the Owner's and Engineer's satisfaction.

c. Performance

(1) Performance testing shall be performed for the belt filter press installed. After plant start-up, the Manufacturer shall conduct a performance test using the Owner's sludge to determine the actual system operating conditions and verify that the unit meets the minimum requirements specified herein.

(2) Test procedures and polymer recommendations shall be submitted to the Owner and Engineer for review thirty (30) days prior to testing. Submit performance test data and results to the Owner and Engineer.

(3) Prior to the performance tests, the Manufacturer shall perform testing as necessary to determine and recommend the most effective type of polymer to produce the specified performance. Additional test shall be at the Manufacturer's own expense, if the prior test fails to meet the specified performance.

(4) The Owner shall provide sludge feed, water, electrical power, and sludge cake disposal necessary to conduct the performance tests. The polymers required shall be provided by the Owner at the recommendation of the belt press manufacturer.

(5) The cost of laboratory test necessary to confirm belt press performance for the initial test shall be borne by the Owner. If a retest is required, then the Manufacturer shall pay for the subsequent laboratory tests.

(6) If, after a minimum of two 6-hour test runs, in the opinion of the Owner, the system meets the minimum performance requirements specified herein, the Engineer will recommend, by letter, the official acceptance of the belt filter press. If, in the opinion of the Engineer, the performance test results do not meet the requirements specified herein, the Engineer will notify the Owner and Contractor of non-acceptable performance.

(7) In the case of non-acceptable performance, the manufacturer shall then have 60 days in which to perform at its sole expense, any supplemental testing, equipment adjustments, changes or additions and to perform a retest of the non-acceptable system.

(8) If in the opinion of the Engineer, a performance acceptance test or retest is successful and meets the requirements specified herein, the Engineer will recommend, by letter, the official acceptance of the equipment.

END OF SECTION

WASTEWATER TREATMENT PLANT 2
SOLIDS HANDLING IMPROVEMENTS

PROJECT NUMBER: WW2030

CITY OF RIO RANCHO
SANDOVAL COUNTY, NEW MEXICO
VOLUME 2 OF 2

CONSTRUCTION PLANS

MAY 2020

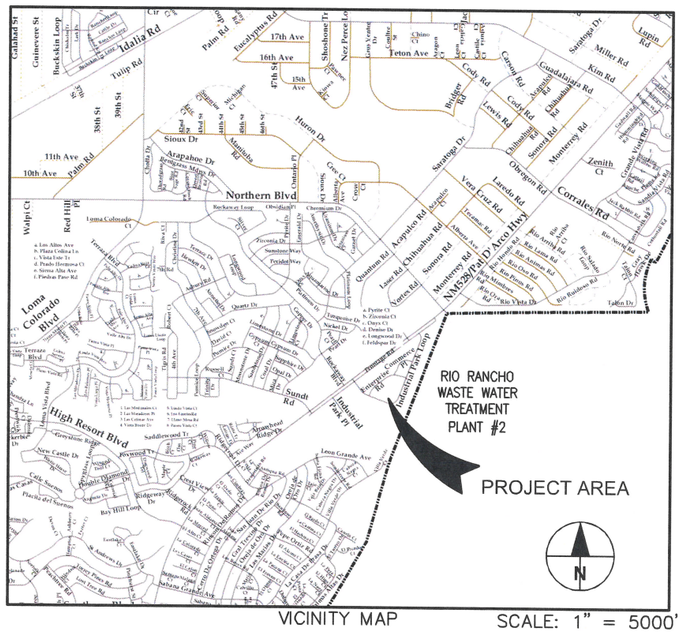

VICINITY MAP SCALE: 1" = 5000'

CITY OF RIO RANCHO: _____ DATE: 6/1/2020
DEPARTMENT OF PUBLIC WORKS
BJ GOTTLIEB PE, PUBLIC WORKS DIRECTOR

CITY OF RIO RANCHO: _____ DATE: 6/1/2020
DEPARTMENT OF UTILITIES
JIM CHIASSON PE, UTILITIES DIRECTOR

No.	DESCRIPTION	DATE	BY
1	BID SET	5/22/20	RKS
2			
3			
4			
5			
6			
7			

REVISIONS (OR CHANGE NOTICES)

Designed By: AECOM Imagine it. Delivered.
One Park Square
6501 Americas Pkwy NE, Suite 900
Albuquerque, New Mexico 87110
(505)-855-7500

Designed For: CITY OF RIO RANCHO

WASTEWATER TREATMENT PLANT 2 SOLIDS HANDLING IMPROVEMENTS

COVER SHEET

RIPAN K. SAHI
NEW MEXICO
24268
5-22-2020
PROFESSIONAL ENGINEER

PROJECT NO.	WW2030
DESIGNED BY:	RKS, REH
DRAWN BY:	CAM
CHECKED BY:	RKS, REH
DATE MODIFIED:	5-22-2020
DPW CHK:	

SHEET: G-01

DWG: L:\606\0128 Rio Rancho - Solids Dewatering Design\600-CAD-DGN\00-SHEETS\G-01.dwg USER: jesse.higgins
DATE: May 22, 2020 8:28am XREFS: RR-AECOM-PW-BDR IMAGES: images_01_defined_boundary_2020.jpg

GENERAL NOTES:

1. THE INDEX LISTS TWO OPTIONS OF BID SET DRAWINGS:
   - BASE BID SET
   - ALTERNATE BID SET
2. BASE BID SET DRAWINGS ARE NUMBERED FROM 1 THRU 55.
3. ALTERNATE BID INCLUDES DEMOLITION OF THE SECOND BELT PRESS AND INSTALLATION OF TWO NEW BELT PRESSES ALONG WITH ALL REQUIRED PIPING, BELT PRESS SUPPORT, ELECTRICAL CONDUITS AND PANELS.
4. SOME BASE BID SHEETS HAVE NOTES OR DIRECTIONS FOR ALTERNATE BID OPTION, TOO.

* ALTERNATE BID SHEETS ARE TO REPLACE THE RELEVANT SHEETS IN THE BASE BID. I.E. G-7A IS TO REPLACE G-7.

INDEX OF DRAWINGS

SHEET NUMBER	DRAWING NAME	SHEET DESCRIPTION
GENERAL		
1	G-01	COVER SHEET
2	G-02	INDEX OF DRAWINGS
3	G-03	ABBREVIATIONS AND LEGENDS
4	G-04	GENERAL NOTES
5	G-05	GENERAL NOTES
6	G-06	OVERALL SITE PLAN AND WORK LOCATION
7	G-07	PROCESS FLOW DIAGRAM
8	G-08	CODE ANALYSIS AND LIFE SAFETY
CIVIL		
9	C-01	SITE YARD PIPING PLAN
DEMOLITION		
10	D-1	DEWATERING FACILITY DEMOLITION PLANS
11	D-2	DEWATERING FACILITY DEMOLITION ELEVATIONS
12	D-3	DEWATERING FACILITY DEMOLITION SECTIONS
STRUCTURAL		
13	S-1	GENERAL STRUCTURAL NOTES 1
14	S-2	SPECIAL INSPECTION TABLES
15	S-3	SPECIAL INSPECTION TABLES
16	S-4	DEWATERING FACILITY FIRST FLOOR PLAN
17	S-5	DEWATERING FACILITY SECOND FLOOR PLAN
18	S-6	FOUNDATION SECTIONS
19	S-7	PLATFORM FRAMING PLAN AND SECTIONS
20	S-8	PLATFORM SECTIONS AND DETAILS
21	S-9	FRAMING SECTIONS
22	S-10	WALL FRAMING DETAILS
23	S-11	STRUCTURAL DETAILS
ARCHITECTURAL		
24	A-1	DEWATERING FACILITY FIRST FLOOR PLAN
25	A-2	DEWATERING FACILITY SECOND FLOOR PLAN
26	A-3	DEWATERING FACILITY EXTERIOR ELEVATIONS AND SECTION
27	A-4	DEWATERING FACILITY EXTERIOR ELEVATIONS
28	A-5	TYPICAL DETAILS
29	A-6	SECTIONS AND DETAILS
30	A-7	SCHEDULES AND DETAILS
31	A-8	CEILING PLAN
MECHANICAL		
32	DM-1	DEWATERING SYSTEM DEMOLITION PLAN
33	DM-2	DEWATERING SYSTEM DEMOLITION ELEVATION
34	M-1	GENERAL MECHANICAL NOTES, SYMOBLS, AND LEGEND
35	M-2	DEWATERING SYSTEM PLAN
36	M-3	DEWATERING SYSTEM SECTIONS
37	M-4	DEWATERING SYSTEM SECTIONS
38	M-5	NEW POLYMER SYSTEM
39	M-6	TYPICAL DETAILS
HEATING VENTILATION AND AIR CONDITIONING		
40	HV-1	MECHANICAL LEGEND, SYMBOLS, ABBREVIATIONS AND GENERAL NOTES
41	H-1	HVAC FIRST FLOOR PLAN
42	H-2	HVAC SECOND FLOOR PLAN
43	H-3	HVAC SCHEDULES AND DETAILS
ELECTRICAL		
44	DE-1	ELECTRICAL DEMOLITION PLANS
45	E-1	ELECTRICAL SYMBOLS AND LEGEND
46	E-2	ELECTRICAL SITE PLAN
47	E-3	FIRST FLOOR POWER PLAN
48	E-4	SECOND FLOOR POWER PLAN
49	E-5	FIRST FLOOR LIGHTING PLAN
50	E-6	SECOND FLOOR LIGHTING PLAN
51	E-7	RISER DIAGRAM AND SCHEDULES
INSTRUMENTATION		
52	I-01	GENERAL INSTRUMENT & CONTROL SYMBOLS
53	I-02	PROCESS & INSTRUMENTATION DIAGRAM - EXISTING
54	I-03	CONTROL P&ID
PLUMBING		
55	P-1	PLUMBING PLAN, ISOMETRICS AND DETAILS
ALTERNATE		
56	G-07A	PROCESS FLOW DIAGRAM
57	D-1A	DEWATERING FACILITY DEMOLITION PLANS
58	S-4A	DEWATERING FACILITY FIRST FLOOR PLAN ALTERNATE
59	S-5A	DEWATERING FACILITY SECOND FLOOR PLAN ALTERNATE
60	A-1A	DEWATERING FACILITY FIRST FLOOR PLAN ALTERNATE
61	A-2A	DEWATERING FACILITY SECOND FLOOR PLAN ALTERNATE
62	DM-1A	DEWATERING SYSTEM DEMOLITION PLAN ALTERNATE
63	M-2A	DEWATERING SYSTEM PLAN ALTERNATE
64	M-3A	DEWATERING SYSTEM SECTIONS ALTERNATE
65	DE-1A	DEMOLITION PLAN - ALTERNATE
66	E-3A	FIRST FLOOR POWER PLAN - ALTERNATE
67	E-7A	RISER DIAGRAM & SCHEDULES - ALTERNATE
68	I-03A	CONTROL P&ID ALTERNATE

Rio Rancho City of Vision

No.	DESCRIPTION	DATE	BY
1	BID SET	5/22/20	RKS
2			
3			
4			
5			
6			
7			

REVISIONS (OR CHANGE NOTICES)

Designed By: AECOM Imagine it. Delivered.
One Park Square
6501 Americas Pkwy NE, Suite 900
Albuquerque, New Mexico 87110
(505)-855-7500

Designed For: CITY OF RIO RANCHO

WASTEWATER TREATMENT PLANT 2 SOLIDS HANDLING IMPROVEMENTS

INDEX OF DRAWINGS

RIPAN K. SAHA NEW MEXICO 24260 PROFESSIONAL ENGINEER 5-22-2020

PROJECT NO.	WW2030
DESIGNED BY:	RKS, REH
DRAWN BY:	CAM
CHECKED BY:	RKS, REH
DATE MODIFIED:	5-22-2020
DPW CHK:	

SHEET: G-02

ABBREVIATIONS

@	AT
ABBREV	ABBREVIATION
ADD	ADDITIVE
ADD'L	ADDITIONAL
ALT	ALTERNATE/ALTERNATIVE
AL, ALUM	ALUMINUM
AC	ASBESTOS CEMENT
ACI	AMERICAN CONCRETE INSTITUTE
AISC	AMERICAN INSTITUTE OF STEEL CONSTRUCTION
AISI	AMERICAN IRON AND STEEL INSTITUTE
ASTM	AMERICAN SOCIETY OF TESTING MATERIALS
AWS	AMERICAN WELDING SOCIETY
AB	ANCHOR BOLTS
ARCH	ARCHITECTURE/ARCHITECTURAL
ASPH	ASPHALT
BP	BASE PLATE/BEARING PLATE
BM	BEAM
BRG	BEARING
BM	BENCH MARK
BIT	BITUMINOUS, BITUMASTIC
BLK	BLOCK
B/	BOTTOM OF
BLDG	BUILDING
BU	BUILT-UP
BFV	BUTTERFLY VALVE
BTWN	BETWEEN
BOT	BOTTOM
CIP	CAST IN PLACE
CI	CAST-IRON
CS	CAST-STEEL
CTR	CENTER
CTRD	CENTERED
CL	CENTER LINE
C	CHANNEL
CLR	CLEAR/CLEARANCE
COL	COLUMN
CO	CLEAN-OUT
CONC	CONCRETE
CONT	CONTINUOUS
CB	CONCRETE BEAM
CC	CONCRETE COLUMN
CM	CONCRETE MASONRY
CMU	CONCRETE MASONRY UNIT
COORD	COORDINATE
CONT	CONTINUOUS
CONN	CONNECTION
CONST	CONSTRUCTION
CJ	CONTROL JOINT
CSJ	CONSTRUCTION JOINT
CMP	CORRUGATED METAL PIPE
CF	CUBIC FEET (FOOT)
CY	CUBIC YARD
CV	CHECK VALVE
C & C	CLADDING & COMPONENTS
CORR	CITY OF RIO RANCHO
DAS	DOWEL ANCHOR STUD
DBA	DEFORMED BAR ANCHOR
DEPT	DEPARTMENT
DIA	DIAMETER
DIM	DIMENSION
DIST	DISTANCE
DN	DOWN
DR	DRAIN
DWG	DRAWING
DIAG	DIAGONAL
DET	DETAIL
DS	DIGESTED SLUDGE
DG	DIGESTER GAS
DIP	DUCTILE IRON PIPE
DWL	DOWEL

EA	EACH
EE	EACH END
EF	EACH FACE
EIFS	EXTERIOR INSULATION & FINISH SYSTEM
ES	EACH SIDE
EW	EACH WAY
ELEC	ELECTRIC/ELECTRICAL
EL, ELEV	ELEVATION, ELEVATOR
ENGR	ENGINEER
EOR	ENGINEER ON RECORD
EP	EDGE OF PAVEMENT
EQ SP	EQUAL SPACED
ESO	EMERGENCY SLUDGE OVERFLOW
EXIST	EXISTING
EXP	EXPANSION
EXT	EXTERIOR
FE	FIRE EXTINGUISHER
FS	FAR SIDE
F.S.	FLOW SWITCH
FT	FEET/FOOT
FDN	FOUNDATION
FIN	FINISH
FIN GR	FINISH GRADE
FF	FINISHED FLOOR
FL	FLANGE
FLR	FLOOR
FD	FLOOR DRAIN
FTG.	FOOTING
FP	FULL PENETRATION WELD
FV	FIELD VERIFY
GA	GAGE/GAUGE
GALV	GALVANIZED
GV	GATE VALVE
GC	GENERAL CONTRACTOR
GEN	GENERAL
GS	GALVANIZED STEEL
GL	GRID LINE
HORIZ	HORIZONTAL
HAS	HEADED ANCHOR STUD
HCL	HYDROCHLORIC ACID
HS	HEATED SLUDGE
HSS	HOLLOW STRUCTURAL SECTION
HT	HEIGHT
HSB	HIGH STRENGTH BOLT (A-325)
HVAC	HEATING VENTILATION & AIR CONDITIONING
HWL	HIGH WATER LINE
I	MOMENT OF INERTIA
IBC	INTERNATIONAL BUILDING CODE
IBC	INTERMEDIATE BULK CONTAINER
IN	INCH
ID	INSIDE DIAMETER
INT	INTERIOR
INV	INVERT
IF	INSIDE FACE
JT	JOINT
JST	JOIST
K	KIP
KWY	KEYWAY
LDG	LANDING
LGTH	LENGTH
LT WT	LIGHT WEIGHT
LG	LONG
L	ANGLE
LLH	LONG LEG HORIZONTAL
LLV	LONG LEG VERTICAL
LOTO	LOCK OUT TAG OUT

MID	MIDDLE
MFR	MANUFACTURE/MANUFACTURER
MB	MASONRY BEAM, MACHINE BOLT
MO	MASONRY OPENING
MATL	MATERIAL
MAX	MAXIMUM
MECH	MECHANICAL
MIN	MINIMUM
MISC	MISCELLANEOUS
MPH	MILES PER HOUR
MET	METAL
MWFRS	MAIN WIND FORCE RESISTING SYSTEM
M	MOTORIZED
NS	NEAR SIDE
NIC	NOT IN CONTRACT
NTS	NOT TO SCALE
NO	NUMBER
NG	NATURAL GAS
OC	ON CENTERS
OPNG	OPENING
OF	OUTSIDE FACE
OD	OUTSIDE DIAMETER
PEN	PENETRATION
PCF	POUNDS PER CUBIC FEET
PAR	PARALLEL
PJF	PREMOLDED BITUMINOUS JOINT FILLER
PL	PLATE
PLY	PLYWOOD
PLF	POUNDS PER LINEAR FOOT
PSF	POUNDS PER SQUARE FOOT
PSI	POUNDS PER SQUARE INCH
PC	PRECAST CONCRETE
PREFAB	PREFABRICATED
PT	PRESSURE TREATED
PVC	POLYVINYL CHLORIDE
PV	PLUG VALVE
PS	PIPE SUPPORT
PW	PLANT WATER
P&VRV	PRESSURE & VACUUM RELIEF VALVE
PSWS	PUMP SEAL WATER SUPPLY
PSDR	PUMP SEAL DRAIN
PG	PRESSURE GAUGE
REF	REFERENCE
REINF	REINFORCING
RCP	REINFORCED CONCRETE PIPE
REQ'D	REQUIRED
RW	RETAINING WALL
RD	ROOF DRAIN
SCHED	SCHEDULE
SPC	SPACE/SPACES
SPECS	SPECIFICATIONS
SQ	SQUARE
SS	STAINLESS STEEL
STD	STANDARD
ST/STL	STEEL
SYM	SYMMETRICAL
STR	STRUCTURE
STRUCT	STRUCTURAL
SPCG	SPACING
SIM	SIMILAR
STIFF	STIFFENER

TOC	TOP OF CONCRETE
TOP	TOP OF PILE
TEMP	TEMPORARY
TENS	TENSION
THK	THICK
THD	THREAD/THREADED
TB	TIE BEAM
TOL	TOLERANCE
T&B	TOP AND BOTTOM
TOS	TOP OF STEEL
TDS	TURN DOWN SLAB
TL	TRANSMISSION LINE
TYP	TYPICAL
TS	TUBE STEEL/THICKENED SLAB
TG	TEMPERATURE GAUGE
UNO	UNLESS NOTED OTHERWISE (ALSO UON)
UV	ULTRAVIOLET
VERT	VERTICAL
VOL	VOLUME
VPG	VACUUM & PRESSURE GAUGE COMBINATION
WC	WELL COLLECTOR
WF	WALL FOOTING
WP	WATERPROOF
WS	WELDED STUD
WWF	WELDED WIRE FABRIC
WH	WEEP HOLE
WT	WEIGHT, STRUCTURAL TEE SECTION
W	WIDE FLANGE SECTION
W/	WITH
W/O	WITHOUT
WD	WOOD
WP	WORKING POINT
WW	WASHWATER LINE
#	POUNDS
+/-	PLUS OR MINUS
℄	CENTER LINE
ℙ	PROPERTY LINE, PLATE
Ø	DIAMETER
&	AND
Sp	SECTION MODULUS
Ip	MOMENT OF INERTIA

NOTE: THIS IS A MASTER SYMBOLS AND ABBREVIATION DRAWING. NOT ALL SYMBOLS AND ABBREVIATIONS MAY BE USED.

LEGEND:

A | SECTION/DETAIL
S-1 | Scale NTS

DETAIL TITLES

PROJECT NORTH/TRUE NORTH

DETAIL AREA/REFERENCE

SECTION

ELEV
ELEVATION (HEIGHT)

REVISION

KEYED NOTE

GRID NUMBER

ROOM NAME
XX-XX
ROOM NUMBER

DOOR NUMBER

WALL TYPE

WINDOW AND LOUVER TYPE

MATERIALS LEGEND:

- ASPHALT
- BATT INSULATION
- BRICK MASONRY
- CHECKERED PLATE
- COHESIVE SOIL
- CONCRETE
- CONCRETE MASONRY
- DEMOLITION
- EARTH
- FLOWABLE FILL
- GRANULAR FILL
- GRATING (SECTION)
- GRATING (PLAN)
- GYPSUM BOARD
- METAL
- PLYWOOD
- RIGID INSULATION
- RIPRAP
- SAND OR GROUT
- WOOD – CONTINUOUS
- WOOD BLOCKING

No.	DESCRIPTION	DATE	BY
1	BID SET	5/22/20	RKS
2			
3			
4			
5			
6			
7			

REVISIONS (OR CHANGE NOTICES)

Designed By: AECOM Imagine it. Delivered. 6501 Americas Pkwy NE, Suite 900 Albuquerque, New Mexico 87110 (505)-855-7500

Designed For: CITY OF RIO RANCHO

WASTEWATER TREATMENT PLANT 2 SOLIDS HANDLING IMPROVEMENTS

ABBREVIATIONS AND LEGENDS

RIPAN K. SAHA NEW MEXICO 24280 PROFESSIONAL ENGINEER 5-22-2020

PROJECT NO.	WW2030
DESIGNED BY:	RKS, REH
DRAWN BY:	CAM
CHECKED BY:	RKS, REH
DATE MODIFIED:	5-22-2020
DPW CHK:	

SHEET: G-03

DWG: L:\605617\06 Rio Rancho - Solids Dewatering Design\WW-CAD-GIS\WW-CAD\WW-SHEETS\G-03.dwg USER: jesse.higgins
DATE: May 22, 2020 11:21pm XREFS: WW-TITLE.dwg WW-BORDER.dwg MACRO: Image_In_Centered_Block_300dpi.lsp

GENERAL NOTES

1. ALL CONSTRUCTION SHALL BE PERFORMED IN ACCORDANCE WITH 1) THE PROJECT CONSTRUCTION PLANS, 2) THE PROJECT SPECIFICATIONS, 3) THE CURRENT EDITION OF THE CITY OF RIO RANCHO STANDARD DETAILS, 4) THE CURRENT EDITION OF THE NMDOT STANDARD SPECIFICATIONS FOR HIGHWAY AND BRIDGE CONSTRUCTION, AND 5) THE NEW MEXICO STANDARD SPECIFICATIONS FOR PUBLIC WORKS CONSTRUCTION AND DETAILS, AS PREPARED BY THE NEW MEXICO CHAPTER, AMERICAN PUBLIC WORKS ASSOCIATION AND ADDENDUM. IN THE CASE OF CONFLICTING SPECIFICATIONS, THE CITY OF RIO RANCHO WILL DETERMINE WHICH SPECIFICATION GOVERNS.

2. THE CONTRACTOR AGREES TO ASSUME THE SOLE AND COMPLETE RESPONSIBILITY FOR THE JOB SITE CONDITIONS DURING THE COURSE OF CONSTRUCTION OF THE PROJECT, INCLUDING SAFETY OF ALL PERSONS AND PROPERTY. THIS REQUIREMENT SHALL APPLY CONTINUOUSLY AND NOT BE LIMITED TO NORMAL WORKING HOURS, AND THE CONTRACTOR SHALL DEFEND, INDEMNIFY AND HOLD THE CITY AND ENGINEER HARMLESS FROM ANY AND ALL LIABILITY, REAL OR ALLEGED, IN CONNECTION WITH THE PERFORMANCE OF THE WORK ON THIS PROJECT, EXCEPT FOR LIABILITY ARISING FROM THE SOLE NEGLIGENCE OF THE CITY OR ENGINEER.

3. NO MODIFICATIONS TO THESE PLANS SHALL BE MADE WITHOUT THE WRITTEN CONSENT OF THE CITY, ENGINEER, AND ALL APPROVAL SIGNATORIES. THE ENGINEER SHALL NOT BE RESPONSIBLE FOR CONSTRUCTION METHODS OR TECHNIQUES OR FOR THE PROSECUTION OF THE WORK AS SHOWN ON THESE PLANS. THE ENGINEER SHALL NOT BE HELD RESPONSIBLE FOR THE ACTS OR OMISSIONS OF THE CONTRACTOR, SUBCONTRACTORS, OR OTHER PERSONS PERFORMING ANY WORK, AS SHOWN IN THE PROJECT CONTRACT DOCUMENTS.

4. A RIGHT-OF-WAY USE PERMIT AND TRAFFIC CONTROL PLAN (TCP) ARE REQUIRED FOR ALL WORK PERFORMED WITHIN THE PUBLIC RIGHT-OF-WAY. PROVISIONS CONTAINED WITHIN CHAPTER 96 OF THE CITY OF RIO RANCHO MUNICIPAL CODE SHALL GOVERN. ALL CONSTRUCTION SIGNING, BARRICADING, AND CHANNELIZATION DEVICES SHALL CONFORM TO THE LATEST EDITION OF THE MANUAL ON UNIFORM TRAFFIC CONTROL DEVICES (MUTCD). THE CONTRACTOR IS RESPONSIBLE FOR THE SETUP AND MAINTENANCE OF ALL TRAFFIC CONTROL DEVICES. ANY MODIFICATIONS TO THE APPROVED TRAFFIC CONTROL PLAN MUST BY APPROVED BY THE CITY PRIOR TO ANY CHANGES BEING IMPLEMENTED. A TRAFFIC CONTROL SUPERVISOR MUST BE AVAILABLE FOR THE DURATION OF THE PROJECT 24 HOURS A DAY AND SEVEN DAYS A WEEK. ACCESS TO RESIDENTS AND BUSINESSES MUST BE MAINTAINED AT ALL TIMES.

5. THE CONTRACTOR SHALL DESIGNATE AT LEAST ONE EMERGENCY CONTACT PERSON, AND SHALL PROVIDE TELEPHONE NUMBERS WHERE THIS PERSON CAN BE CONTACTED AT ANY TIME. THIS INFORMATION SHALL BE PROVIDED TO THE CITY'S PROJECT MANAGER.

6. THE CONTRACTOR IS RESPONSIBLE FOR OBTAINING ALL NECESSARY PERMITS FROM ALL JURISDICTIONAL AUTHORITIES BEFORE THE START OF CONSTRUCTION.

7. ALL WORK ON THIS PROJECT SHALL BE PERFORMED IN ACCORDANCE WITH APPLICABLE FEDERAL, STATE, AND LOCAL LAWS, RULES AND REGULATIONS CONCERNING CONSTRUCTION SAFETY, HEALTH, AND ENVIRONMENTAL PROTECTION.

8. EXISTING SITE IMPROVEMENTS WHICH ARE DAMAGED OR DISPLACED BY THE CONTRACTOR SHALL BE REMOVED AND REPLACED BY THE CONTRACTOR AT THE CONTRACTOR'S OWN EXPENSE. THE WORK SHALL BE APPROVED BY THE CITY BEFORE CONSTRUCTION OF THE REPAIRS. REPAIRS MUST BE ACCEPTED BY THE CITY BEFORE FINAL PAYMENT.

9. THE CONTRACTOR SHALL ONLY UTILIZE THE DESIGNATED STAGING AREAS FOR STORAGE OF ALL EQUIPMENT AND MATERIALS. THE CITY ASSUMES NO RESPONSIBILITY OR LIABILITY FOR THE CONTRACTOR'S EQUIPMENT AND MATERIAL IN THE STAGING AREA. SECURITY SHALL BE THE SOLE RESPONSIBILITY OF THE CONTRACTOR. IF NO STAGING AREA IS DESIGNATED ON THESE PLANS, AN OFFSITE STAGING AREA SHALL BE PROVIDED BY THE CONTRACTOR AT THE CONTRACTOR'S EXPENSE, OR THE CONTRACTOR MAY NEGOTIATE WITH THE CITY TO USE AN ONSITE AREA.

10. UNLESS OTHERWISE NOTED, ALL ROADWAY STATIONING IS ALONG THE CENTERLINE OF THE ROADWAY RIGHT-OF-WAY.

11. UNLESS OTHERWISE NOTED, STATIONING OF CHANNELS AND/OR PIPES IN DRAINAGE EASEMENTS IS ALONG THE CENTERLINE OF THE CHANNEL/PIPE.

12. THE CONTRACTOR SHALL BE RESPONSIBLE FOR DETERMINING, IN ADVANCE OF THEIR CONSTRUCTION OPERATIONS, IF OVERHEAD UTILITY LINES, SUPPORT STRUCTURES, POLES, GUYS, ETC., ARE AN OBSTRUCTION TO CONSTRUCTION OPERATIONS. IF ANY OBSTRUCTION IS EVIDENT, THE CONTRACTOR SHALL BE RESPONSIBLE FOR COORDINATING WITH THE APPROPRIATE UTILITY OWNER TO REMOVE OR SUPPORT THE UTILITY OBSTRUCTION. ALL COSTS FOR THESE REQUIREMENTS ARE INCIDENTAL TO THE CONTRACT.

13. FACILITIES WHICH ARE NOT SPECIFICALLY LOCATED WITH ACTUAL VERTICAL AND HORIZONTAL CONTROLS ON THE CONSTRUCTION DOCUMENTS, ARE SHOWN APPROXIMATE AND IN ACCORDANCE WITH THE BEST AVAILABLE INFORMATION PROVIDED BY VARIOUS OWNERS OF THE FACILITIES, AND SUPPLEMENTED BY VISUAL SURFACE INFORMATION WHERE APPROPRIATE. ACCURACY, LOCATION, AND COMPLETENESS OF THIS INFORMATION IS THE SOLE RESPONSIBILITY OF THE CONTRACTOR AND SHOULD BE VERIFIED, BY ANY MEANS NECESSARY, BEFORE THE INITIATION OF CONSTRUCTION. SHOULD A CONFLICT EXIST, THE CONTRACTOR SHALL NOTIFY THE CITY, ENGINEER, AND THE CITY'S PROJECT MANAGER IMMEDIATELY.

14. IT IS MANDATORY THAT A PRECONSTRUCTION MEETING BE HELD BEFORE COMMENCING CONSTRUCTION. THE CONTRACTOR IS RESPONSIBLE FOR CONTACTING THE CITY'S PROJECT MANAGER TO DETERMINE THE TIME AND LOCATION OF THE PRECONSTRUCTION MEETING.

15. AT THE PRECONSTRUCTION MEETING, THE CONTRACTOR SHALL SUBMIT A DETAILED CONSTRUCTION SCHEDULE TO THE CITY'S PROJECT MANAGER. THE SCHEDULE WILL BE UPDATED ON A MONTHLY BASIS AND SUBMITTED WITH THE MONTHLY INVOICE.

16. ANY WORK PERFORMED WITHOUT THE APPROVAL OF THE CITY OF RIO RANCHO AND/OR ALL WORK AND MATERIALS NOT IN CONFORMANCE WITH THE SPECIFICATIONS IS SUBJECT TO REMOVAL AND REPLACEMENT AT THE CONTRACTOR'S EXPENSE.

17. THE CONTRACTOR SHALL CONTACT NM 811 AT 1-800-321-2537 FOR UTILITY SPOTS IN ACCORDANCE WITH APPLICABLE STATE LAW.

18. THE CONTRACTOR SHALL CONFINE THEIR WORK TO WITHIN THE CONSTRUCTION LIMITS AND/OR PUBLIC RIGHT-OF-WAY TO PRESERVE EXISTING VEGETATION, LANDSCAPING, AND PRIVATE PROPERTY. APPROVAL OF THESE PLANS DOES NOT GIVE OR IMPLY ANY PERMISSION TO TRESPASS OR WORK ON PRIVATE PROPERTY. PERMISSION MUST BE GRANTED IN WRITING BY THE OWNER OF THAT PROPERTY.

19. IT IS THE SOLE RESPONSIBILITY OF THE CONTRACTOR TO KEEP THE JOB SITE FREE FROM TRASH ON A DAILY BASIS, AND ALL MATERIALS WILL BE NEATLY ORGANIZED. TRASH AND/OR NON-USED MATERIALS SHALL NOT BE BURIED ONSITE.

20. THE CONTRACTOR SHALL PARK EQUIPMENT AND VEHICLES SO AS NOT TO INTERFERE WITH NORMAL ACTIVITIES OF RESIDENTS, OTHER CONTRACTORS, OR EMERGENCY SERVICES.

21. THE CONTRACTOR WILL PROVIDE CONSTRUCTION STAKING UTILIZING APPROVED CONSTRUCTION PLANS, THE APPROPRIATE RIGHT-OF-WAY MAPS, RECORDED PLATS, AND CITY OF RIO RANCHO STANDARD DETAILS. EACH REVISION TO THE PLANS SHALL BE RECORDED IN THE PLAN REVISION BLOCK. PLANS SHALL INCLUDE A LOCATION MAP WITH LEGAL DESCRIPTION(S) AND LOCATION GRID.

22. THE CONTRACTOR SHALL MAINTAIN AN UP-TO-DATE AND ACCURATE SET OF WORKING RECORD DRAWINGS, REDLINED DRAWINGS, IN ACCORDANCE WITH THE CITY OR RIO RANCHO'S DEVELOPMENT PROCESS MANUAL (DPM) CHAPTER II.7. THESE WORKING RECORD DRAWINGS SHALL REFLECT ALL APPROVED CHANGES TO THE ORIGINAL PLANS THROUGHOUT THE CONSTRUCTION PROCESS. AT THE COMPLETION OF CONSTRUCTION, THE CONTRACTOR SHALL SUBMIT THE WORKING RECORD DRAWINGS AS OUTLINED IN THE CITY OR RIO RANCHO'S DPM CHAPTER II.7. ALSO, THE CONTRACTOR SHALL ENSURE THAT ALL SUBMITTALS, PERMITTING, AND CONSTRUCTION ACTIVITIES ARE IN ACCORDANCE WITH THE CITY OR RIO RANCHO'S DPM AND APPLICABLE ORDINANCES. ALL COSTS FOR THESE REQUIREMENTS ARE INCIDENTAL TO THE CONTRACT.

23. NO WORK SHALL BE PERFORMED IN A FLOODPLAIN WITHOUT WRITTEN AUTHORIZATION FROM THE CITY'S FLOODPLAIN MANAGER.

24. ANY WORK PERFORMED IN A DRAINAGE WAY, CHANNEL, ARROYO, OR FLOODPLAIN MUST BE PROTECTED BY THE MEANS IDENTIFIED IN THE TEMPORARY EROSION CONTROL AND SEDIMENT PLANS ACCEPTED BY THE CITY.

25. VIBRATION MONITORING WILL BE AT THE CONTRACTOR'S DISCRETION AND INCIDENTAL TO THE CONTRACT.

26. ONCE SHUT-DOWN HAS BEEN ACHIEVED ON ANY SECTION OF THE SYSTEM, THE WORK OF THE CONTRACTOR SHALL PROCEED IN A CONTINUOUS UNINTERRUPTED MANNER UNTIL WORK IS COMPLETE.

SOILS

1. UNLESS OTHERWISE SPECIFIED SUBGRADE SOILS AND STRUCTURAL FILL MATERIALS SHALL BE COMPACTED TO THE FOLLOWING PERCENTAGES OF THE ASTM D-1557 MAXIMUM DENSITY.

MATERIALS	PERCENT (%) COMPACTION
STRUCTURAL FILL IN THE BUILDING AREA	95
SUB BASE FOR SLAB SUPPORT	95
MISCELLANEOUS BACKFILL BELOW STRUCTURAL FILL OR ROAD	95
MISCELLANEOUS BACKFILL BELOW UNPAVED, NON-BUILDING AREAS	90
ROAD SUB GRADE	95
SIDEWALK SUB GRADE	95
CURB AND GUTTER SUBGRADE	95
ARROYOS	90

EROSION CONTROL/ENVIRONMENTAL PROTECTION/STORM WATER POLLUTION PREVENTION PLAN

1. THE CONTRACTOR SHALL BE RESPONSIBLE FOR FULFILLING ALL NECESSARY NATIONAL POLLUTANT DISCHARGE ELIMINATION SYSTEM (NPDES) REQUIREMENTS INCLUDING, BUT NOT LIMITED TO, OBTAINING AN NPDES PERMIT BEFORE CONSTRUCTION, FILLING OUT THE NOTICE OF INTENT (NOI) APPLICATION, AND FILLING OUT THE NOTICE OF TERMINATION (NOT) APPLICATION. THE CONTRACTOR SHALL ALSO BE RESPONSIBLE FOR THE IMPLEMENTATION OF AND INSPECTION REPORTS FOR THE STORM WATER POLLUTION PREVENTION PLAN (SWPPP). THE CONTRACTOR SHALL SUBMIT THE SWPPP WITH THE PROPOSED CONSTRUCTION STAGING AREA AND TEMPORARY SANITARY FACILITIES CLEARLY SHOWN. ANY CHECK DAMS, SILT FENCES, OR OTHER BEST MANAGEMENT PRACTICES (BMP) THAT ARE REQUIRED IN THE APPROVED SWPPP SHALL BE INCLUDED IN AND ARE INCIDENTAL TO THE SWPPP BID AMOUNT.

2. THE CONTRACTOR IS REQUIRED TO KEEP A CURRENT COPY OF THE SWPPP AT THE CONSTRUCTION SITE OR AT AN EASILY ACCESSIBLE LOCATION SO THAT IT CAN BE MADE AVAILABLE AT THE TIME OF AN ONSITE INSPECTION OR UPON REQUEST BY THE EPA; A STATE, TRIBAL, OR LOCAL AGENCY APPROVING STORM WATER MANAGEMENT PLANS; THE OPERATOR OF A STORM SEWER SYSTEM RECEIVING DISCHARGES FROM THE SITE; OR REPRESENTATIVES OF THE U.S. FISH AND WILDLIFE SERVICE (USFWS) OR THE NATIONAL MARINE FISHERIES SERVICE (NMFS).

3. THE CONTRACTOR SHALL CONFORM TO ALL CITY, COUNTY, STATE AND FEDERAL DUST AND EROSION CONTROL REGULATIONS. THE CONTRACTOR SHALL PREPARE AND OBTAIN ANY NECESSARY DUST OR EROSION CONTROL PERMITS FROM THE REGULATORY AGENCIES.

4. THE CONTRACTOR SHALL EITHER PROMPTLY REMOVE ANY MATERIAL EXCAVATED WITHIN THE PUBLIC RIGHT-OF-WAY OR INSTALL BMPS ACCORDING TO NPDES REQUIREMENTS TO PREVENT DISCHARGE OF EXCAVATED MATERIAL WITHIN THE PUBLIC RIGHT-OF-WAY DURING A RAIN OR WIND EVENT. ALL COSTS FOR THESE REQUIREMENTS ARE INCIDENTAL TO THE CONTRACT.

5. THE CONTRACTOR SHALL IMPLEMENT THE APPROVED SWPPP AND ENSURE THAT NO SOIL ERODES FROM THE SITE INTO PUBLIC RIGHT-OF-WAY OR ONTO PRIVATE PROPERTY.

6. THE CONTRACTOR SHALL MITIGATE EROSION OF TEMPORARY OR PERMANENT DIRT SWALES BY INSTALLING BMPS IDENTIFIED IN THE APPROVED SWPPP IN THE SWALES PERPENDICULAR TO THE DIRECTION OF FLOW, AND AT INTERVALS AS SPECIFIED IN THE SWPPP.

7. CONSTRUCTION AREAS SHALL BE WATERED FOR DUST CONTROL IN COMPLIANCE WITH GOVERNMENT ORDINANCES. THE CONTRACTOR SHALL BE RESPONSIBLE FOR LOCATING AND SUPPLYING WATER AS REQUIRED. WATERING, AS REQUIRED FOR CONSTRUCTION AND DUST CONTROL, SHALL BE CONSIDERED INCIDENTAL TO CONSTRUCTION AND NO MEASUREMENT OR PAYMENT SHALL BE MADE THEREFORE.

8. ANY AREAS DISTURBED BY CONSTRUCTION AND NOT COVERED BY LANDSCAPING OR AN IMPERVIOUS SURFACE SHALL BE RE-VEGETATED WITH NATIVE GRASS SEEDING. WHEN CONSTRUCTION ACTIVITIES CEASE AND EARTH DISTURBING ACTIVITIES WILL NOT RESUME WITHIN 14 DAYS, STABILIZATION MEASURES MUST BE INITIATED. UNLESS INDICATED OTHERWISE ON THESE PLANS OR ON THE LANDSCAPING PLAN, NATIVE GRASS SEEDING SHALL BE IN ACCORDANCE WITH SECTION 1012 OF THE NEW MEXICO STANDARD SPECIFICATIONS FOR PUBLIC WORKS CONSTRUCTION, APWA NM CHAPTER, CURRENT EDITION.

9. ALL WASTE PRODUCTS FROM THE CONSTRUCTION SITE, INCLUDING ITEMS DESIGNATED FOR REMOVAL, CONSTRUCTION WASTE, CONSTRUCTION EQUIPMENT WASTE PRODUCTS (OIL, GAS, TIRES, ETC.) GARBAGE, GRUBBING, EXCESS CUT MATERIAL, VEGETATIVE DEBRIS, ETC. SHALL BE APPROPRIATELY DISPOSED OF OFFSITE AT NO ADDITIONAL COST TO THE CITY. IT SHALL BE THE CONTRACTOR'S RESPONSIBILITY TO OBTAIN PERMITS REQUIRED TO HAUL OR DISPOSE OF WASTE PRODUCTS. IT SHALL BE THE CONTRACTOR'S RESPONSIBILITY TO ENSURE THAT THE WASTE DISPOSAL SITE COMPLIES WITH GOVERNMENT REGULATIONS REGARDING THE ENVIRONMENT, ENDANGERED SPECIES, AND ARCHAEOLOGICAL RESOURCES.

10. THE CONTRACTOR SHALL BE RESPONSIBLE FOR THE CLEANUP AND REPORTING OF SPILLS OF HAZARDOUS MATERIALS ASSOCIATED WITH THE CONSTRUCTION SITE. HAZARDOUS MATERIALS INCLUDE GASOLINE, DIESEL FUEL, MOTOR OIL, SOLVENTS, CHEMICALS, PAINTS, ETC. WHICH MAY BE A THREAT TO THE ENVIRONMENT. THE CONTRACTOR SHALL REPORT THE DISCOVERY OF PAST OR PRESENT SPILLS TO THE NEW MEXICO ENVIRONMENT DEPARTMENT EMERGENCY RESPONSE TEAM AT (505) 827-9329.

11. THE CONTRACTOR SHALL COMPLY WITH ALL APPLICABLE REGULATIONS CONCERNING SURFACE AND UNDERGROUND WATER. CONTACT WITH SURFACE WATER BY CONSTRUCTION EQUIPMENT AND PERSONNEL SHALL BE MINIMIZED. EQUIPMENT MAINTENANCE AND REFUELING OPERATIONS SHALL BE PERFORMED IN AN ENVIRONMENTALLY SAFE MANNER IN COMPLIANCE WITH GOVERNMENT REGULATIONS.

12. WHERE STORM INLETS ARE SUSCEPTIBLE TO INFLOW OF SILT OR DEBRIS FROM CONSTRUCTION ACTIVITIES, PROTECTION SHALL BE PROVIDED ON THEIR UPSTREAM SIDE UTILIZING BMPS ACCORDING TO NPDES REQUIREMENTS. ALL COSTS FOR THESE REQUIREMENTS ARE INCIDENTAL TO THE CONTRACT.

13. STORM WATER POLLUTION PREVENTION PLANS (SWPPP) AND ACCOMPANYING FEDERAL EPA ADMINISTRATIVE PROCEDURES SHALL MEET THE CITY OF RIO RANCHO GUIDELINES AND PROCEDURES OUTLINED IN THE CURRENT ADDITION OF THE NEW MEXICO STATE HIGHWAY AND TRANSPORTATION DEPARTMENT STORM WATER MANAGEMENT GUIDELINES FOR CONSTRUCTION AND INDUSTRIAL ACTIVITIES MANUAL.

14. THE CONTRACTOR SHALL PROVIDE ADEQUATE MEANS FOR CLEANING TRUCKS AND/OR OTHER EQUIPMENT OF MUD BEFORE ENTERING PUBLIC STREETS. IT IS THE CONTRACTOR'S RESPONSIBILITY TO CLEAN STREETS AND TAKE WHATEVER MEASURES ARE NECESSARY TO ENSURE THAT ALL ROADS ARE MAINTAINED IN A CLEAN, MUD AND DUST-FREE CONDITION AT ALL TIMES.

15. NO WORK MAY BEGIN IN A AN ARROYO OR OTHER DRAINAGE WAY UNTIL AUTHORIZATION HAS BEEN PROVIDED BY THE U.S. ARMY CORP. OF ENGINEERS AND THE CITY OF RIO RANCHO FLOOD PLAIN MANAGER.

WASTEWATER GENERAL NOTES

1. SEWER/WATER LINES SHALL BE PLACED IN SEPARATE TRENCHES AT A DISTANCE OF 15 FEET TYPICALLY OR A MINIMUM OF 10 FEET APART HORIZONTALLY. THE WATER LINE SHALL BE PLACED A MINIMUM OF 1.5 FEET HIGHER IN ELEVATION THAN THE SEWER LINE. AT ALL CROSSINGS OF WATER AND SEWER LINES, THE WATER LINE SHALL BE A MINIMUM OF 1.5 FEET HIGHER THAN THE SEWER LINE OR THE SEWER LINE SHALL BE C-900 PRESSURIZED PIPE.

2. IT WILL BE THE CONTRACTOR'S SOLE RESPONSIBILITY TO PROTECT AND MAINTAIN IN SERVICE ALL EXISTING UTILITIES. THE CONTRACTOR SHALL ADEQUATELY SUPPORT AND PROTECT EXISTING UTILITIES AFFECTED BY THE CONTRACTOR'S TRENCHING ACTIVITY. IN THE EVENT THAT EXISTING UTILITIES ARE DAMAGED BY THE CONTRACTOR'S OPERATIONS, THE CONTRACTOR SHALL ARRANGE FOR AND COORDINATE WITH THE PROJECT MANAGER, PROMPT REPAIR BY THE RESPECTIVE UTILITY AND SHALL BEAR THE COST OF THE REPAIRS.

3. THE CITY OF RIO RANCHO SHALL APPROVE MATERIAL SUBMITTALS BEFORE CONSTRUCTION

4. PRIOR TO THE SEWER LINE INSTALLATION, THE FOLLOWING CONDITIONS WILL OCCUR:

   A) THE SEWER LINE ROUTE WILL BE CLEARED AND GRUBBED AND THEN GRADED TO PLAN ELEVATION

   B) THE SEWER LINE WILL BE STAKED WHEN OUTSIDE AN AREA WITH CURB AND GUTTER

5. ALL FORCEMAIN SEWER LINES MUST HAVE MARKER BALLS PER THE CITY OF RIO RANCHO STANDARD DRAWINGS. TRACER WIRE SHALL BE INSTALLED IF REQUIRED BY THE CITY'S PROJECT MANAGER.

6. THE CITY OF RIO RANCHO UTILITIES OPERATIONS DIVISION SHALL BE THE ONLY PERSONNEL AUTHORIZED TO OPERATE EXISTING VALVES, ETC. FOR CONSTRUCTION PURPOSES. ALL SHUTOFFS MUST BE COORDINATED WITH THE CITY'S PROJECT MANAGER SEVEN (7) DAYS BEFORE TO PROPOSED SHUTOFF AND SHALL COMPLY WITH THE ACCEPTED SHUTOFF PLAN.

7. 30 DAYS FOLLOWING INSTALLATION AND BACKFILL OF SEWER LINES, A DEFLECTION TEST USING A HAND PULLED MANDREL SHALL BE PERFORMED IN THE PRESENCE OF THE CITY'S INSPECTOR. ALL COSTS FOR THESE REQUIREMENTS ARE INCIDENTAL TO THE CONTRACT.

8. AIR TESTING OF SEWER LINES AND HYDROSTATIC TESTING OF FORCE MAINS SHALL BE CONDUCTED IN THE PRESENCE OF THE CITY'S INSPECTOR. ALL COSTS FOR THESE REQUIREMENTS ARE INCIDENTAL TO THE CONTRACT.

9. ALL SEWER SERVICE LINES SHALL BE INSPECTED BY TV CAMERA AND VIDEOED THEN PROVIDED TO THE CITY'S INSPECTOR FOR REVIEW BEFORE ACCEPTANCE BY THE CITY. IN THE EVENT THAT THE FIRST INSPECTION OR SUBSEQUENT INSPECTIONS AFTER THAT DO NOT PASS, THE CONTRACTOR WILL BE REQUIRED TO PERFORM ADDITIONAL INSPECTIONS OF THE SEWER SERVICE LINES USING A TV CAMERA AT THE CONTRACTOR'S EXPENSE.

10. MANHOLES SHALL MEET THE CITY OF RIO RANCHO STANDARDS EXCEPT THAT THERE SHALL BE NO LADDER RUNGS INSTALLED.

11. THE CONTRACTOR IS RESPONSIBLE FOR TESTING OF ALL FORCE MAIN LINES, INCLUDING BUT NOT LIMITED TO HYDROSTATIC AND BACTERIA TESTING, DISINFECTING, AND FLUSHING. ALL COSTS FOR THESE REQUIREMENTS ARE INCIDENTAL TO THE CONTRACT.

12. IF BYPASS PUMPING IS REQUIRED, THEN A BYPASS PUMPING PLAN MUST BE SUBMITTED TO THE CITY'S PROJECT MANAGER, FOR ACCEPTANCE, SEVEN (7) DAYS BEFORE BYPASS PUMPING BEGINS.

13. THE CONTRACTOR SHALL MARK THE TOP OF THE CURB AND PAN OF THE GUTTER WITH "S" FOR SANITARY SEWER FOLLOWING SERVICE INSTALLATION AND BEFORE FINAL ACCEPTANCE.

14. MANHOLES SHALL BE RAISED TO SURFACE COURSE OF PAVEMENT. CIRCULAR CONCRETE COLLARS SHALL BE CONSTRUCTED TO SURFACE ELEVATION.

15. NO BRICKS SHALL BE USED TO ADJUST MANHOLES TO FINISHED GRADE.

RioRancho City of Vision

No.	DESCRIPTION	DATE	BY
1	BID SET	5/22/20	RKS
2			
3			
4			
5			
6			
7			

REVISIONS (OR CHANGE NOTICES)

Designed By: AECOM Imagine it. Delivered. 6501 America's Pkwy NE, Suite 900 Albuquerque, New Mexico 87110 (505)-855-7500

Designed For: CITY OF RIO RANCHO

WASTEWATER TREATMENT PLANT 2 SOLIDS HANDLING IMPROVEMENTS

GENERAL NOTES

RIPAN K. SAHA NEW MEXICO 24280 5-22-2020 PROFESSIONAL ENGINEER

PROJECT NO.	WW2030
DESIGNED BY:	RKS, REH
DRAWN BY:	CAM
CHECKED BY:	RKS, REH
DATE MODIFIED:	5-22-2020
DPW CHK:	

SHEET: G-04

DWG: U:\2020\0126 Rio Rancho - Solids Dewatering Design\WW-CAD-GIS\WW-CAD\26-SHEETS\G-04.dwg USER: jesse.higgins
DATE: May 22, 2020 - 12:05pm XREFS: Rec-ACAD4-PM.dgn IMAGES: Image1_Lettered_Logo_300dpi.jpg

DEMOLITION AND REMOVAL NOTES:

1. ALL DEMOLITION AND REMOVAL WORK SHALL BE IN ACCORDANCE WITH THE DRAWINGS AND SPECIFICATIONS. COORDINATE WITH EXISTING UTILITIES AND MAINTAIN ACCESS AND OPERATIONS.
2. ALL ITEMS WITHIN THE AREA SLATED FOR DEMOLITION OR REMOVAL ARE NOT WARRANTED TO BE SHOWN. NOT ALL EXISTING PIPING AND EQUIPMENT SHOWN FOR CLARITY. CONTRACTOR SHALL FIELD VERIFY ALL EXISTING PIPING AND CONDUITS PRIOR TO NEW FABRICATION.
3. DEMO APPURTENANT ELECTRICAL CONDUITS, BOXES, AND PANELS AS PART OF EQUIPMENT DEMO UNLESS OTHERWISE INDICATED ON THE DRAWINGS.
4. CAPPING OR INSTALLING BLIND FLANGE ON EXISTING PIPING AS APPROPRIATE AT LIMIT OF DEMO.

HEALTH AND SAFETY NOTES:

1. THE CONTRACTOR IS RESPONSIBLE FOR ALL HEALTH AND SAFETY PROCEDURES AND FACILITIES PERTAINING TO THE WORK. WORK SHALL BE IN ACCORDANCE WITH THE CONTRACTORS HEALTH AND SAFETY PLAN(S), THE SPECIFICATIONS, AND ALL GOVERNING REGULATIONS. THE INCLUDES, BUT IS NOT LIMITED TO, PROTECTIVE DEVICES, MONITORING OF AIR, WATER, AND SOILS, TRENCH EXCAVATION AND PROTECTION, TRAFFIC CONTROL, SECURITY, ETC.
2. ALL HEALTH AND SAFETY MEASURES SHALL BE INSTALLED AND FUNCTIONAL AT THE SITE PRIOR TO PERFORMING ANY WORK. THE CONTRACTOR SHALL MAINTAIN HEALTH AND SAFETY MEASURES UNTIL FINAL COMPLETION.
3. SAFETY CONSIDERATION IS TO BE MADE TO WORK AROUND OR ON EXISTING FACILITIES.
4. THE CONTRACTOR IS RESPONSIBLE FOR OBSERVING AND MEETING ALL OSHA REQUIREMENTS.

RRioRancho City of Vision

No.	DESCRIPTION	DATE	BY
7			
6			
5			
4			
3			
2			
1	BID SET	5/22/20	RKS

REVISIONS (OR CHANGE NOTICES)

Designed By: AECOM Imagine it. Delivered.
One Park Square
6501 Americas Pkwy NE, Suite 900
Albuquerque, New Mexico 87110
(505)-855-7500

Designed For:
CITY OF RIO RANCHO

WASTEWATER TREATMENT PLANT 2 SOLIDS HANDLING IMPROVEMENTS

GENERAL NOTES

RIPAN K. SAHA
NEW MEXICO
24280
PROFESSIONAL ENGINEER
5-22-2020

PROJECT NO.	WW2030
DESIGNED BY:	RKS, REH
DRAWN BY:	CAM
CHECKED BY:	RKS, REH
DATE MODIFIED:	5-22-2020
DPW CHK:	

SHEET: G-05

DWG: L:\WW2030\05 Rio Rancho - Solids Dewatering Design\WW-CAD-DGN\WW-CAD\WW-SHEETS\G-05.dwg USER: jesse.higgins
DATE: May 22, 2020 12:29pm XREFS: attr ACDM Pen.stb IMAGES: Image1_3_extract_Black_300dpi.jpg

SITE PLAN
Scale NTS

N

No.	DESCRIPTION	DATE	BY
1	BID SET	5/22/20	RKS
2			
3			
4			
5			
6			
7			

REVISIONS (OR CHANGE NOTICES)

Designed By: AECOM Imagine it. Delivered.
One Park Square
6501 Americas Pkwy NE, Suite 900
Albuquerque, New Mexico 87110
(505)-855-7500

Designed For: CITY OF RIO RANCHO

WASTEWATER TREATMENT PLANT 2 SOLIDS HANDLING IMPROVEMENTS

OVERALL SITE PLAN AND WORK LOCATION

RIPAN K. SAHA — NEW MEXICO — 24280 — PROFESSIONAL ENGINEER — 5-22-2020

PROJECT NO.	WW2030
DESIGNED BY:	RKS, REH
DRAWN BY:	CAM
CHECKED BY:	RKS, REH
DATE MODIFIED:	5-22-2020
DPW CHK:	

SHEET: G-06

DWG: L:\WW2030\16 Rio Rancho - Solids Dewatering Design\WW2-CAD\WW2-CAD\WW2-SHEETS\G-06.dwg USER: jeanshughes
DATE: May 22, 2020 - 12:42pm XREFS: RIO_CONW_PW_BDR IMAGES: WW2-2.jpg Hoopla_Satellite2.1_2020_5000.jpg

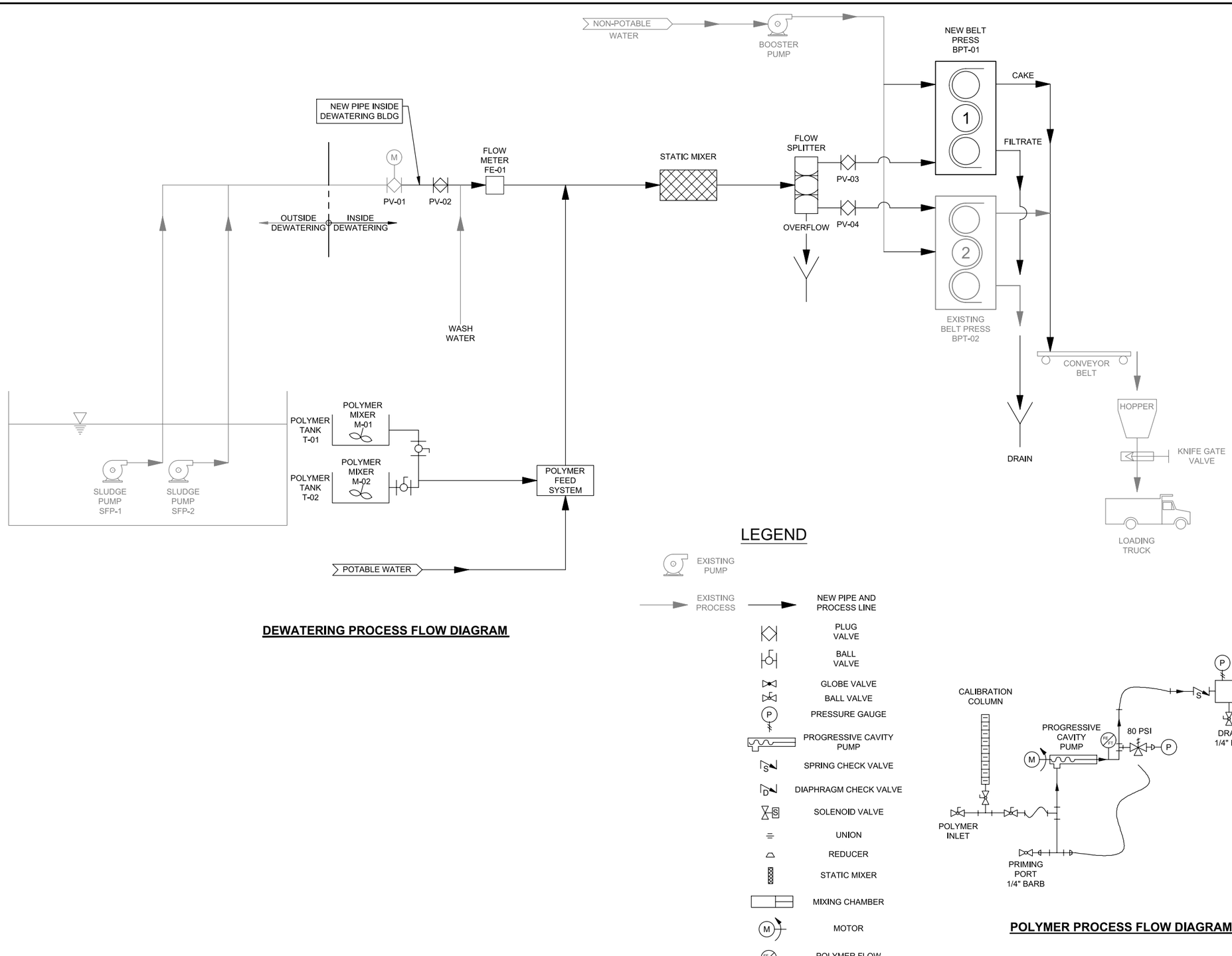

DEWATERING PROCESS FLOW DIAGRAM

LEGEND

- EXISTING PUMP
- EXISTING PROCESS
- NEW PIPE AND PROCESS LINE
- PLUG VALVE
- BALL VALVE
- GLOBE VALVE
- BALL VALVE
- PRESSURE GAUGE
- PROGRESSIVE CAVITY PUMP
- SPRING CHECK VALVE
- DIAPHRAGM CHECK VALVE
- SOLENOID VALVE
- UNION
- REDUCER
- STATIC MIXER
- MIXING CHAMBER
- MOTOR
- POLYMER FLOW MEASUREMENT
- CALIBRATION COLUMN
- PRESSURE RELIEF VALVE

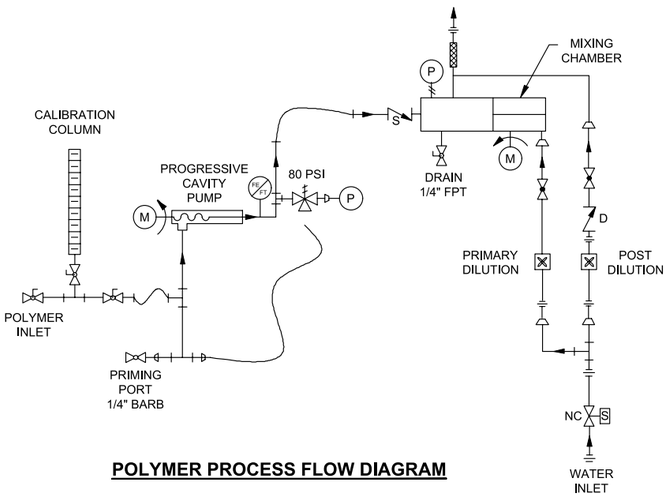

POLYMER PROCESS FLOW DIAGRAM

No.	DESCRIPTION	DATE	BY
1	BID SET	5/22/20	RKS

REVISIONS (OR CHANGE NOTICES)

Designed By: AECOM Imagine it. Delivered. One Park Square, 6501 Americas Pkwy NE, Suite 900, Albuquerque, New Mexico 87110, (505)-855-7500

Designed For: CITY OF RIO RANCHO

WASTEWATER TREATMENT PLANT 2 SOLIDS HANDLING IMPROVEMENTS

PROCESS FLOW DIAGRAM

RIPAN K. SAHA, NEW MEXICO, 24280, PROFESSIONAL ENGINEER, 5-22-2020

PROJECT NO.	WW2030
DESIGNED BY:	RKS, REH
DRAWN BY:	CAM
CHECKED BY:	RKS, REH
DATE MODIFIED:	5-22-2020
DPW CHK:	

SHEET: G-07

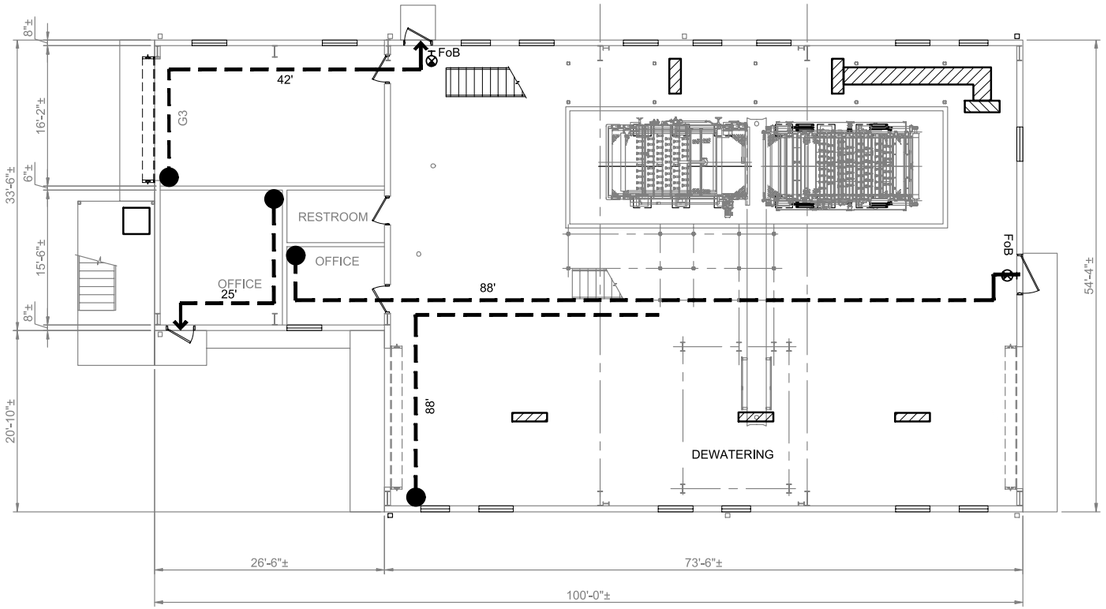

FIRST FLOOR LIFE SAFETY
Scale: NTS

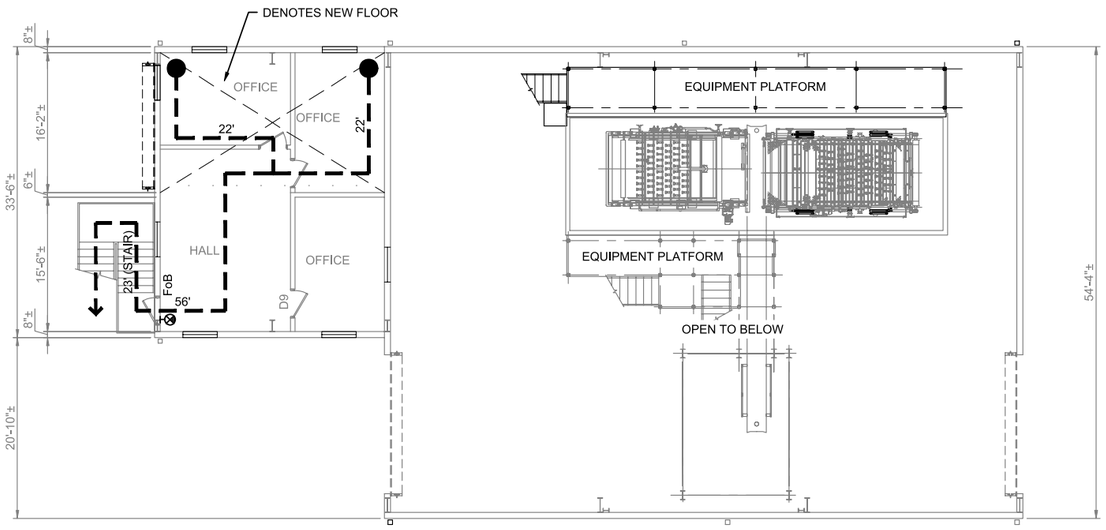

SECOND FLOOR LIFE SAFETY
Scale: NTS

LEGEND:

WALL MOUNTED EXIT LIGHT

FoB FIRE EXTINQUISHER ON BRACKET (OWNER WILL PROVIDE)

BUILDING CODE ANALYSIS

1.1 GENERAL - DEWATERING BUILDING

1.2 OWNER: CITY OF RIO RANCHO, SANDOVAL COUNTY, NEW MEXICO

1.3 SITE ADDRESS: 100 INDUSTRIAL PARK LOOP NE

1.4 CODE IN EFFECT:
INTERNATIONAL BUILDING CODE, 2015 EDITION
-VERSION OF ASCE USED AS REFERENCE: 2010 EDITION
-WIND SPEED: 115 ULTIMATE/93 NOMINAL
-SEISMIC DESIGN CATEGORY: D, PER USGS WEBSITE
-RAIN LOAD: 2 INCHES PER HOUR
-GROUND SNOW LOAD: 20 LB OR PROVIDE CASE STUDY
-MINIMUM FLAT ROOF SNOW LOAD: 20 LB OR PROVIDE CASE STUDY
INTERNATIONAL ENERGY CONSERVATION CODE, 2009 EDITION
NATIONAL ELECTRIC CODE, 2017 EDITION
UNIFORM PLUMBING CODE, 2015 EDITION
UNIFORM MECHANICAL CODE, 2015 EDITION

1.5 AUTHORITY HAVING JURISDICTION
CITY OF RIO RANCHO BUILDING INSPECTION DIVISION

2.1 SITE

2.2 PROPERTY DESCRIPTION: EXISTING BUILDING ON EXISTING SITE. SEE SHEET G-06

2.3 DISTANCE TO LOT LINES: EXISTING BUILDING.

3.1 BUILDING DESCRIPTION

3.2 GENERAL
EXISTING PRE-ENGINEERED METAL BUILDING WITH TWO STORY OFFICE AND SHOP AREA AND ONE STORY (HIGH ROOF) EQUIPMENT SPACE. BUILDING SLAB ON GRADE. IMPROVEMENTS INCLUDES EQUIPMENT REPLACEMENT, EXTERIOR WALL REPAIRS, INTERIOR REPAIRS/ALTERATIONS AND EXPANSION OF SECOND FLOOR CONSTRUCTION OVER AN EXISTING FLOOR OPENING. EXISTING BUILDING VOLUME REMAINS THE SAME. BUILDING NOT SPRINKLERED. REMODELING AND NEW FLOOR AREA BUILT TO COMPLY WITH CURRENT CODE. EXISTING CONDITIONS NOT REMODELED TO REMAIN AS IS.

3.3 BUILDING USE & OCCUPANCY CLASSIFICATION (IBC 302.1)
USE: FACTORY (MINOR @ 16% OFFICES ASSOCIATED WITH BUILDING FUNCTION)
USE: F-1

3.4 TYPE OF CONSTRUCTION (CHAPTER 6)
NEW & EXISTING - TYPE IIB NON-COMBUSTIBLE MATERIALS

3.5 BUILDING HEIGHT (IBC TABLE 504.3)

	FEET	STORIES
ALLOWED:	55'	2
OFFICE (EXIST'G)	@24'	2
DEWATER'G (EXIST'G)	@32'	1

3.6 BUILDING AREA (IBC 506)
AREA INCREASE NOT APPLICABLE. ALLOWED (NS) 15,500 SF

DEWATERING (EXIST'G)	3,960 SF
OFFICE/SHOPS (EXIST'G)	892 SF
TOTAL AREA PROVIDED (EXIST'G)	4,852 SF (FIRST FLOOR)
OFFICE (2ND FLOOR)	892 SF
AREA PROVIDED TOTAL BLDG	5,744 SF

(NOTE: SECOND STORY OF OFFICE/SHOP AREA WILL INCREASE FROM 446 SF TO 892 SF.)

3.7 FIRE RESISTANCE RATINGS (IBC TABLE 601)

ELEMENT	MATERIAL	RATING
STRUCTURAL FRAME	NON-COMBUSTIBLE	0 - HR
BEARING WALLS		
EXTERIOR	NON-COMBUSTIBLE	0 - HR
INTERIOR	NON-COMBUSTIBLE	0 - HR
NON-BEARING WALLS/PARTITIONS		
EXTERIOR	NON-COMBUSTIBLE	0 - HR
INTERIOR	NON-COMBUSTIBLE	0 - HR
FLOOR CONSTRUCTION	NON-COMBUSTIBLE	0 - HR
ROOF CONSTRUCTION	NON-COMBUSTIBLE	0 - HR

3.8 EXTERIOR WALL FIRE RATINGS (IBC TABLE 601 & 602)
FIRE SEPARATION DISTANCE: >30 FT (ACTUAL, EXISTING)
TYPE OF CONSTRUCTION: IIB

3.9 OPENING PROTECTION (IBC TABLE 705.8)
25 FT TO LESS THAN 30 FT (UP, NS) =70% MAX ALLOWABLE AREA OF UNPROTECTED OPENINGS

4.1 BUILDING ENVELOPE CLIMATE ZONE 4B
IECC REQUIRED

4.2 OPAQUE THERMAL
ROOFS - METAL BLDGS - EXISTING TO REMAIN

WALLS - METAL BLDG - R-13

SLAB ON GRADE FLOORS - EXISTING TO REMAIN

4.3 GLAZING
VERTICAL FENESTRATION (0% - 40% OF WALL)
-GLAZING U-0.40
WINDOW FRAMES ALL THERMALLY BROKEN
-FIXED U-0.50
-OPERABLE U-0.50
-ENTRANCE DOORS U-0.85

SHGC-0.40

5.1 LIFE SAFETY - EGRESS

5.2 OCCUPANT LOAD ((IBC TABLE 1004.5)
AREA NAME: DEWATERING & SHOPS
AREA GROSS: 4644 SF
OCCUPANT LOAD FACTOR: 300
OCCUPANTS: 16 (15.48)

AREA NAME: OFFICES
AREA GROSS: @1100 SF
OCCUPANT LOAD FACTOR: 100
OCCUPANTS: 11

OWNER REPORTS THAT TOTAL BUILDING OCCUPANTS NORMALLY 4 PEOPLE (1 SECOND FLOOR OFFICE AREA AND 3 IN REMAINDER OF BUILDING).

BUILDING CONTAINS SINGLE TOILET. PER IBC CHAP 29, OCCUPANTS LIMITED TO 15.

5.3 EXIT ACCESS TRAVEL DISTANCE (IBC TABLE 1017.2)
ALLOWED: FACTORY AREAS 300 FT (GOAL 200 FT IN OFFICE AREAS)
USE: SEE LIFE SAFETY PLAN

5.4 MAXIMUM COMMON PATH OF TRAVEL (IBC TABLE 1006.2.1)
OCCUPANCY: F-2
MAX. ALLOWED: 75 FT (NS)

5.5 STORIES WITH ONE EXIT OR ACCESS TO ONE EXIT FOR OTHER OCCUPANCIES (IBC TABLE 1006.3.3(2))

	OCCUPANT LOAD PER STORY	NUMBER OF EXITS
REQUIRED:	OL<49	1
PROVIDED IN DEWATER'G & SHOPS	OL<49	2
PROVIDED IN OFFICES	OL<49	1

(NOTE: SEE LIFE SAFETY PLANS)

5.6 EGRESS WIDTHS (IBC 1005.3)

	REQUIRED	PROVIDED
OTHER EGRESS COMPONENTS	0.2"/OCCUPANT	DOORS 36" WIDE, 33" CLEAR
STAIR WIDTH (IBC 1009.1 7 & 1011.2) 0.3"/OCCUPANT (<50 PERSONS 36" WIDE)		EXISTING STAIR 42 IN. WIDE
CORRIDOR WIDTH	NA	

5.7 EXTERIOR EXIT STAIRS
IBC 1019 - EXIT ACCESS STAIRS SERVING SINGLE STORIES NOT REQUIRED TO BE ENCLOSED.

IBC 1011.7.2 - OUTDOOR STAIRS TO BE DESIGNED SO AS NOT TO ACCUMULATE WATER

IBC 1011.7.4 - SPACE UNDER EXTERIOR SPACE SHALL NOT BE USED FOR ANY PURPOSE.

IBC 1027 - PROVIDES CRITERIA FOR USE.

6.1 FIRE RESISTANT CONSTRUCTION

6.2 FIRE WALLS (IBC 706)	NOT REQUIRED
6.3 FIRE BARRIERS (IBC 707)	NOT REQUIRED
6.4 SHAFT ENCLOSURES (IBC 713)	NOT REQUIRED
6.5 FIRE PARTITIONS (IBC 708)	NOT REQUIRED
6.6 SMOKE BARRIERS (IBC 709)	NOT REQUIRED
6.7 HORIZONTAL ASSEMBLIES (IBC 711)	NOT REQUIRED
6.8 PENETRATIONS (IBC 714)	NOT REQUIRED

7.1 FIRE PROTECTION SYSTEMS

7.2 AUTOMATIC SPRINKLER SYSTEM (IBC 903) - NOT REQUIRED

7.3 STANDPIPE SYSTEMS (IBC 905) - NOT REQUIRED

7.4 PORTABLE FIRE EXTINGUISHERS (IBC 908) - PROVIDED BY OWNER. SEE LIFE SAFETY PLAN FOR TYPE AND LOCATION

7.5 FIRE ALARM DETECTION SYSTEMS (IBC 907) - NOT REQUIRED

8.0 ACCESSABILITY
BUILDING HAS RESTRICTED ACCESS TO PUBLIC FOR SAFETY. BUILDING OCCUPANTS WORK DESCRIPTIONS HAVE PHYSICAL REQUIREMENTS.

9.0 ENERGY EFFICIENCY
SEE INTERNATIONAL ENERGY CONSERVATION CODE CALCULATIONS

10.0 STRUCTURAL DESIGN
SEE STRUCTURAL CODE SHEET AND GENERAL NOTES

11.0 ELECTRICAL DESIGN
SEE ELECTRICAL CODE SHEET AND GENERAL NOTES

12.0 MECHANICAL DESIGN
SEE MECHANICAL CODE SHEET AND GENERAL NOTES

13.0 CHEMICAL MATERIALS (IBC TABLE 307)
LIQUID POLYMER-NFRA RATINGS:
HEALTH: 1; FIRE:0; REACTIVITY:0

City of Rio Rancho — City of Vision

No.	DESCRIPTION	DATE	BY
1	BID SET	5/22/20	RKS
2			
3			
4			
5			
6			
7			

REVISIONS (OR CHANGE NOTICES)

Designed By: AECOM Imagine it. Delivered. One Park Square, 6501 Americas Pkwy NE, Suite 900, Albuquerque, New Mexico 87110, (505)-855-7500

Designed For: CITY OF RIO RANCHO

WASTEWATER TREATMENT PLANT 2 SOLIDS HANDLING IMPROVEMENTS

CODE ANALYSIS AND LIFE SAFETY

ROBERT E. HAWTHORNE, NEW MEXICO, NO. 8178, 5-22-2020, REGISTERED PROFESSIONAL ENGINEER

PROJECT NO.	WW2030
DESIGNED BY:	RKS, REH
DRAWN BY:	CAM
CHECKED BY:	RKS, REH
DATE MODIFIED:	5-22-2020
DPW CHK:	

SHEET: G-08

DWG: L:\WW2030\Rio Rancho - Solids Dewatering Design\WW-CAD-PW\WW-CAD\01-SHEETS\G-08.dwg USER: James.Higgins
DATE: May 22, 2020 - 12:07pm XREFS: Block_1.dwg; Block_2.dwg; Block_3.dwg; Block_4.dwg; Block_5.dwg; Block_6.dwg; Block_7.dwg; Block_8.dwg; Block_9.dwg; Block_10.dwg; Block_11.dwg; Block_12.dwg; Block_13.dwg; Block_14.dwg; Block_15.dwg; Block_16.dwg; Block_17.dwg; Block_18.dwg; Block_19.dwg; Block_20.dwg; Block_21.dwg; Block_22.dwg; Block_23.dwg; Block_24.dwg; Block_25.dwg; Block_26.dwg; Block_27.dwg; Block_28.dwg; Block_29.dwg; Block_30.dwg; Block_31.dwg; Block_32.dwg; Block_33.dwg; Block_34.dwg; Block_35.dwg; Block_36.dwg; Block_37.dwg; Block_38.dwg; Block_39.dwg; Block_40.dwg;

GENERAL NOTES:

1. SURVEY POINTS ARE BASED ON NEW MEXICO STATE PLANE COORDINATES (NAD 83-CENTRAL ZONE) AND TOPO ELEVATIONS ARE NAVD 88. SURVEY AND SUE ARE PROVIDED BY COBB FENDLEY AND ASSOCIATES, INC. IN OCTOBER, 2019
2. PLANT UTILITIES ARE BASED ON AVAILABLE RECORD DRAWINGS PROVIDED BY THE PLANT AND TO BE CONSIDERED APPROXIMATE. CONTRACTOR IS RESPONSIBLE TO VERIFY ITS LOCATION, DEPTH, SIZE AND MATERIAL AS NEEDED FOR THIS PROJECT

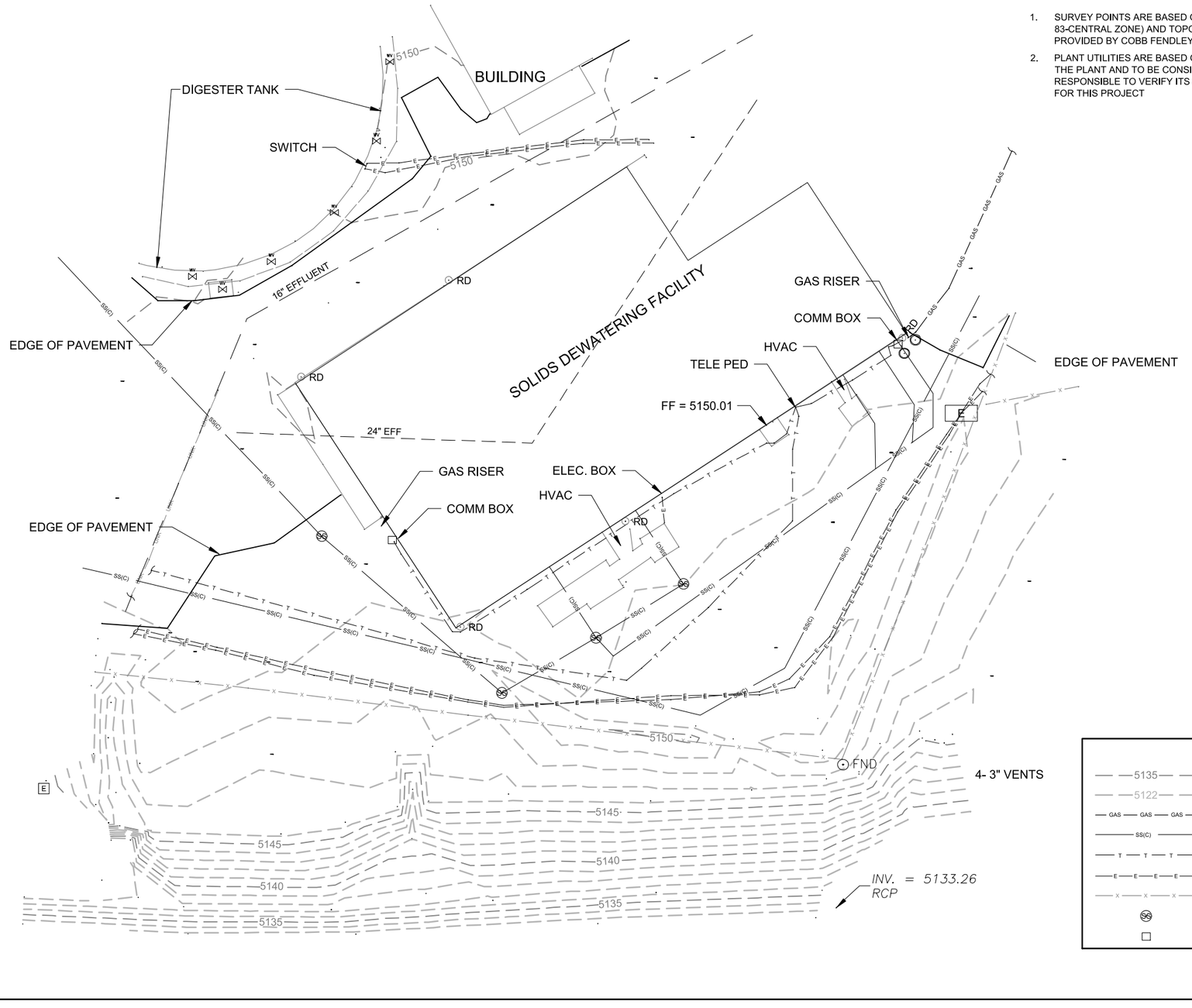

LEGEND:

5135	CONTOUR LINE MAJOR
5122	CONTOUR LINE MINOR
GAS GAS GAS	GAS LINE
SS(C)	EFFLUENT LINE
T T T	TELEPHONE / COMM LINE (UNDERGROUND)
E E E E	ELECTRICAL LINE (UNDERGROUND)
X X X	FENCE
SS	MANHOLE - EFFLUENT
	COMM. BOX

N

0 10' 20'

No.	DESCRIPTION	DATE	BY
1	BID SET	5/22/20	RKS
2			
3			
4			
5			
6			
7			

REVISIONS (OR CHANGE NOTICES)

Designed By: AECOM Imagine it. Delivered.
One Park Square
6501 Americas Pkwy NE, Suite 900
Albuquerque, New Mexico 87110
(505)-855-7500

Designed For:
CITY OF RIO RANCHO

WASTEWATER TREATMENT PLANT 2 SOLIDS HANDLING IMPROVEMENTS

SITE YARD PIPING PLAN

RIPAN K. SAHA
NEW MEXICO
24260
5-22-2020
PROFESSIONAL ENGINEER

PROJECT NO.	WW2030
DESIGNED BY:	RKS, REH
DRAWN BY:	CAM
CHECKED BY:	RKS, REH
DATE MODIFIED:	5-22-2020
DPW CHK:	

SHEET: C-01

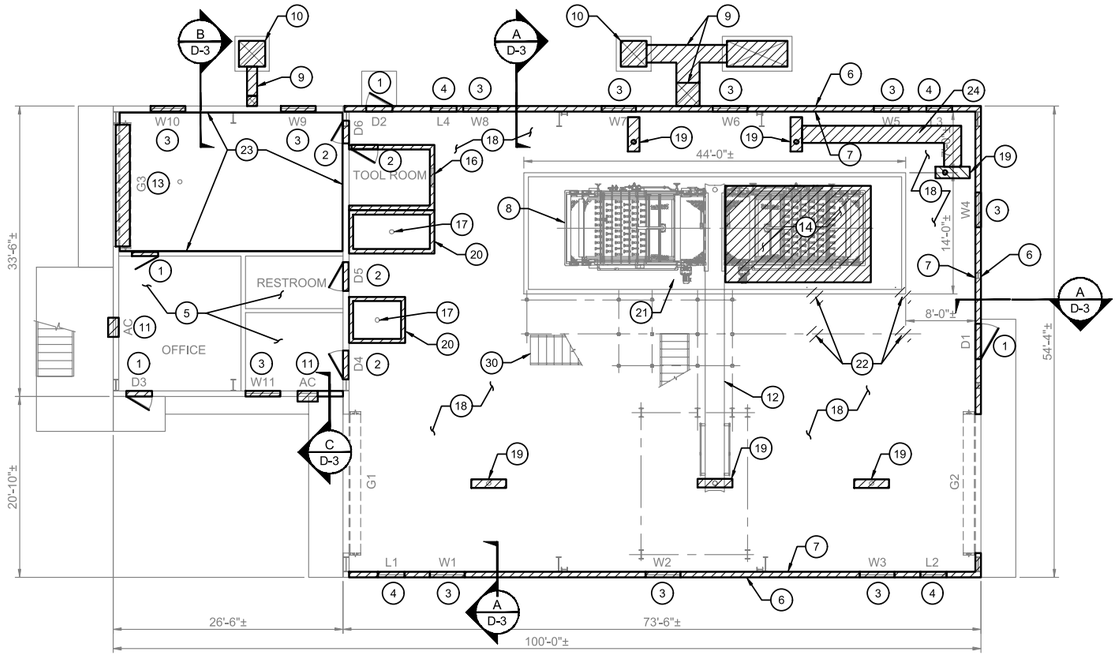

FIRST FLOOR PLAN
Scale 1/8"=1'-0"

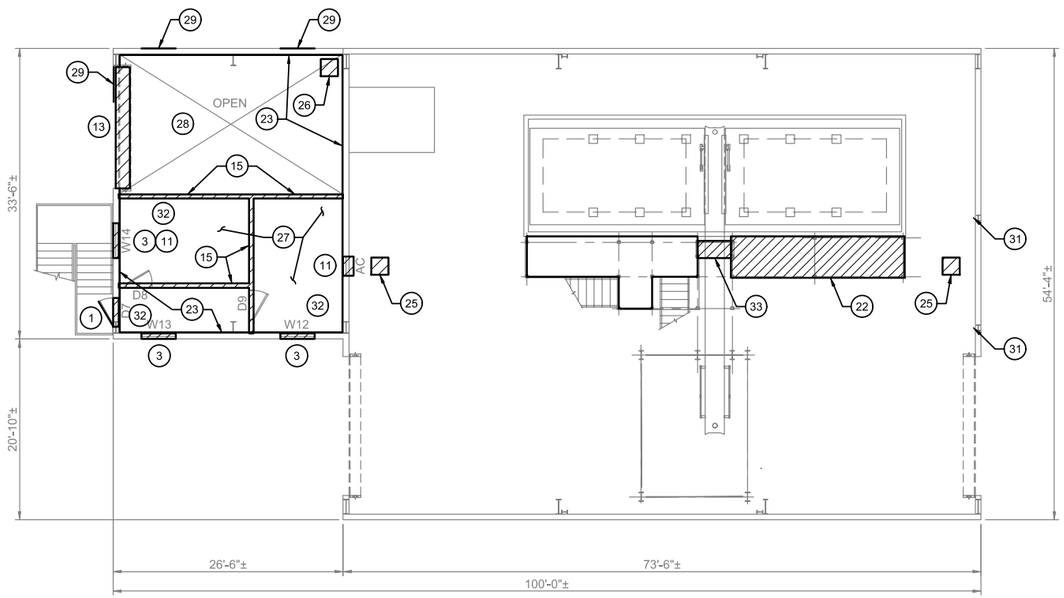

SECOND FLOOR PLAN
Scale 1/8"=1'-0"

GENERAL NOTES:

1. DIMENSIONS SHOWN MAY VARY FROM ACTUAL CONDITIONS. CONTRACTOR SHALL FIELD VERIFY ALL DIMENSIONS AND ELEVATIONS.
2. CONTRACTOR SHALL COORDINATE WITH THE PLANT OPERATORS FOR ALL NON-STATIONARY ITEMS TO BE REMOVED FROM THE OFFICE AREAS, TOOL ROOM, AND WORKSHOP AT LEAST TWO(2) WEEKS PRIOR TO THE CONSTRUCTION START

KEYED NOTES

1. REMOVE AND DISPOSE OF EXISTING METAL DOOR, DOOR FRAME AND THRESHOLD.
2. REMOVE AND DISPOSE OF EXISTING WOOD DOOR, DOOR FRAME AND THRESHOLD.
3. REMOVE AND DISPOSE OF EXISTING WINDOW AND FRAME.
4. REMOVE AND DISPOSE OF EXISTING LOUVER.
5. REMOVE AND DISPOSE OF EXISTING SHEET VINYL FLOOR COVERING.
6. REMOVE AND REUSE OF EXISTING EXTERIOR METAL WALL PANELS TO 7'-4" ABOVE FINISHED FLOOR OF DEWATERING FACILITY, SEE A/D-3.
7. REMOVE AND DISPOSE OF EXISTING INTERIOR WALL PANELS, SEE A/D-3.
8. EXISTING BELT FILTER PRESS TO REMAIN.
9. REMOVE AND DISPOSE OF EXISTING HVAC DUCTS.
10. REMOVE AND DISPOSE OF EXISTING AIR COOLER UNIT.
11. REMOVE AND DISPOSE OF EXISTING AC UNIT - WINDOW TYPE.
12. EXISTING CONVEYOR BELT SYSTEM TO REMAIN.
13. REMOVE AND DISPOSE OF EXISTING METAL ROLL-UP DOOR.
14. REMOVE AND DISPOSE EXISTING BELT FILTER PRESS. DEMO (6) EXISTING CONCRETE PEDESTALS SUPPORTING EXISTING BELT PRESS. CUT DOWELS FLUSH W/ TOP OF SLAB. PAINT EXPOSED REBAR WITH EPOXY PAINT, (2) COATS MIN.
15. REMOVE EXISTING STUD WALLS.
16. REMOVE AND DISPOSE OF EXISTING TOOL ROOM.
17. EXISTING DRAINS TO REMAIN.
18. REMOVE EXISTING FLOOR COATING AND PREPARE CONCRETE SURFACE TO RECEIVE NEW COATING/GROUT.
19. SAWCUT AND REMOVE CONCRETE FOR NEW 4'-0" TRENCH DRAIN. REMOVE FLOOR DRAIN IF PRESENT.
20. REMOVE AND DISPOSE OF CONCRETE CURB.
21. EXISTING FLOOR COATING TO REMAIN UNDER EXISTING PRESS INSIDE CURB AREA.
22. REMOVE AND DISPOSE OF EXISTING PORTION OF PLATFORM AND SUPPORT SYSTEM.
23. REMOVE AND DISPOSE DRY WALL, CLEAN OUT ALL DIRT, DEBRIS, RODENT NESTS, ETC. FROM WALL
24. SAWCUT AND REMOVE CONCRETE FOR NEW DRAIN LINE.
25. REMOVE AND DISPOSE EXISTING HEATER. VENT TO REMAIN FOR NEW HEATER.
26. REMOVE AND DISPOSE EXISTING HEATER. CAP AND SEAL EXISTING VENT.
27. REMOVE AND DISPOSE EXISTING CARPET FLOORING.
28. REMOVE AND DISPOSE DRY WALL CEILING. SEE B/D-3 FOR SIMILAR.
29. REMOVE EXTERIOR METAL PANEL FOR NEW WINDOW.
30. REMOVE STAIRS, IF NEEDED TO REMOVE THE EXISTING BELT PRESS. RE-INSTALL THE STAIRS AFTER NEW PRESS IS INSTALLED.
31. WIND COLUMNS - FIELD VERIFY THE LOCATIONS. IF PRESENT, NOTIFY ENGINEER.
32. REMOVE DRY WALL CEILING, HAT CHANNELS, AND INSULATION.
33. REMOVE AND DISPOSE PLATFORM OVER CONVEYOR BELT.

No.	DESCRIPTION	DATE	BY
1	BID SET	5/22/20	RKS
2			
3			
4			
5			
6			
7			

REVISIONS (OR CHANGE NOTICES)

Designed By: AECOM Imagine it. Delivered. One Park Square, 6501 Americas Pkwy NE, Suite 900, Albuquerque, New Mexico 87110, (505)-855-7500

Designed For: CITY OF RIO RANCHO

WASTEWATER TREATMENT PLANT 2 SOLIDS HANDLING IMPROVEMENTS

DEWATERING FACILITY DEMOLITION PLANS

ROBERT E. HAWTHORNE, NEW MEXICO, NO. 8178, REGISTERED PROFESSIONAL ENGINEER, 5-22-2020

PROJECT NO.	WW2030
DESIGNED BY:	RKS, REH
DRAWN BY:	CAM
CHECKED BY:	RKS, REH
DATE MODIFIED:	5-22-2020
DPW CHK:	

SHEET: D-1

DWG: L:\WW2030\Rio Rancho - Solids Dewatering Design\WW2-CAD-GIS\WW2-CAD\20-SHEETS\D-1.dwg USER: jhawthorne
DATE: May 22, 2020 1:14pm USER: jhawthorne XREFS: attach: RK_AECOM-PW-SDR IMAGES: image-2_Scanned Mark_Modified.jpg

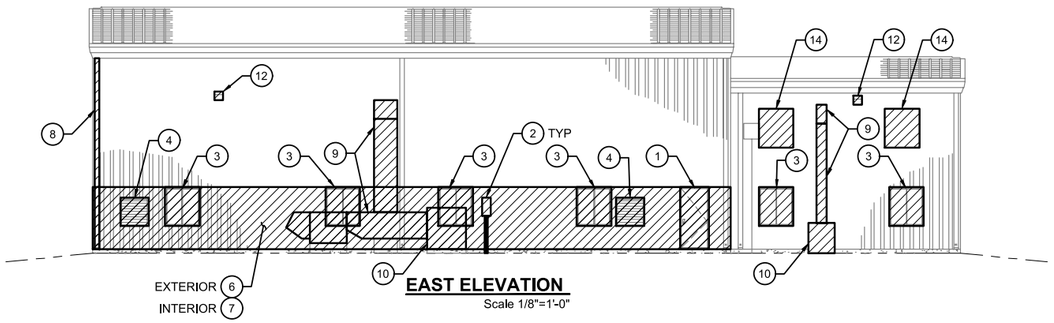

EAST ELEVATION
Scale 1/8"=1'-0"

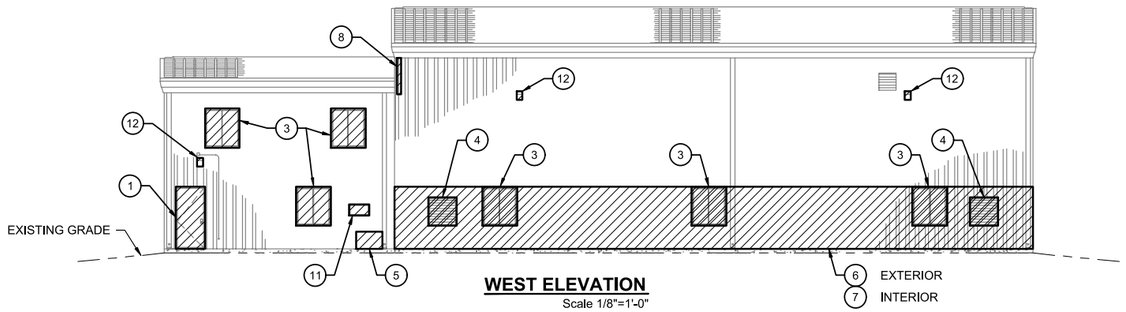

WEST ELEVATION
Scale 1/8"=1'-0"

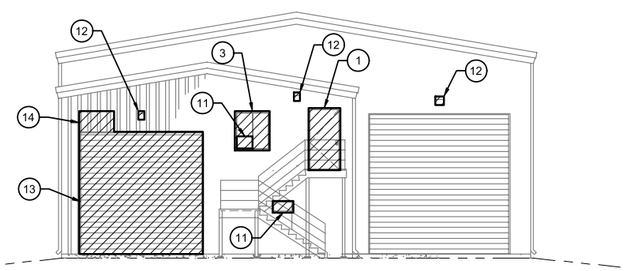

NORTH ELEVATION
Scale 1/8"=1'-0"

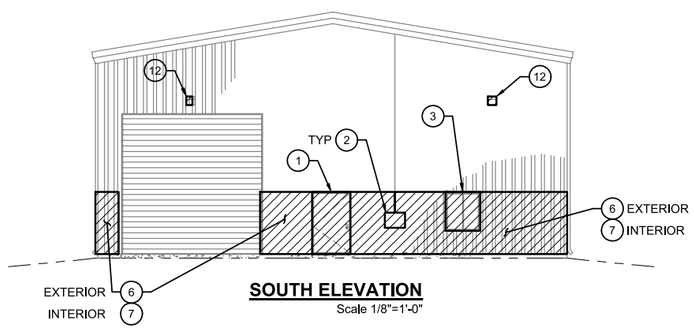

SOUTH ELEVATION
Scale 1/8"=1'-0"

GENERAL NOTES:

1. DIMENSIONS SHOWN MAY VARY FROM ACTUAL CONDITIONS. CONTRACTOR SHALL FIELD VERIFY ALL DIMENSIONS AND ELEVATIONS.

KEYED NOTES ◯

1. REMOVE AND DISPOSE OF EXISTING METAL DOOR, DOOR FRAME AND THRESHOLD.
2. DETACH FROM METAL WALL PANEL AND ATTACH TO NEW CMU WALL.
3. REMOVE AND DISPOSE OF EXISTING WINDOW AND FRAME.
4. REMOVE AND DISPOSE OF EXISTING LOUVER.
5. REMOVE AND DISPOSE DAMAGED PANEL, SEE C/D-3.
6. REMOVE AND REUSE EXISTING EXTERIOR METAL WALL PANELS TO 7'-4" ABOVE FINISHED FLOOR OF DEWATERING FACILITY, SEE A/D-3.
7. REMOVE AND DISPOSE OF EXISTING INTERIOR WALL PANELS, SEE A/D-3.
8. REMOVE AND DISPOSE OF EXISTING DOWNSPOUT.
9. REMOVE AND DISPOSE OF EXISTING HVAC DUCTS.
10. REMOVE AND DISPOSE OF EXISTING AIR COOLER UNIT.
11. REMOVE AND DISPOSE OF EXISTING AC UNIT - WINDOW TYPE.
12. REMOVE AND DISPOSE OF EXISTING EXTERIOR LIGHT FIXTURE.
13. REMOVE AND DISPOSE OF EXISTING METAL ROLL-UP DOOR.
14. REMOVE PANEL AND WALL FOR NEW WINDOW. NEW WINDOW SHALL BE BETWEEN TWO EXISTING HORIZONTAL Z-GIRTS. FIELD VERIFY ELEVATION.

RioRancho City of Vision

No.	DESCRIPTION	DATE	BY
1	BID SET	5/22/20	RKS
2			
3			
4			
5			
6			
7			

REVISIONS (OR CHANGE NOTICES)

Designed By: AECOM Imagine it. Delivered.
One Park Square
6501 Americas Pkwy NE, Suite 900
Albuquerque, New Mexico 87110
(505)-855-7500

Designed For: CITY OF RIO RANCHO

WASTEWATER TREATMENT PLANT 2 SOLIDS HANDLING IMPROVEMENTS

DEWATERING FACILITY DEMOLITION ELEVATIONS

ROBERT E. HAWTHORNE NEW MEXICO 8178 5-22-2020 REGISTERED PROFESSIONAL ENGINEER

PROJECT NO.	WW2030
DESIGNED BY:	RKS, REH
DRAWN BY:	CAM
CHECKED BY:	RKS, REH
DATE MODIFIED:	5-22-2020
DPW CHK:	

SHEET: D-2

DWG: L:\60610126 Rio Rancho - Solids Dewatering Design\WW-CAD-GIS\WW-CAD\D-SHEETS\D-2.dwg USER: jessica.higgins
DATE: May 22, 2020 12:27pm XREFS: Basic: T:\AECOM-PW-BIM Models\Project_Delivered_Site_Model.rvt

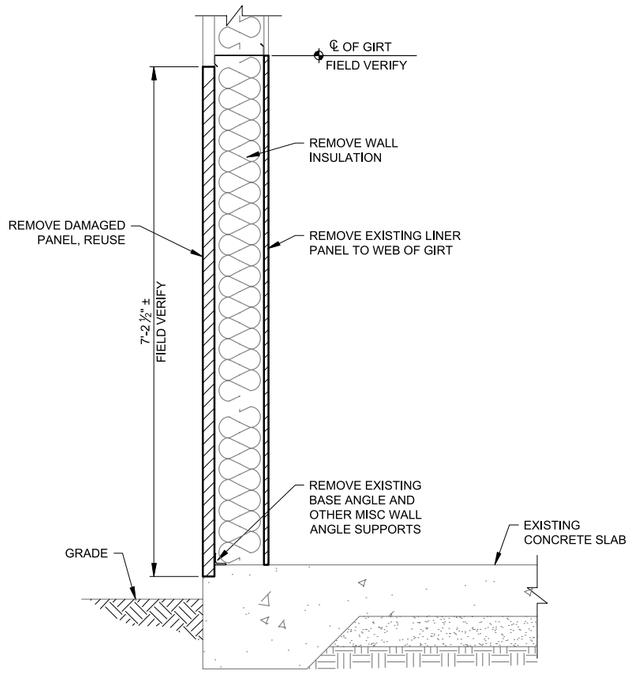

A | **SECTION**
D-1 | Scale 1"=1'-0"

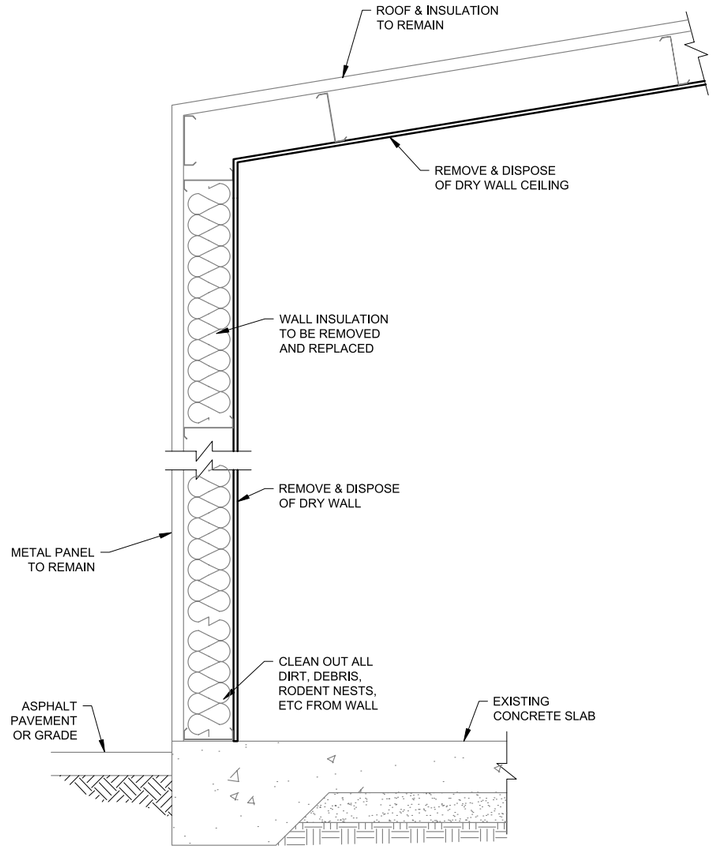

B | **SECTION**
D-1 | Scale 1"=1'-0"

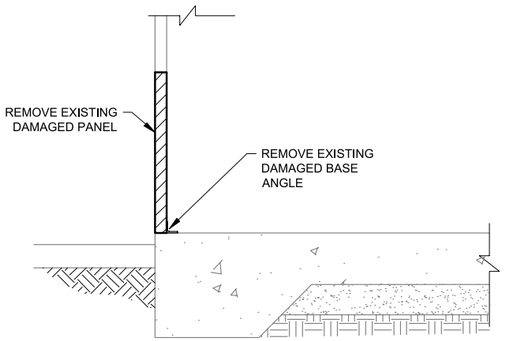

C | **SECTION**
D-1 | Scale 1"=1'-0"

REVISIONS (OR CHANGE NOTICES)

No.	DESCRIPTION	DATE	BY
1	BID SET	5/22/20	RKS
2			
3			
4			
5			
6			
7			

Designed By: AECOM Imagine it. Delivered.
One Park Square
6501 Americas Pkwy NE, Suite 900
Albuquerque, New Mexico 87110
(505)-855-7500

Designed For: CITY OF RIO RANCHO

WASTEWATER TREATMENT PLANT 2 SOLIDS HANDLING IMPROVEMENTS

DEWATERING FACILITY DEMOLITION SECTIONS

ROBERT E. HAWTHORNE NEW MEXICO 8178 REGISTERED PROFESSIONAL ENGINEER 5-22-2020

PROJECT NO.	WW2030
DESIGNED BY:	RKS, REH
DRAWN BY:	CAM
CHECKED BY:	RKS, REH
DATE MODIFIED:	5-22-2020
DPW CHK:	

SHEET: D-3

STRUCTURAL GENERAL NOTES

A. GENERAL

1. THE NOTES ON THIS SHEET AND STRUCTURAL DETAILS ARE TYPICAL AND APPLY TO THE ENTIRE PROJECT WHETHER SPECIFICALLY CALLED OUT OR NOT, EXCEPT WHERE THERE ARE SPECIFIC INDICATIONS TO THE CONTRARY ON STRUCTURAL SHEETS. IF THERE ARE QUESTIONS, THEY SHALL BE SUBMITTED TO THE STRUCTURAL ENGINEER AND ANSWERED IN WRITING PRIOR TO CONSTRUCTION.
2. SAFETY AND STRUCTURE STABILITY DURING CONSTRUCTION ARE THE SOLE RESPONSIBILITY OF THE CONTRACTOR. STRUCTURES HAVE BEEN DESIGNED TO RESIST THE DESIGN LIVE LOADS ONLY AS COMPLETED STRUCTURE. PROVIDE TEMPORARY BRACING AND SHORING, AS REQUIRED, DURING CONSTRUCTION.
3. OPENINGS FOR PIPES, DUCTS, CONDUITS, ETC. ARE NOT ALL SHOWN ON THE STRUCTURAL DRAWINGS. COORDINATE AND PROVIDE OPENINGS, AS REQUIRED, TO ACCOMMODATE ALL WORK SHOWN OR SPECIFIED IN THE CONTRACT DOCUMENTS AND OTHERWISE REQUIRED FOR THE FURNISHING OF A FUNCTIONALLY COMPLETE PROJECT.
4. CONTRACTOR SHALL COORDINATE FINAL SIZE AND LOCATION OF ALL OPENINGS WITH THE ACTUAL EQUIPMENT SUPPLIED, PROJECT REQUIREMENTS, AND FIELD CONDITIONS.
5. THE ENGINEER OF RECORD PERMITS NO OPENINGS OR ALTERNATIONS THROUGH BEAMS OR COLUMNS UNLESS APPROVED IN WRITING.
6. SHOP DRAWINGS SHALL BE FURNISHED FOR REVIEW BEFORE ANY FABRICATION AND ERECTION. POORLY EXECUTED SHOP DRAWINGS SHALL BE REJECTED AND RESUBMITTED. DUPLICATION OF CONTRACT DRAWINGS FOR SHOP DRAWINGS IS NOT ACCEPTABLE AND WILL BE REJECTED.

B. APPLICABLE SPECIFICATIONS AND CODES

1. INTERNATIONAL BUILDING CODE (IBC) 2015 WITH APPLICABLE EDITIONS OF THE CODE REFERENCED STANDARDS.
2. ASCE 7-10 MINIMUM DESIGN LOADS FOR BUILDINGS AND OTHER STRUCTURES
3. AISC STEEL CONSTRUCTION MANUAL, 14TH EDITION
4. ACI 318-14, BUILDING CODE REQUIREMENTS FOR STRUCTURAL CONCRETE, BY THE AMERICAN CONCRETE INSTITUTE.

C. DESIGN CRITERIA

1. OCCUPANCY CATEGORY: II
2. DEAD LOAD:
   STRUCTURE WEIGHT
   COLLATERAL LOAD: 8 PSF
3. LIVE LOAD:
   2ND FLOOR OFFICE: 60 PSF
   ROOF: 20 PSF (NOT REDUCIBLE)
4. WIND:
   ULTIMATE DESIGN WIND SPEED: 115 MPH
   NOMINAL DESIGN WIND SPEED: 93 MPH
   EXPOSURE: C
   ENCLOSURE CLASSIFICATION: PARTIALLY ENCLOSED
   INTERNAL PRESSURE COEFFICIENT = ±0.55
   ALL COMPONENT AND CLADDING MATERIALS NOT DESIGNED BY THE ENGINEER SHALL BE DESIGNED FOR A MINIMUM ULTIMATE PRESSURE OF 85 PSF UNLESS OTHERWISE APPROVED BY THE ENGINEER
5. SEISMIC:
   IMPORTANCE FACTOR: 1.0
   SPECTRAL RESPONSE ACCELERATION, SS = 0.472
   SPECTRAL RESPONSE ACCELERATION, S1 = 0.14
   SITE CLASS: D
   SEISMIC DESIGN CATEGORY: D
   SPECTRAL RESPONSE COEFFICIENT, SDS = 0.447
   SPECTRAL RESPONSE COEFFICIENT, SD1 = 0.209
   ANALYSIS PROCEDURE: EQUIVALENT LATERAL FORCE
6. SNOW LOAD:
   GROUND SNOW LOAD = 10 PSF
   EXPOSURE COEFFICIENT, Ce = 1.0
   THERMAL COEFFICIENT, Ct = 1.0
   IMPORTANCE FACTOR, I = 1.0
   DESIGN SNOW LOAD, Ps = 10 PSF

D. GEOTECHNICAL

1. BACKFILL, GRANULAR FILL, AND STRUCTURAL FILL SHALL BE PLACED IN 8" LOOSE LIFTS AND COMPACTED TO 95% RELATIVE COMPACTION IN ACCORDANCE WITH ASTM D-1557 WITH MOISTURE WITHIN +2% OF OPTIMUM.
2. LOCATE ANY EXISTING UTILITY LINES AND OR APPURTENANCES AND ADVISE ENGINEER OF ANY CONFLICTS WITH NEW STRUCTURES PRIOR TO THEIR CONSTRUCTION. DO NOT DESTROY ANY EXISTING UNDERGROUND STRUCTURES WITHOUT WRITTEN AUTHORIZATION.

E. CONCRETE AND REINFORCING

1. CAST-IN-PLACE CONCRETE
   (A) CLASS A CONCRETE, NORMAL WEIGHT CONCRETE, TYPE I OR II CEMENT
   f'c = 4500 PSI @ 28 DAYS
   EXPOSURE CLASS: F2, AIR-ENTRAINED PER ACI 318, TABLE 19.3.3.1
   MAXIMUM WATER-CEMENT RATIO = 0.45, 20% FLY ASH MAX.
2. ALL REINFORCING STEEL SHALL CONFORM TO ASTM A615, GRADE 60.
3. ALL SPLICES SHALL BE CLASS B, TENSION LAPS UNLESS NOTED ON PLANS.
4. DO NOT WELD OR TACK WELD REINFORCING STEEL.
5. PROVIDE CORNER BARS IN STRIP FOOTINGS, THE SAME SIZE AND NUMBER AS CONTINUOUS REINFORCEMENT.
6. REINFORCING BARS, BAR SUPPORTS, AND SPACERS SHALL BE DETAILED AND PROVIDED IN ACCORDANCE WITH THE LATEST ACI DETAILING MANUAL. USE WIRE-BAR SUPPORTS COMPLYING WITH CRSI SPECIFICATIONS. SUPPORTS SHALL NOT BE PLACED FURTHER THAN 4 FEET APART.
7. UNLESS NOTED OTHERWISE, PROVIDE CONCRETE COVER FOR REINFORCING ACCORDING TO ACI 318.
8. ALL CONCRETE WORK SHALL BE IN ACCORDANCE WITH THE LATEST EDITIONS OF THE AMERICAN CONCRETE INSTITUTE STANDARDS, ACI 318 AND ACI 301.
9. ALL CONCRETE SHALL BE PLACED IN CONFORMANCE WITH ACI 117-10.
10. DO NOT PLACE CONCRETE IN WATER OR ON FROZEN GROUND. DO NOT ALLOW GROUND BENEATH FOOTINGS TO FREEZE.
11. FOUR 6"X12" (OR SIX 4"X8") CONCRETE CYLINDERS SHALL BE MADE FOR EACH 50 CUBIC YARDS, OR FRACTION THEREOF, OF EACH CLASS OF CONCRETE PLACED IN ANY ONE DAY. TEST ONE CYLINDER AT 7 DAYS, TEST TWO 6"X12" (OR THREE 4"X8") CYLINDERS AT 28 DAYS, AND HOLD ON 6"X12" (OR TWO 4"X8") CYLINDER(S) FOR VERIFICATION. THE CONCRETE SLUMP, TEMPERATURE, AND AIR CONTENT SHALL BE MEASURED EVERY TIME A SET OF CYLINDERS IS MADE.
12. FORMED CONSTRUCTION JOINTS SHALL BE KEYED. CONSTRUCTION JOINTS AT UNFORMED SURFACES OR INTERSECTIONS SHALL BE INTENTIONALLY ROUGHENED TO 1/4" MINIMUM AMPLITUDE.
13. REFER TO OTHER DISCIPLINE DRAWINGS PRIOR TO CONSTRUCTION FOR EMBEDDED ITEMS AND PENETRATIONS NOT SHOW ON STRUCTURAL DRAWINGS.
14. NO CONDUITS OR PIPES MAY BE EMBEDDED WITHIN A SLAB WITHOUT WRITTEN APPROVAL FROM ENGINEER. IF APPROVED BY ENGINEER, CONDUITS AND PIPING EMBEDDED IN CONCRETE SHALL BE SPACED TO ALLOW A MINIMUM OF 4" BETWEEN THE CONDUITS OR PIPING AND SHALL BE LOCATED IN THE MIDDLE OF THE SLAB, UNO.
15. ALL DOWELS, ANCHOR RODS, EMBEDDED STEEL, ELECTRICAL CONDUITS, PIPE SLEEVES, PIPING, AND ALL OTHER EMBEDDED ITEMS AND FORMED DETAILS SHALL BE IN PLACE BEFORE START OF CONCRETE PLACEMENT.
16. ALL PIPING PENETRATIONS THROUGH SLAB SHALL BE SLEEVED. NO CORING OF SLAB IS PERMITTED.
17. UNLESS NOTED OTHERWISE, PROVIDE 3/4"X3/4" CHAMFERS AT ALL EXPOSED EDGES AND 1/2" CHAMFERS AT ALL JOINTS. NOT ALL CHAMFERS MAY BE SHOWN ON DRAWINGS.
18. PROVIDE HOT AND COLD WEATHER REQUIREMENTS IN ACCORDANCE WITH ACI 305 AND 306.

F. MASONRY

1. DESIGN STRENGTHS:
   a. F'M= 1,500 PSI
   b. FY = 60,000 PSI (ASTM A615, GRADE 60)
   c. NORMALWEIGHT CMU (ASTM C90)
   d. NET COMPRESSIVE STRENGTH = 1900 PSI
   e. TYPE S MORTAR (ASTM C270, TABLE 1)
2. MASONRY CONSTRUCTION SHALL CONFORM TO ACI 530.
3. GROUT FOR FILLING MASONRY CAVITIES TO BE COARSE GROUT CONFORMING TO ASTM C476 UNO. MAXIMUM COARSE AGGREGATE SIZE IS 3/8 INCH.
4. GROUT POURS SHALL NOT EXCEED 4 FEET IN HEIGHT UNLESS CLEANOUTS ARE PROVIDED IN THE BOTTOM COURSE OF THE CELL(S) TO BE GROUTED AND WRITTEN PERMISSION IS OBTAINED FOR HIGH LIFT GROUTING.
5. ALL HOLLOW MASONRY OR BRICK TO BE REINFORCED SHALL BE MARKED WITH KEEL AT THE BOTTOM OF THE WALL AT THE CELLS WHERE DOWELS OCCUR OR REBAR IS TO BE PLACED AND GROUTED.
6. LAP ALL BARS 48 DIAMETERS OR 24" MINIMUM UNLESS OTHERWISE SHOWN.
7. RESTRICTED BAR ANCHORAGE: IN CASES WHERE REINFORCING BARS CANNOT BE EXTENDED AS FAR AS REQUIRED, THE BARS SHALL EXTEND AS FAR AS POSSIBLE AND END IN ACI STANDARD HOOK. SHOW ON SHOP DRAWINGS AND HIGHLIGHT WITH A BOX TO BRING TO ENGINEER'S ATTENTION.
8. COLD WEATHER AND HOT WEATHER PROCEDURES SHALL BE USED IN ACCORDANCE WITH ACI 530.1/ASCE 6/TMS602 ARTICLE 1.8C AND 1.8D.
9. POST-INSTALLED DRILL AND EPOXY ANCHORS INTO GROUTED OR UNGROUTED CMU SHALL BE HILTI HIT-HY 270 ADHESIVE ANCHORING SYSTEM, OR APPROVED EQUAL, WITH MINIMUM 1/2" DIAMETER, A36 ANCHOR WITH MINIMUM OF 4" EMBEDMENT UNLESS OTHERWISE SHOWN.

F. STEEL

1. MATERIALS SHALL CONFORM TO THE STANDARDS LISTED:

-PLATES, CHANNELS, AND S SHAPES	ASTM A36
-WIDE FLANGES	ASTM A992, GRADE 50
-HSS SECTIONS	ASTM A500, GRADE B
-ANCHOR BOLTS	ASTM F1554, GRADE 36
-STRUCTURAL BOLTS	ASTM A325
-NON-STRUCTURAL BOLTS	ASTM A307

2. BOLTED CONNECTIONS UNLESS NOTED OTHERWISE:
   -STRUCTURAL: 3/4" DIAMETER MIN., FULL DEPTH CONNECTION
   -ANCHOR BOLTS: 1" DIAMETER MIN., (4) BOLTS MINIMUM, MINIMUM 12" EMBEDMENT, PROJECTION ABOVE CONCRETE AS REQUIRED.
   -NON-STRUCTURAL: 5/8" DIAMETER, MIN.
3. ALL WELDING SHALL BE PROVIDED BY CERTIFIED WELDERS AND SHALL BE IN ACCORDANCE WITH THE LATEST STANDARDS OF THE AWS AND AISC. INSPECT ALL WELDING IN ACCORDANCE WITH THE IBC.
4. WHEN FILLET WELD SIZE IS NOT INDICATED, PROVIDE MAXIMUM WELD SIZE BASED ON CONNECTED MATERIAL THICKNESSES IN ACCORDANCE WITH AISC SPECIFICATIONS.
5. DO NOT PAINT STEEL TO BE ENCASED IN CONCRETE, CONTACT SURFACES OF FRICTION TYPE CONNECTIONS, AREAS WITHIN 2 INCHES OF FIELD WELDS.
6. DO NOT FIELD CUT OR ALTER STRUCTURAL MEMBERS WITHOUT ENGINEER'S ACCEPTANCE.
7. PAINT ALL NON-GALVANIZED STEEL IN ACCORDANCE WITH SPECIFICATION 09 90 10. ALL PAINTED STEEL SHALL BE SYSTEM NO. 4 IN ACCORDANCE WIHT THE PAINTING AND COATING SCHEDULE IN SPECIFICATION 09 90 10 SECTION 3.6
8. DIMENSIONS: TO CENTERLINES OF COLUMNS AND BEAMS, TOP SURFACES OF BEAMS AND TUBES, AND BACKS OF CHANNELS AND ANGLES, UNO.
9. ELEVATIONS: TOP OF STEEL REFERS TO TOP SURFACE OF MEMBER OR FLANGE, UNO.
10. ALL BOLTED STRUCTURAL CONNECTIONS ARE BEARING TYPE CONNECTIONS UNLESS OTHERWISE SPECIFIED TO BE SLIP-CRITICAL.
11. ALL STRUCTURAL STEEL FABRICATION AND ERECTION SHALL CONFORM TO AISC 360 STEEL CONSTRUCTION MANUAL.
12. PLACE NATURAL CAMBER OF BEAMS UPWARD.
13. PROVIDE 3/8" STIFFENER PLATES ON EACH SIDE OF THE WEB OF ALL BEAMS AT ALL SUPPORTS THAT ARE BELOW THE BEAM.

G. FASTENERS AND ANCHORAGE

1. DRILL AND EPOXY ANCHORING SYSTEM SHALL BE:
   a. HILTI HIT HY-200
   b. DEWALT AC200+
   c. APPROVED EQUAL
   WITH MINIMUM ¾" DIAMETER WITH MINIMUM EMBEDMENT OF 6¾" UNLESS NOTED OTHERWISE.
2. EXPANSION BOLTS SHALL BE:
   a. HILTI KWIK-BOLT TZ
   b. DEWALT POWER-STUD + SD1
   c. APPROVED EQUAL
   WITH MINIMUM ¾" DIAMETER AND MINIMUM EMBEDMENT PER MANUFACTURER RECOMMENDATIONS.
3. ANCHOR BOLTS NOT SPECIFIED BY ENGINEER SHALL BE DESIGNED AND CERTIFIED BY A REGISTERED PROFESSIONAL ENGINEER, RETAINED BY THE CONTRACTOR, IN ACCORDANCE WITH APPLICABLE PROJECT AND CODE REQUIREMENTS. SUBMIT AS A SHOP DRAWING FOR REVIEW AND APPROVAL BY THE ENGINEER. COORDINATE LOCATION, SIZE, AND EMBEDMENT PRIOR TO CASTING CONCRETE.
4. ALL CAST-IN-PLACE AND POST-INSTALLED ANCHORS INDICATED IN THE STRUCTURAL DOCUMENTS SHALL COMPLY WITH ACI 318 AND CHAPTER 19 OF THE IBC. ALL EXPANSION AND ADHESIVE ANCHORS SHALL HAVE THE ICC REPORT SHOWING EQUIVALENT LOAD CAPACITY. SUBMIT AND INSTALL PER THE ICC EVALUATION.
5. PRIOR TO INSTALLING POST-INSTALLED ANCHORS INTO CONCRETE, THE CONTRACTOR SHALL LOCATE REINFORCING. DO NOT DAMAGE CONCRETE REINFORCING.

H. REPAIR MATERIALS

1. THE CONTRACTOR SHALL USE THE REPAIR MATERIAL LISTED BELOW OR AS NOTED IN THE CONSTRUCTION DOCUMENTS:
   a. SIKATOP 122 PLUS
   b. SIKAGARD 62
   c. SIKADUR 22 LO-MOD
   d. APPROVED EQUAL
2. THE CONTRACTOR SHALL PROVIDE SUBMITTALS FOR ALL REPAIR MATERIALS FOR APPROVAL PRIOR TO CONSTRUCTION.
3. THE CONTRACTOR SHALL INSTALL REPAIR MATERIALS IN ACCORDANCE WITH THE MANUFACTURERS RECOMMENDATIONS.

I. STRUT SYSTEM

1. THE CONTRACTOR SHALL PROVIDE A B-LINE STRUT SYSTEM OR APPROVED EQUAL.
2. ALL STRUT SYSTEM COMPONENTS SHALL BE HOT DIPPED GALVANIZED OR APPROVED ALTERNATE COATING.

J. STEEL ROOF DECK

1. THE DESIGN, FABRICATION, AND ERECTION OF METAL DECKING SHALL BE IN ACCORDANCE WITH THE CURRENT EDITION OF THE STEEL DECK INSTITUTE SPECIFICATIONS AND THE STEEL DECK INSTITUTE DIAPHRAGM MANUAL.
2. STEEL DECK SHALL BE 22 GAGE AS SPECIFIED BY THE STEEL DECK INSTITUTE AND AS SHOWN ON THE PLANS. DECK SHALL BE CAPABLE OF SUPPORTING THE DEAD AND LIVE LOADS INDICATED ON THE PLANS. DECK SHALL BE GALVANIZED AND CONNECTED AS INDICATED ON THE PLANS.
3. DECK SHALL HAVE A MINIMUM OF 2 INCHES BEARING AT ENDS AND 4 INCH MINIMUM AT INTERMEDIATE. LAP ENDS A MINIMUM OF 2 INCHES.
4. STEEL DECK ARE TO BE A STRUCTURAL DIAPHRAGM AND SHALL BE FASTENED AS SHOWN ON THE DRAWINGS.
5. STEEL DECK SHALL HAVE NO OPENINGS. IF OPENINGS ARE REQUIRED, CONTRACTOR SHALL SUBMIT IN WRITING TO THE ENGINEER OF RECORD LOCATION AND SIZE OF OPENINGS FOR APPROVAL.
6. THE PLANS INDICATE DECK SPAN DIRECTION.
7. CONNECTIONS FOR SUSPENDED CEILINGS, LIGHT FIXTURES, DUCTS, AND OTHER UTILITIES SUPPORTED FROM THE STEEL DECK SHALL BE SUBMITTED TO THE ENGINEER FOR APPROVAL PRIOR TO CONSTRUCTION.
8. DECK DESIGN IS BASED ON 2 SPAN CONDITIONS. SINGLE SPANS ARE NOT PERMITTED.

No.	DESCRIPTION	DATE	BY
1	BID SET	5/22/20	RKS
2			
3			
4			
5			
6			
7			

REVISIONS (OR CHANGE NOTICES)

Designed By: AECOM Imagine it. Delivered.
6501 Americas Pkwy NE, Suite 900
Albuquerque, New Mexico 87110
(505)-855-7500

Designed For: CITY OF RIO RANCHO

WASTEWATER TREATMENT PLANT 2 SOLIDS HANDLING IMPROVEMENTS

GENERAL STRUCTURAL NOTES 1

ROBERT E. HAWTHORNE — NEW MEXICO — NM 8178 — 5-22-2020 — REGISTERED PROFESSIONAL ENGINEER

PROJECT NO.	WW2030
DESIGNED BY:	RKS, REH
DRAWN BY:	CAM
CHECKED BY:	RKS, REH
DATE MODIFIED:	5-22-2020
DPW CHK:	

SHEET: S-1

STATEMENT OF STRUCTURAL SPECIAL INSPECTIONS PER IBC 2015

1. SPECIAL INSPECTIONS / TESTING -
"SPECIAL STRUCTURAL INSPECTIONS" ARE NOT TO BE CONFUSED WITH, NOR RELIEVE THE OWNER OR OWNER'S AGENT FROM THE JURISDICTION BUILDING DEPARTMENT INSPECTIONS REQUIRED BY IBC SECTION 110. SPECIAL INSPECTIONS DO NOT RELIEVE THE CONTRACTOR FROM COMPLYING WITH THE CONTRACT DOCUMENTS, MEANS AND METHODS AND JOBSITE SAFETY ARE SOLELY THE RESPONSIBILITY OF THE CONTRACTOR. SEE SPECIFICATIONS FOR ADDITIONAL TESTING REQUIREMENTS.

2. REPORTING FOR SPECIAL INSPECTION -
SPECIAL INSPECTION AND TESTING REPORTS SHALL BE COMPLETED AND DISTRIBUTED ON A WEEKLY BASIS. REPORT DEFICIENCIES THAT HAVE NOT BEEN RESOLVED IMMEDIATELY, PROVIDE COPIES OF REPORTS TO: CONTRACTOR, OWNER, ARCHITECT AND STRUCTURAL ENGINEER OF RECORD,SPECIAL INSPECTOR TO KEEP A NON-COMPLIANCE LIST DOCUMENTING ITEMS INSPECTED NOT MEETING APPROVED CONSTRUCTION DOCUMENTS AND WHEN / HOW RESOLVED.

3. REFER TO IBC SECTION 1705 AND ARCHITECTURAL, MECHANICAL, ELECTRICAL, AND PLUMBING CONSTRUCTION DOCUMENTS FOR ADDITIONAL NON-STRUCTURAL SPECIAL INSPECTION ITEMS.

4. ANY FABRICATOR NEEDS TO BE APPROVED BY THE JURISDICTION BUILDING DEPARTMENT OR BE CERTIFIED BY AN INDUSTRY RECOGNIZED AGENCY QUALIFIED FOR SUCH CERTIFICATION, CERTIFICATION OF FABRICATORS ARE TO BE PROVIDED TO THE STRUCTURAL ENGINEER, THE SPECIAL INSPECTION ITEMS CONTAINED HEREIN ARE REQUIRED FOR ALL NON-CERTIFIED FABRICATORS

5. DEFINITION OF "CONTINUOUS" AND "PERIODIC" SPECIAL INSPECTIONS:
CONTINUOUS: THE FULL-TIME OBSERVATION OF WORK REQUIRING SPECIAL INSPECTION BY AN APPROVED SPECIAL INSPECTOR WHO IS PRESENT IN THE AREA WHERE THE WORK IS BEING PERFORMED.

PERIODIC: THE PART-TIME OR INTERMITTENT OBSERVATION OF WORK REQUIRING SPECIAL INSPECTION BY AN APPROVED SPECIAL INSPECTOR WHO IS PRESENT IN THE AREA WHERE THE WORK HAS BEEN OR IS BEING PERFORMED AND AT THE COMPLETION OF THE WORK.

WHERE "PERIODIC" SPECIAL INSPECTION IS REQUIRED, "PART-TIME" OR "INTERMITTENT" MEANS THAT INSPECTION OF THE TASK SHOULD BE PERFORMED FROM TIME TO TIME DURING THE PROGRESS OF THE TASK. THE PERIOD OF TIME BETWEEN INSPECTIONS VARIES GREATLY FOR DIFFERENT TYPES OF WORK DEPENDING ON THE TYPE OF INSPECTION DONE.

THE PERIOD OF TIME BETWEEN INSPECTIONS ALSO DEPENDS ON THE PACE OF THE CONSTRUCTION, THE NUMBER OF WORKERS, THE QUALITY OF THE WORKMANSHIP, AND OTHER FACTORS. IT IS THE RESPONSIBILITY OF THE SPECIAL INSPECTOR TO PROVIDE INSPECTIONS AT AN APPROPRIATE FREQUENCY AND AT APPROPRIATE TIMES DURING CONSTRUCTION, THE INSPECTOR MUST HAVE ADEQUATE EXPERIENCE AND EXHIBIT GOOD JUDGEMENT IN DETERMINING THE TIMING AND FREQUENCY OF INSPECTIONS.

SPECIAL INSPECTION OF SEISMIC FORCE RESISTING AND DESIGNATED SYSTEMS

SPECIAL INSPECTION REQUIRED Y/N	VERIFICATION AND INSPECTION TASK	FREQUENCY OF INSPECTION: CONTINUOUS DURING TASK LISTED	FREQUENCY OF INSPECTION: PERIODICALLY DURING TASK LISTED	REFERENCE FOR CRITERIA: IBC SECTION	COMMENTS
	1. STRUCTURAL STEEL: (SDC B OR C WITH R>3 OR CANTILEVER COLUMNS, AND ALL SD D, E, OR F STRUCTURES)				
Y	a. SEISMIC-FORCE-RESISTING SYSTEM: SPECIAL INSPECTIONS OF STRUCTURAL STEEL IN THE SEISMIC-FORCE-RESISTING SYSTEMS OF BUILDING AND STRUCTURES SHALL BE PERFORMED IN ACCORDANCE WITH THE QUALITY ASSURANCE REQUIREMENTS OF AISC 341.	REFER TO SPECIAL INSPECTION AND VERIFICATION OF STEEL SEISMIC FORCE RESISTANCE SYSTEMS TABLES		1705.12.1.1	
Y	b. STRUCTURAL STEEL ELEMENTS: SPECIAL INSPECTIONS OF STRUCTURAL STEEL ELEMENTS IN THE SEISMIC-FORCE-RESISTING SYSTEMS OF BUILDINGS AND STRUCTURES OTHER THAN THOSE COVERED ABOVE, INCLUDING STRUTS, COLLECTORS, CHORDS, AND FOUNDATION ELEMENTS SHALL BE PERFORMED IN ACCORDANCE WITH THE QUALITY ASSURANCE REQUIREMENTS OF AISC 341	REFER TO SPECIAL INSPECTION AND VERIFICATION OF STEEL SEISMIC FORCE RESISTANCE SYSTEMS TABLES		1705.12.1.2	
	2. COLD-FORMED STEEL FRAMING: (SDC C, D, E, OR F)				
Y	a. WELDING OPERATIONS OF ELEMENTS OF THE SEISMIC-FORCE-RESISTING SYSTEM.	—	X	1705.12.3	
Y	b. SCREW ATTACHMENTS, BOLTING, ANCHORING, AND OTHER FASTENING OF ELEMENTS OF THE SEISMIC-FORCE-RESISTING SYSTEM, INCLUDING SHEAR WALLS, BRACES, DIAPHRAGMS, COLLECTORS (DRAG STRUTS), AND HOLD DOWNS.	—	X	1705.12.3	

STRUCTURAL TESTING FOR SEISMIC RESISTANCE OF SEISMIC FORCE RESISTING SYSTEMS

SPECIAL INSPECTION REQUIRED Y/N	VERIFICATION AND TESTING TASK	FREQUENCY OF TESTING: CONTINUOUS DURING TASK LISTED	FREQUENCY OF TESTING: PERIODICALLY DURING TASK LISTED	REFERENCE FOR CRITERIA: IBC SECTION	COMMENTS
	1. STRUCTURAL STEEL: (SDC B OR C WITH R>3 OR CANTILEVER COLUMNS, AND ALL SD D, E, OR F STRUCTURES)				
Y	a. SEISMIC-FORCE-RESISTING SYSTEM: NONDESTRUCTIVE TESTING OF STRUCTURAL STEEL IN THE SEISMIC-FORCE-RESISTING SYSTEMS OF BUILDING AND STRUCTURES SHALL BE PERFORMED IN ACCORDANCE WITH THE QUALITY ASSURANCE REQUIREMENTS OF AISC 341.	PER AISC 341	PER AISC 341	1705.13.1.1	
Y	b. STRUCTURAL STEEL ELEMENTS: NONDESTRUCTIVE TESTING OF STRUCTURAL STEEL ELEMENTS IN THE SEISMIC-FORCE-RESISTING SYSTEMS OF BUILDINGS AND STRUCTURES OTHER THAN THOSE COVERED ABOVE, INCLUDING STRUTS, COLLECTORS, CHORDS, AND FOUNDATION ELEMENTS SHALL BE PERFORMED IN ACCORDANCE WITH THE QUALITY ASSURANCE REQUIREMENTS OF AISC 341	PER AISC 341	PER AISC 341	1705.13.1.2	
Y	2. SEISMIC CERTIFICATION OF NON-STRUCTURAL COMPONENTS (SDC B, C, D, E, OR F)	PER CONSTRUCTION DOCUMENTS		1705.13.2	
Y	3. DESIGNATED SEISMIC SYSTEMS (SDC C, D, E, OR F)	PER CONSTRUCTION DOCUMENTS		1705.13.3	

SPECIAL INSPECTIONS AND TESTS OF CONCRETE CONSTRUCTION

SPECIAL INSPECTION REQUIRED Y/N	TYPE	CONTINUOUS SPECIAL INSPECTION	PERIODIC SPECIAL INSPECTION	REFERENCED STANDARD	IBC REFERENCE	COMMENTS
Y	1. INSPECT REINFORCEMENT, INCLUDING PRESTRESSING TENDONS, AND VERIFY PLACEMENT.	—	X	ACI 318 CH. 20, 25.2, 25.3, 26.5.1-26.5.3	1908.4	
Y	3. INSPECT ANCHORS CAST IN CONCRETE	—	X	ACI 318: 17.8.2	—	
	4. INSPECTION OF ANCHORS POST-INSTALLED IN HARDENED CONCRETE MEMBERS.					
Y	a. ADHESIVE ANCHORS INSTALLED IN HORIZONTALLY OR UPWARDLY INCLINED ORIENTATIONS TO RESIST SUSTAINED TENSION LOADS.	X	—	ACI 318: 17.8.2.4	—	
Y	b. MECHANICAL ANCHORS AND ADHESIVE ANCHORS NOT DEFINED IN 4.a.	—	X	ACI 318: 17.8.2	—	
Y	5. VERIFY USE OF REQUIRED DESIGN MIX.	—	X	ACI 318: CH.19, 26.4.3, 26.4.4	1904.1, 1904.2, 1908.2, 1908.3	
Y	6. PRIOR TO CONCRETE PLACEMENT, FABRICATE SPECIMENS FOR STRENGTH TESTS, PERFORM SLUMP AND AIR CONTENT TESTS, AND DETERMINE THE TEMPERATURE OF THE CONCRETE.	X	—	ASTM C 172 ASTM C 31 ACI 318: 26.4.5, 26.12	1908.10	
Y	7. INSPECT CONCRETE AND SHOTCRETE PLACEMENT FOR PROPER APPLICATION TECHNIQUES.	X	—	ACI 318: 26.4.5	1908.6, 1908.7, 1908.8	
Y	8. VERIFY MAINTENANCE OF SPECIFIED CURING TEMPERATURE AND TECHNIQUES.	—	X	ACI 318: 26.4.7-26.4.9	1908.9	
Y	12. INSPECT FORMWORK FOR SHAPE, LOCATION AND DIMENSIONS OF THE CONCRETE MEMBER BEING FORMED.	—	X	ACI 318: 26.10.1(b)	—	

SPECIAL INSPECTION AND VERIFICATION OF COLD-FORMED STEEL DECK

SPECIAL INSPECTION REQUIRED Y/N	VERIFICATION AND INSPECTION TASK	TYPE OF INSPECTION: QUALITY CONTROL TASK	TYPE OF INSPECTION: QUALITY ASSURANCE TASK	REFERENCED STANDARD	COMMENTS
	1. INSPECTION OR EXECUTION TASKS PRIOR TO DECK PLACEMENT:			SDI-ANSI-QA-QC-2011 TABLE 1.1	
Y	a. VERIFY COMPLIANCE OF MATERIALS (DECK AND ALL DECK ACCESSORIES) WITH CONSTRUCTION DOCUMENTS, INCLUDING PROFILES , MATERIAL PROPERTIES, AND BASE MATERIAL THICKNESS.	P	P		
Y	b. DOCUMENT ACCEPTANCE OR REJECTION OF DECK AND DECK ACCESSORIES.	P	P		
	2. INSPECTION OR EXECUTION TASKS AFTER DECK PLACEMENT:			SDI-ANSI-QA-QC-2011 TABLE 1.2	
Y	a. VERIFY COMPLIANCE OF DECK AND ALL DECK ACCESSORIES INSTALLATION WITH CONSTRUCTION DOCUMENTS.	P	P		
Y	b. VERIFY DECK MATERIALS ARE REPRESENTED BY MILL CERTIFICATIONS THAT COMPLY WITH THE CONSTRUCTION DOCUMENTS.	—	P		
Y	c. DOCUMENT ACCEPTANCE OR REJECTION OF INSTALLATION OF DECK AND DECK ACCESSORIES.	P	P		
	3. INSPECTION OR EXECUTION TASKS PRIOR TO WELDING:			SDI-ANSI-QA-QC-2011 TABLE 1.3	
Y	a. WELDING PROCEDURE SPECIFICATIONS (WPS) AVAILABLE.	O	O		
Y	b. MANUFACTURER CERTIFICATIONS FOR WELDING CONSUMABLES AVAILABLE.	O	O		
Y	c. MATERIAL IDENTIFICATION (TYPE/GRADE)	O	O		
Y	d. CHECK WELDING EQUIPMENT.	O	O		
	4. INSPECTION EXECUTION TASKS DURING WELDING:			SDI-ANSI-QA-QC-2011 TABLE 1.4	
Y	a. USE OF QUALIFIED WELDERS	O	O		
Y	b. CONTROL AND HANDLING OF WELDING CONSUMABLES.	O	O		
Y	c. ENVIRONMENT CONDITIONS (WIND SPEED, MOISTURE, TEMPERATURE)	O	O		
Y	d. WPS FOLLOWED	O	O		
	5. INSPECTION OR EXECUTION TASKS AFTER WELDING:			SDI-ANSI-QA-QC-2011 TABLE 1.5	
Y	a. VERIFY SIZE AND LOCATION OF WELDS, INCLUDING SUPPORT, SIDELAP, AND PERIMETER WELDS.	P	P		
Y	a. WELDS MEET VISUAL ACCEPTANCE CRITERIA.	P	P		
Y	a. VERIFY REPAIR ACTIVITIES.	P	P		
Y	a. DOCUMENT ACCEPTANCE OR REJECTION OR WELDS.	P	P		
	6. INSPECTION OR EXECUTION TASKS PRIOR TO MECHANICAL FASTENING:			SDI-ANSI-QA-QC-2011 TABLE 1.6	
Y	a. MANUFACTURER INSTALLATION INSTRUCTIONS AVAILABLE FOR MECHANICAL FASTENERS.	O	O		
Y	b. PROPER TOOLS AVAILABLE FOR FASTENER INSTALLATION.	O	O		
Y	c. PROPER STORAGE FOR MECHANICAL FASTENERS.	O	O.		
	7. INSPECTION OR EXECUTION TASKS DURING TO MECHANICAL FASTENING:			SDI-ANSI-QA-QC-2011 TABLE 1.7	
Y	a. FASTENERS ARE POSITIONED AS REQUIRED.	O	O		
Y	b. FASTENERS ARE INSTALLED IN ACCORDANCE WITH MANUFACTURER'S INSTRUCTIONS.	O	O		
	8. INSPECTION OR EXECUTION TASKS AFTER MECHANICAL FASTENING:			SDI-ANSI-QA-QC-2011 TABLE 1.8	
Y	a. CHECK SPACING, TYPE, AND INSTALLATION OF SUPPORT FASTENERS.	P	P		
Y	b. CHECK SPACING, TYPE AND INSTALLATION OR SIDELAP FASTENERS.	P	P		
Y	c. CHECK SPACING, TYPE AND INSTALLATION OF PERIMETER FASTENERS.	P	P		
Y	d. VERIFY REPAIR ACTIVITIES.	P	P		
Y	e. DOCUMENT ACCEPTANCE OR REJECTION OF MECHANICAL FASTENERS.	P	P		

O: ITEMS NEED TO BE OBSERVED ON A INTERMITTENT BASIS. OPERATIONS NEED NOT BE DELAYED PENDING THESE INSPECTIONS. FREQUENCY OF OBSERVATIONS SHALL BE ADEQUATE TO CONFIRM THAT WORK WAS PERFORMED IN ACCORDANCE WITH THE APPLICABLE DOCUMENTS.

P: ITEMS NEED TO BE PERFORMED PRIOR TO FINAL ACCEPTANCE FOR EACH ITEM OR ELEMENT.

WITHIN THE LISTED TASKS, "DOCUMENT" SHALL MEAN THE INSPECTOR SHALL PREPARE, REPORTS OR OTHER APPROPRIATE WRITTEN DOCUMENTATION INDICATING THAT WORK HAS OR HAS NOT BEEN PERFORMED IN ACCORDANCE WITH THE CONSTRUCTION DOCUMENTS.

LEVEL B QUALITY ASSURANCE OF MASONRY (TMS 402-13/ACI 530-13/ASCE 5-13 TABLE 3.1.2)

SPECIAL INSPECTION REQUIRED Y/N	MINIMUM TESTS	COMMENTS
Y	VERIFICATION OF SLUMP FLOW AND VISUAL STABILITY INDEX (VSI) AS DELIVERED TO THE PROJECT SITE IN ACCORDANCE WITH SPECIFICATION ARTICLE 1.5 B.1.b.3 FOR SELF-CONSOLIDATING GROUT.	
Y	VERIFICATION OF f'_m AND f'_{AAC} IN ACCORDANCE WITH SPECIFICATION ARTICLE 1.4.B PRIOR TO CONSTRUCTION, EXCEPT WHERE SPECIFICALLY EXEMPTED BY TMS 402-13/ACI 1530-13/ASCE 5-13..	

	MINIMUM SPECIAL INSPECTION: INSPECTION TASK	FREQUENCY (a): CONTINUOUS	FREQUENCY (a): PERIODIC	REFERENCE FOR CRITERIA: TMS 402 / ACI 530 / ASCE 5	REFERENCE FOR CRITERIA: TMS 602 / ACI 530.1 / ASCE 6	COMMENTS
Y	1. VERIFY COMPLIANCE WITH THE APPROVED SUBMITTALS.	—	X	—	ART. 1.5	
	2. AS MASONRY CONSTRUCTION BEGINS, VERIFY THAT THE FOLLOWING ARE IN COMPLIANCE:					
Y	a. PROPORTIONS OF SITE-PREPARED MORTAR.	—	X	—	ART. 2.1, 2.6 A	
Y	b. CONSTRUCTION OF MORTAR JOINTS.	—	X	—	ART. 3.3 B	
Y	d. LOCATION OF REINFORCEMENT, CONNECTORS, PRESTRESSING TENDONS, AND ANCHORAGES.	—	X	—	ART. 3.4, 3.6 A	
	3. PRIOR TO GROUTING, VERIFY THAT THE FOLLOWING ARE IN COMPLIANCE:					
Y	a. GROUT SPACE.	—	X	—	ART. 3.2 D.3.2 F	
Y	b. GRADE, TYPE, AND SIZE OF REINFORCEMENT AND ANCHOR BOLTS, AND PRESTRESSING TENDONS AND ANCHORAGES.	—	X	SEC. 6.1	ART. 2.4, 3.4	
Y	c. PLACEMENT OF REINFORCEMENT, CONNECTORS, AND PRESTRESSING TENDONS AND ANCHORAGES.	—	X	SEC. 6.1, 6.2.1, 6.2.6, 6.2.7	ART. 3.2 E, 3.4, 3.6 A	
Y	d. PROPORTIONS OF SITE-PREPARED GROUT AND PRESTRESSING GROUT FOR BONDED TENDONS.	—	X	—	ART. 2.6 B, 2.4 G.1.b	
Y	e. CONSTRUCTION OF MORTAR JOINTS.	—	X	—	ART. 3.3 B	
	4. VERIFY DURING CONSTRUCTION:					
Y	a. SIZE AND LOCATION OF STRUCTURAL ELEMENTS.	—	X	—	ART. 3.3 F	
Y	b. TYPE, SIZE, AND LOCATION OF ANCHORS, INCLUDING OTHER DETAILS OF ANCHORAGE OF MASONRY TO STRUCTURAL MEMBERS, FRAMES, OR OTHER CONSTRUCTION.	—	X	SEC.1.2.1(e), 6.1.4.3, 6.2.1	—	
Y	d. PREPARATION, CONSTRUCTION, AND PROTECTION OF MASONRY DURING COLD WEATHER (TEMPERATURE BELOW 40°F) OR HOT WEATHER (TEMPERATURE ABOVE 90°F).	—	X	—	ART. 1.8 C, 1.8 D	
Y	f. PLACEMENT OF GROUT AND PRESTRESSING GROUT FOR BONDED TENDONS IS IN COMPLIANCE.	X	—	—	ART. 3.5, 3.6 C	
Y	h. INSTALLATION OF POST-INSTALLED ANCHORS ACCORDING TO MANUFACTURER'S PRINTED INSTALLATION INSTRUCTIONS. VERIFY ANCHOR DIMENSIONS, ADHESIVE IDENTIFICATION AND EXPIRATION DATE, HOLE DIMENSION, EDGE DISTANCES, EMBEDMENT DEPTH, TIGHTENING TORQUE, BASE-MATERIAL TEMPERATURE.	X(d)	X(e)	—	SEANM	
Y	5. OBSERVE PREPARATION OF GROUT SPECIMENS, MORTAR SPECIMENS, AND/OR PRISMS.	—	X	—	ART. 1.4B.2,a.3, 1.4 B.2,b.3, 1.4 B.2,c.3, 1.4 B.3, 1.4 B.4	
	(a) FREQUENCY REFERS TO THE FREQUENCY OF SPECIAL INSPECTIONS, WHICH MAY BE CONTINUOUS DURING THE TASK LISTED OR PERIODIC DURING THE LISTED TASK, AS DEFINED IN THE TABLE.					
	(b) REQUIRED FOR THE FIRST 5000 SQUARE FEET (465 SQUARE METERS) OF AAC MASONRY.					
	(c) REQUIRED AFTER THE FIRST 5000 SQUARE FEET (465 SQUARE METERS) OF AAC MASONRY.					
	(d) REQUIRED FOR THE FIRST 10% OF EACH DIFFERENT TYPE OF ANCHOR AND/OR INSTALLER.					
	(e) REQUIRED FOR THE REMAINING 90% OF EACH DIFFERENT TYPE OF ANCHOR AND/OR INSTALLER.					

SPECIAL INSPECTION AND VERIFICATION OF COLD FORMED METAL FRAMING

SPECIAL INSPECTION REQUIRED Y/N	VERIFICATION AND INSPECTION TASK	FREQUENCY OF INSPECTION: CONTINUOUS DURING TASK LISTED	FREQUENCY OF INSPECTION: PERIODICALLY DURING TASK LISTED	REFERENCE FOR CRITERIA: IBC SECTION	COMMENTS
Y	1. STRUCTURAL STUD SIZE AND GAGE.	—	X	SEANM	
Y	2. PROPER SEATING OF STUDS IN TRACK.	—	X	SEANM	
Y	3. STUD HEADER SIZE, GAGE, AND CONSTRUCTION PER STRUCTURAL DRAWINGS.	—	X	SEANM	
Y	4. SCREW ATTACHMENTS, BOLTING, ANCHORING, AND OTHER FASTENING OF COMPONENTS PER CONSTRUCTION DOCUMENTS.	—	X	SEANM	
Y	5. WELDING OF ELEMENTS PER CONSTRUCTION DOCUMENTS.	—	X	SEANM	
Y	6. STEEL STUD BRIDGING SPACING AND END ATTACHMENT.	—	X	SEANM	
Y	7. SHEAR WALL STRAP SIZE, LOCATION AND WELDING PER CONSTRUCTION DOCUMENTS.	—	X	SEANM	
Y	8. SHEAR WALL ANCHORAGE AND DIAPHRAGM CONNECTION PER CONSTRUCTION DOCUMENTS.	—	X	SEANM	

No.	DESCRIPTION	DATE	BY
1	BID SET	5/22/20	RKS
2			
3			
4			
5			
6			
7			

REVISIONS (OR CHANGE NOTICES)

Designed By: AECOM — Imagine it. Delivered. — One Park Square, 6501 Americas Pkwy NE, Suite 900, Albuquerque, New Mexico 87110, (505)-855-7500

Designed For: CITY OF RIO RANCHO

WASTEWATER TREATMENT PLANT 2 SOLIDS HANDLING IMPROVEMENTS

SPECIAL INSPECTION TABLES

ROBERT E. HAWTHORNE, NEW MEXICO, 8178, 5-22-2020, REGISTERED PROFESSIONAL ENGINEER

PROJECT NO.	WW2030
DESIGNED BY:	RKS, REH
DRAWN BY:	CAM
CHECKED BY:	RKS, REH
DATE MODIFIED:	5-22-2020
DPW CHK:	

SHEET: S-2

DWG: L:\d0610126 Rio Rancho - Solids Dewatering Design\400-CAD-GIS\410-CAD\01-SHEETS\S-2.dwg USED: jesse.higgins
DATE: May 22, 2020 - 12:29pm WARES: Imperial_Landscape_24x36_300dpi.jpg

SPECIAL INSPECTION AND VERIFICATION OF STEEL CONSTRUCTION					
SPECIAL INSPECTION REQUIRED Y/N	VERIFICATION AND INSPECTION TASK	TYPE OF INSPECTION: QUALITY CONTROL TASK	TYPE OF INSPECTION: QUALITY ASSURANCE TASK	REFERENCED STANDARD	COMMENTS
	1. INSPECTION TASKS PRIOR TO WELDING:			AISC 360 TABLE N5.4-1	
Y	a. WELDING PROCEDURE SPECIFICATIONS (WPSs) AVAILABLE.	P	P		
Y	b. MANUFACTURER CERTIFICATIONS FOR WELDING CONSUMABLES AVAILABLE.	P	P		
Y	c. MATERIAL IDENTIFICATION (TYPE/GRADE).	O	O		
Y	d. WELDER IDENTIFICATION SYSTEM.	O	O		
Y	e. FIT-UP OF GROOVE WELDS (INCLUDING JOINT GEOMETRY).	O	O		
	1) JOINT PREPARATION.				
	2) DIMENSIONS (ALIGNMENT, ROOT FACE, BEVEL)				
	3) CLEANLINESS (CONDITION OF STEEL SURFACES)				
	4) TACKING (TACK WELD QUALITY AND LOCATION)				
	5) BACKING TYPE AND FIT (IF APPLICABLE)				
Y	f. CONFIGURATION AND FINISH OF ACCESS HOLES.	O	O		
Y	g. FIT-UP OF FILLET WELDS.	O	O		
	1) DIMENSIONS (ALIGNMENT, GAPS AT ROOT)				
	2) CLEANLINESS (CONDITION OF STEEL SURFACES)				
	3) TACKING (TACK WELD QUALITY AND LOCATION)				
Y	h. CHECK WELDING EQUIPMENT.	O	—		
	2. INSPECTION TASKS DURING WELDING:			AISC 360 TABLE N5.4-2	
Y	a. USE OF QUALIFIED WELDERS.	O	O		
Y	b. CONTROL AND HANDLING OF WELDING CONSUMABLES.	O	O		
	1) PACKAGING				
	2) EXPOSURE CONTROL				
Y	c. NO WELDING OVER CRACKED TACK WELDS.	O	O		
Y	d. ENVIRONMENTAL CONDITIONS.	O	O		
	1) WIND SPEED WITHIN LIMITS				
	2) PRECIPITATION AND TEMPERATURE				
Y	e. WPS FOLLOWED.	O	O		
	1) SETTINGS ON WELDING EQUIPMENT.				
	2) TRAVEL SPEED				
	3) SELECTED WELDING MATERIALS				
	4) SHIELDING GAS TYPE/FLOW RATE				
	5) PREHEAT APPLIED				
	6) INTERPASS TEMPERATURE MAINTAINED (MIN/MAX)				
	7) PROPER POSITION (F, V, H, OH)				
Y	f. WELDING TECHNIQUES.	O	O		
	1) INTERPASS AND FINAL CLEANING.				
	2) EACH PASS WITHIN PROFILE LIMITATIONS.				
	3) EACH PASS MEETS QUALITY REQUIREMENTS.				
	3. INSPECTION TASKS AFTER WELDING:			AISC 360 TABLE N5.4-3	
Y	a. WELDS CLEANED.	O	O		
Y	b. SIZE, LENGTH, AND LOCATION OF WELDS.	P	P		
Y	c. WELDS MEET VISUAL ACCEPTANCE CRITERIA.	P	P		
	1) CRACK PROHIBITION				
	2) WELD/BASE-METAL FUSION				
	3) CRATER CROSS SECTION				
	4) WELD PROFILES				
	5) WELD SIZE				
	6) UNDERCUT				
	7) POROSITY				
Y	d. ARC STRIKES.	P	P		
Y	e. k-AREA.	P	P		
Y	f. BACKING REMOVED AND WELD TABS REMOVED (IF REQUIRED).	P	P		
Y	g. REPAIR ACTIVITIES.	P	P		
Y	h. DOCUMENT ACCEPTANCE OR REJECTION OF WELDED JOINT OR MEMBER.	P	P		
	4. INSPECTION TASKS PRIOR TO BOLTING:			AISC 360 TABLE N5.6-1	
Y	a. MANUFACTURER'S CERTIFICATIONS AVAILABLE FOR FASTENER MATERIALS.	O	P		
Y	b. FASTENERS MARKED IN ACCORDANCE WITH ASTM REQUIREMENTS.	O	O		
Y	c. PROPER FASTENERS SELECTED FOR THE JOINT DETAIL.	O	O		
	1) GRADE				
	2) TYPE				
	3) BOLT LENGTH IF THREADS ARE TO BE EXCLUDED FROM SHEAR PLANE				
Y	d. CONNECTING ELEMENTS, INCLUDING THE APPROPRIATE FAYING SURFACE CONDITION AND HOLE PREPARATION, IF SPECIFIED, MEET APPLICABLE REQUIREMENTS.	O	O		
Y	e. PRE-INSTALLATION VERIFICATION TESTING BY INSTALLATION PERSONNEL OBSERVED AND DOCUMENTED FOR FASTENER ASSEMBLIES AND METHODS USED.	P	O		
Y	f. PROPER STORAGE PROVIDED FOR BOLTS, NUTS, WASHERS, AND OTHER FASTENER COMPONENTS.	O	O		
	5. INSPECTION TASKS DURING BOLTING:			AISC 360 TABLE N5.6-2	
Y	a. FASTENER ASSEMBLIES, OF SUITABLE CONDITION, PLACED IN ALL HOLES AND WASHERS (IF REQUIRED) ARE POSITIONED AS REQUIRED.	O	O		
Y	b. JOINT BROUGHT TO THE SNUG-TIGHT CONDITION PRIOR TO THE PRETENSIONING OPERATION.	O	O		
Y	c. FASTENER COMPONENT NOT TURNED BY THE WRENCH PREVENTED FROM ROTATING.	O	O		
Y	d. FASTENERS ARE PRETENSIONED IN ACCORDANCE WITH THE RCSC SPECIFICATION, PROGRESSING SYSTEMATICALLY FROM THE MOST RIGID POINT TOWARD THE FREE EDGES.	O	O		
	6. INSPECTION TASKS AFTER BOLTING:			AISC 360 TABLE N5.6-3	
Y	a. DOCUMENT ACCEPTANCE OR REJECTION OF BOLTED CONNECTIONS.	P	P		
	7. INSPECTION OF STEEL ELEMENTS OF COMPOSITE CONSTRUCTION PRIOR TO PLACEMENT.			AISC 360 TABLE N6.1	
Y	a. PLACEMENT AND INSTALLATION OF STEEL DECK.	P	P		
Y	b. PLACEMENT AND INSTALLATION OF STEEL HEADED STUD ANCHORS.	P	P		
Y	c. DOCUMENT ACCEPTANCE OR REJECTION OF STEEL ELEMENTS.	P	P		
	8. INSPECTION OF ANCHOR ROD PLACEMENT AND PLACEMENT OF EMBEDDED ITEMS.			AISC 360 SECTION N5.7	
Y	a. DIAMETER, GRADE, TYPE, AND LENGTH OF ANCHOR ROD OR EMBEDDED ITEM.	P	P		
Y	b. EXTENT OR DEPTH OF EMBEDMENT INTO CONCRETE.	P	P		
Y	9. INSPECTION OF THE FABRICATED STEEL OR ERECTED STEEL FRAME TO VERIFY COMPLIANCE WITH THE DETAILS SHOWN ON THE CONSTRUCTION DOCUMENTS.	P	P	AISC 360 SECTION N5.7	
O: ITEMS NEED TO BE OBSERVED ON A RANDOM BASIS, OPERATIONS NEED NOT BE DELAYED PENDING THESE INSPECTIONS.					
P: ITEMS NEED TO BE PERFORMED FOR EACH WELD JOINT OR MEMBER.					

SPECIAL INSPECTION AND VERIFICATION OF STEEL SEISMIC FORCE RESISTANCE SYSTEMS							
NOT REQUIRED FOR SPECIAL DESIGN CATEGORY A, NOR SPECIAL DESIGN CATEGORY B AND C WHEN STEEL SYSTEMS NOT SPECIFICALLY DETAILED FOR SEISMIC RESISTANCE (R=3) ARE USED, EXCLUDING CANTILEVER COLUMN SYSTEMS.							
SPECIAL INSPECTION REQUIRED Y/N	VERIFICATION AND INSPECTION TASK	TYPE OF INSPECTION: QUALITY CONTROL TASK	TYPE OF INSPECTION: QUALITY CONTROL DOCUMENT	TYPE OF INSPECTION: QUALITY ASSURANCE TASK	TYPE OF INSPECTION: QUALITY ASSURANCE DOCUMENT	REFERENCED STANDARD	COMMENTS
	1. VISUAL INSPECTION TASKS PRIOR TO WELDING:					AISC 341 TABLE J6-1	
Y	a. FIT-UP OF GROOVE WELDS (INCLUDING JOINT GEOMETRY).	P/O	—	O	—		
	1) JOINT PREPARATION.						
	2) DIMENSIONS (ALIGNMENT, ROOT FACE, BEVEL)						
	3) CLEANLINESS (CONDITION OF STEEL SURFACES)						
	4) TACKING (TACK WELD QUALITY AND LOCATION)						
	5) BACKING TYPE AND FIT (IF APPLICABLE)						
Y	b. FIT-UP OF FILLET WELDS.	P/O	—	O	—		
	1) DIMENSIONS (ALIGNMENT, GAPS AT ROOT)						
	2) CLEANLINESS (CONDITION OF STEEL SURFACES)						
	3) TACKING (TACK WELD QUALITY AND LOCATION)						
	2. VISUAL INSPECTION TASKS DURING WELDING:					AISC 341 TABLE J6-2	
	1) PRECIPITATION AND TEMPERATURE.						
Y	a. WELDING PROCEDURE SPECIFICATIONS (WPS) FOLLOWED.	O	—	O	—		
	1) INTERMIX OF FILLER METALS AVOIDED UNLESS APPROVED.						
	3. VISUAL INSPECTION TASKS AFTER WELDING:					AISC 341 TABLE J6-3	
Y	a. WELDS MEET VISUAL ACCEPTANCE CRITERIA.	P	D	P	D		
	1) CRACK PROHIBITION.						
	2) WELD/BASE-METAL FUSION.						
	3) CRATER CROSS SECTION.						
	4) WELD PROFILES AND SIZES.						
	5) UNDERCUT.						
	6) POROSITY.						
Y	b. PLACEMENT OF REINFORCING OR CONTOURING FILLET WELDS	P	D	P	D		
Y	c. BACKING REMOVED AND WELD TABS REMOVED AND FINISHED AND FILLET WELDS ADDED (IF REQUIRED)	P	D	P	D		
Y	d. REPAIR ACTIVITIES.	P	—	P	—		
	4. INSPECTION TASKS PRIOR TO BOLTING:					AISC 341 TABLE J7-1	
Y	a. PROPER BOLTING PROCEDURE SELECTED FOR JOINT DETAIL.	O	—	O	—		
Y	b. PRE-INSTALLATION VERIFICATION TESTING BY INSTALLATION PERSONNEL OBSERVED FOR FASTENER ASSEMBLIES AND METHODS USED.	P	D	P	D		
	5. INSPECTION TASKS AFTER BOLTING:					AISC 341 TABLE J7-3	
Y	a. DOCUMENT ACCEPTED OR REJECTED CONNECTIONS.	P	D	P	D		

SPECIAL INSPECTION AND VERIFICATION OF STEEL SEISMIC FORCE RESISTANCE SYSTEMS							
NOT REQUIRED FOR SPECIAL DESIGN CATEGORY A, NOR SPECIAL DESIGN CATEGORY B AND C WHEN STEEL SYSTEMS NOT SPECIFICALLY DETAILED FOR SEISMIC RESISTANCE (R=3) ARE USED, EXCLUDING CANTILEVER COLUMN SYSTEMS.							
SPECIAL INSPECTION REQUIRED Y/N	VERIFICATION AND INSPECTION TASK	TYPE OF INSPECTION: QUALITY CONTROL TASK	TYPE OF INSPECTION: QUALITY CONTROL DOCUMENT	TYPE OF INSPECTION: QUALITY ASSURANCE TASK	TYPE OF INSPECTION: QUALITY ASSURANCE DOCUMENT	REFERENCED STANDARD	COMMENTS
	6. OTHER INSPECTION TASKS:					AISC 341 TABLE J8-1	
Y	a. RBS REQUIREMENTS, IF APPLICABLE.	P	D	P	D		
	1) CONTOUR AND FINISH.						
	2) DIMENSION TOLERANCES.						
Y	b. PROTECTED ZONE - NO HOLES AND UNAPPROVED ATTACHMENTS MADE BY FABRICATION OR ERECTION, AS APPLICABLE.	P	D	P	D		
	7. INSPECTION OF COMPOSITE STRUCTURES PRIOR TO CONCRETE PLACEMENT:					AISC 341, TABLE J9-1	
Y	a. MATERIAL IDENTIFICATION OF REINFORCING STEEL (TYPE/GRADE)	O	—	O	—		
Y	b. DETERMINATION OF CARBON EQUIVALENT FOR REINFORCING STEEL OTHER THAN ASIM A706.	O	—	O	—		
Y	c. REINFORCING STEEL SIZE, SPACING, AND ORIENTATION.	O	—	O	—		
Y	d. REINFORCING STEEL HAS NOT BEEN REBENT IN FIELD.	O	—	O	—		
Y	e. REINFORCING STEEL HAS BEEN TIED AND SUPPORTED AS REQUIRED.	O	—	O	—		
Y	f. REQUIRED REINFORCING STEEL CLEARANCES HAVE BEEN PROVIDED.	O	—	O	—		
Y	g. COMPOSITE MEMBER HAS REQUIRED SIZE.	O	—	O	—		
	8. INSPECTION OF COMPOSITE STRUCTURES DURING CONCRETE PLACEMENTS:					AISC 341, TABLE J9-2	
Y	a. CONCRETE: MATERIAL IDENTIFICATION (MZX DESIGN, COMPRESSIVE STRENGTH, MAXIMUM LARGE AGGREGATE SIZE, MAXIMUM SLUMP)	O	D	O	D		
Y	b. LIMITS OF WATER ADDED AT TRUCK OR PUMP.	O	D	O	D		
Y	c. PROPER PLACEMENT TECHNIQUES TO LIMIT SEGREGATION.	O	—	O	—		
	9. INSPECTION OF COMPOSITE AFTER CONCRETE PLACEMENT:					AISC 341, TABLE J9-3	
Y	a. ACHIEVEMENT OF MINIMUM SPECIFIED CONCRETE COMPRESSIVE STRENGTH AT SPECIFIED AGE.	—	D	—	D		
	10. INSPECTION OF H. PILES:					AISC 341, TABLE J10-1	
Y	a. PROTECTED ZONE - NO HOLES AND UNAPPROVED ATTACHMENTS MADE BY THE RESPONSIBLE CONTRACTOR, AS APPLICABLE.	P	D	P	D		
O: ITEMS NEED TO BE OBSERVED ON A RANDOM DAILY BASIS. OPERATIONS NEED NOT BE DELAYED PENDING THESE INSPECTIONS.							
P: ITEMS NEED TO BE PERFORMED PRIOR TO THE FINAL ACCEPTANCE OF THE ITEM.							
D: THE INSPECTOR SHALL PREPARE REPORTS INDICATING THAT THE WORK WAS PERFORMED IN ACCORDANCE WITH THE CONTRACT DOCUMENTS PER ASIC 341 J5-3.							
P/O: THE ITEMS NEED TO BE PERFORMED OR OBSERVED PER AISC 341, TABLE J6-1.							

No.	DESCRIPTION	DATE	BY
7			
6			
5			
4			
3			
2	BID SET	5/22/20	RKS
1			

REVISIONS (OR CHANGE NOTICES)

Rio Rancho City of Vision

Designed By: AECOM Imagine it. Delivered. 6501 Americas Pkwy NE, Suite 900, Albuquerque, New Mexico 87110 (505)-855-7500

Designed For: CITY OF RIO RANCHO

WASTEWATER TREATMENT PLANT 2 SOLIDS HANDLING IMPROVEMENTS

SPECIAL INSPECTION TABLES

ROBERT E. HAWTHORNE NEW MEXICO 8178 REGISTERED PROFESSIONAL ENGINEER 5-22-2020

PROJECT NO.	WW2030
DESIGNED BY:	RKS, REH
DRAWN BY:	CAM
CHECKED BY:	RKS, REH
DATE MODIFIED:	5-22-2020
DPW CHK:	

SHEET: S-3

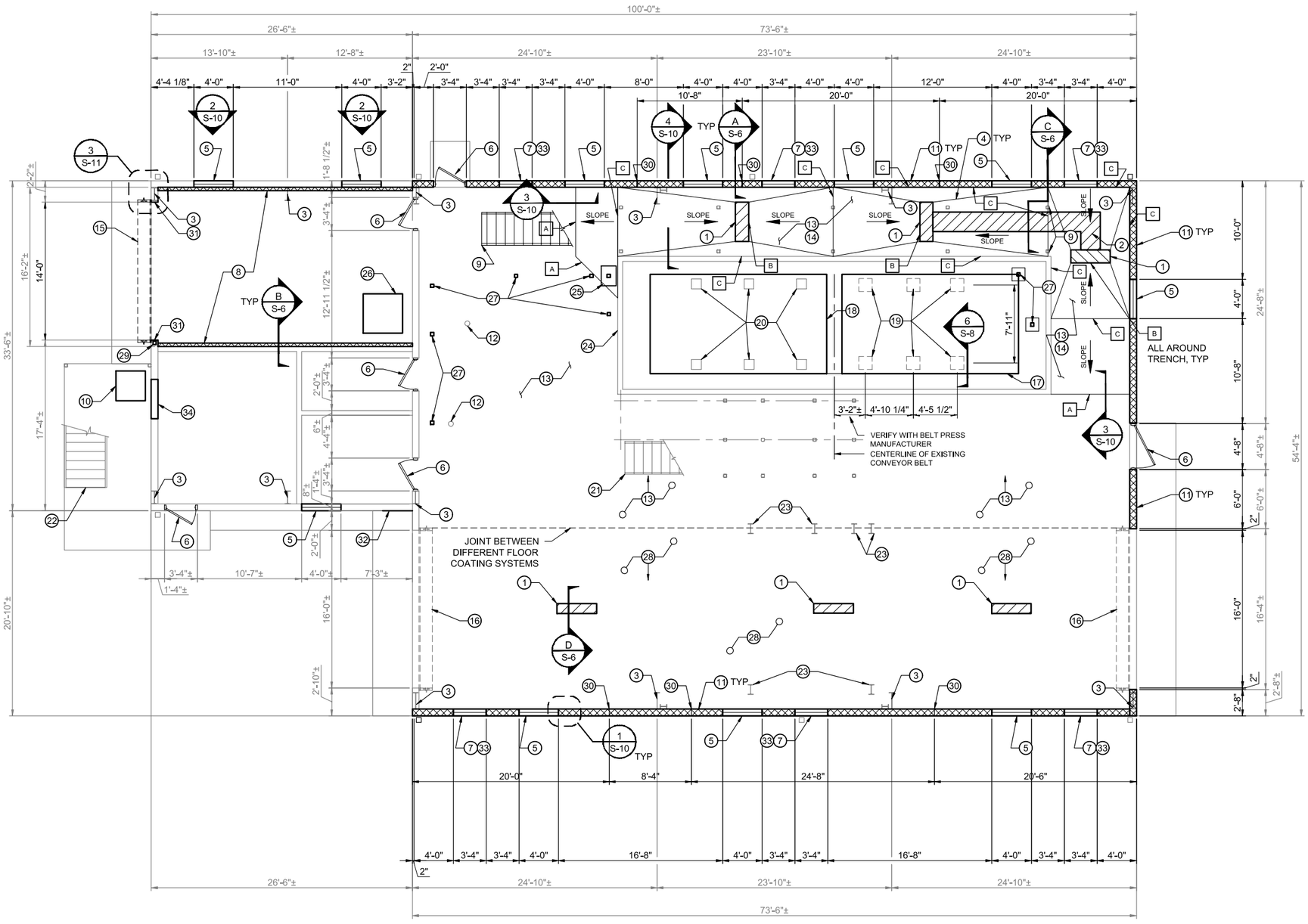

GENERAL NOTES:

1. DIMENSIONS ARE BASED ON OWNERS SUPPLIED RECORD DRAWINGS AND MAY VARY FROM ACTUAL CONDITIONS. CONTRACTOR SHALL FIELD VERIFY ALL DIMENSIONS AND ELEVATIONS.
2. REFERENCE ELEVATION: 5150.01 = EXISTING FINISHED FLOOR (0'-0").

KEYED NOTES

1. SAWCUT AND REMOVE CONCRETE FOR NEW TRENCH DRAIN, SEE PLUMBING.
2. SAWCUT AND REMOVE CONCRETE FOR DRAINLINE TO NEW TRENCH, SEE PLUMBING.
3. EXISTING METAL BUILDING FRAME TO REMAIN.
4. LINE OF FLOOR SLOPE.
5. WINDOW, SEE ARCH.
6. DOOR, SEE ARCH.
7. LOUVER, SEE HVAC.
8. NEW GALVANIZED 4" 16 GA. STUD BEARING WALL WITH STUDS @ 2'-0" O.C. MAX. AND DOUBLE STUDS AT EACH DECK BEAM.
9. METAL PLATFORM, STAIRS, AND SUPPORT SYSTEM, SEE SHEETS S-7 AND S-8.
10. HVAC SYSTEM, SEE HVAC.
11. 8" CMU WALL TO 7'-4" ABOVE FINISHED FLOOR OF EXISTING DEWATERING FACILITY. 2" EIFS ON EXTERIOR FACE OF CMU NOT SHOWN, SEE ARCH.
12. EXISTING FLOOR DRAIN TO REMAIN.
13. NEW FLOOR COATING. SIKAGARD 62, SEE 3/S-10 FOR ADDITIONAL INFORMATION.
14. NEW GROUT, SIKATOP 122 PLUS, SEE 3/S-10 FOR ADDITIONAL INFORMATION. SLOPE TO NEW FLOOR DRAINS.
15. CHAIN DRIVEN 14'-0" x 8'-6" METAL ROLL-UP DOOR, SEE ARCH.
16. EXISTING METAL ROLL-UP DOOR TO REMAIN.
17. NEW BELT PRESS, SEE MECHANICAL.
18. EXISTING BELT PRESS TO REMAIN.
19. NEW CONCRETE PEDESTAL FOR NEW BELT PRESS.
20. EXISTING CONCRETE PEDESTAL TO REMAIN.
21. EXISTING PLATFORM.
22. EXISTING STAIR.
23. EXISTING CONVEYOR, CHUTE, AND FRAMING.
24. EXISTING CONCRETE CURB.
25. STEEL STAND FOR MECHANICAL EQUIPMENT.
26. NEW HOUSEKEEPING PAD FOR MECHANICAL EQUIPMENT, SEE DETAIL 5/S-10.
27. NEW PIPE SUPPORT. SUPPORTS AT NORTH EAST WALL SHALL BE COORDINATED WITH NEW PANEL LOCATION
28. SIKADUR 22 LO-MOD SEEDED TO REFUSAL WITH #3 FLINT OR ARMORSTONE INSTALL FLOOR COATING PER MFR RECOMMENDATIONS.
29. EXISTING WIND COLUMN OR NEW HSS 4x4x¼ COLUMN IN WALL. IF NEW HSS, ANCHOR TO CONCRETE AS SHOWN IN C/S-9.
30. MASONRY CONTROL JOINT (MCJ), SEE DETAIL 2/S-11.
31. C10x15.3 DOOR JAMB, VERIFY CHANNEL DEPTH WITH WALL THICKNESS. PROVIDE ⅜" BASE PL WITH (2) ⅜" DIAMETER DRILL AND EPOXY ANCHORS TO CONCRETE.
32. INSTALL NEW/REUSED PANEL AND FASTEN TO MATCH EXISTING. REPLACE BASE ANGLE TO MATCH EXISTING.
33. PROVIDE CMU LINTEL. SEE DETAIL 1/S-11.
34. NEW STUD WALL FRAMING AND INSULATION WITH NEW SALVAGED EXTERIOR METAL WALL PANEL.

TOP OF GROUT FLOOR ELEV.

A. 0" AFF
B. ½" AFF
C. 2" AFF

FIRST FLOOR PLAN
Scale 3/16"=1'-0"

0 4' 8'

No.	DESCRIPTION	DATE	BY
1	BID SET	5/22/20	RKS
2			
3			
4			
5			
6			
7			

REVISIONS (OR CHANGE NOTICES)

Designed By: AECOM Imagine it. Delivered. One Park Square, 6501 Americas Pkwy NE, Suite 900, Albuquerque, New Mexico 87110 (505)-855-7500

Designed For: CITY OF RIO RANCHO

WASTEWATER TREATMENT PLANT 2 SOLIDS HANDLING IMPROVEMENTS

DEWATERING FACILITY FIRST FLOOR PLAN

ROBERT E. HAWTHORNE NEW MEXICO No. 8178 5-22-2020 REGISTERED PROFESSIONAL ENGINEER

PROJECT NO.	WW2030
DESIGNED BY:	RKS, REH
DRAWN BY:	CAM
CHECKED BY:	RKS, REH
DATE MODIFIED:	5-22-2020
DPW CHK:	

SHEET: S-4

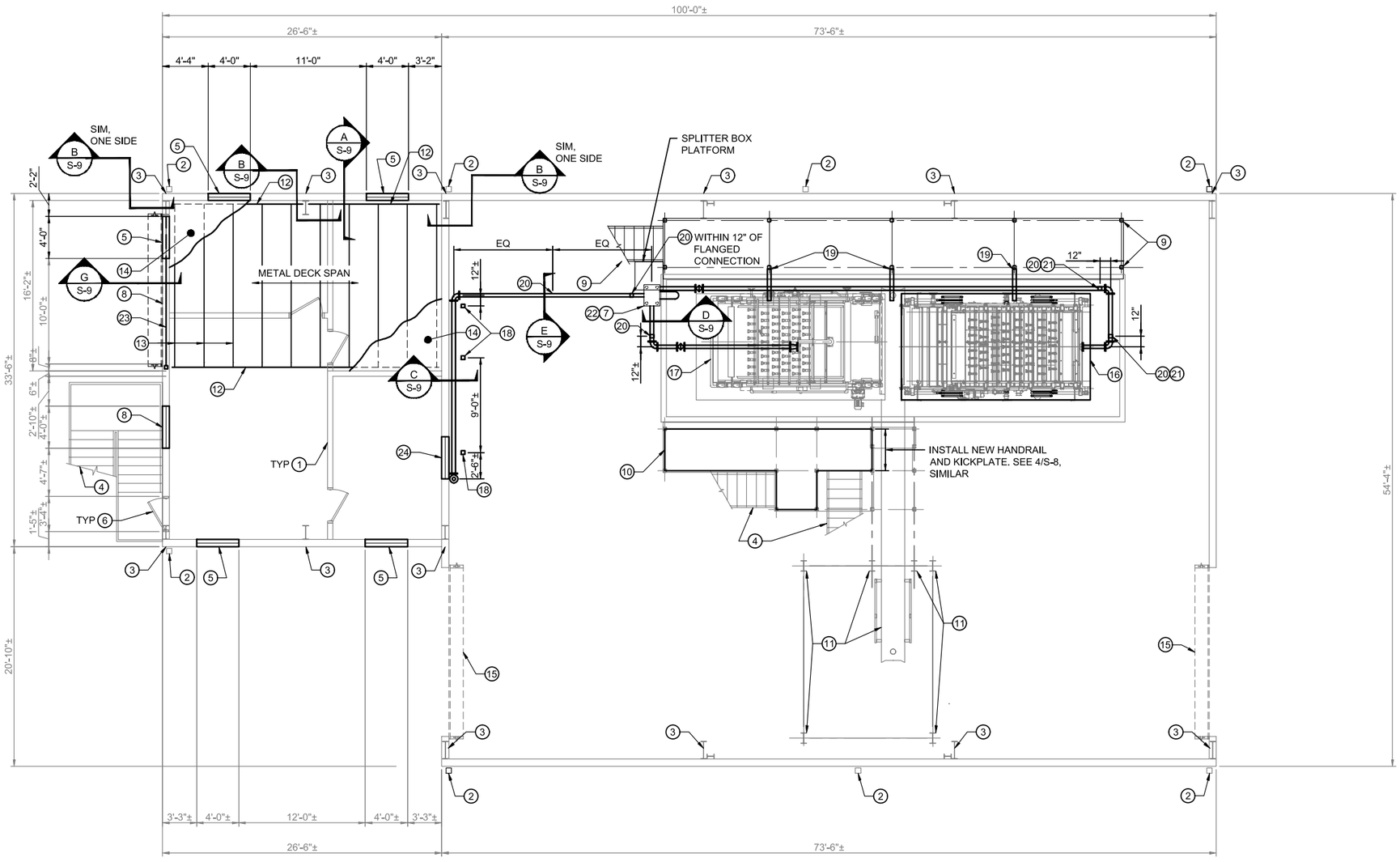

GENERAL NOTES:

1. DIMENSIONS SHOWN MAY VARY FROM ACTUAL CONDITIONS. CONTRACTOR SHALL FIELD VERIFY ALL DIMENSIONS AND ELEVATIONS.

KEYED NOTES

1. OFFICE WALLS AND DOORS, SEE ARCH.
2. DOWNSPOUT.
3. EXISTING METAL BUILDING FRAME TO REMAIN.
4. EXISTING STAIR.
5. NEW WINDOW.
6. DOOR, SEE ARCH.
7. STEEL STAND TO SUPPORT MECHANICAL EQUIPMENT.
8. NEW STUD WALL FRAMING AND INSULATION WITH NEW SALVAGED EXTERIOR METAL WALL PANEL.
9. METAL PLATFORM, STAIRS, AND SUPPORT SYSTEM, SEE S-7 AND S-8.
10. EXISTING PLATFORM.
11. EXISTING CONVEYOR, CHUTE, AND FRAMING.
12. W6x12 BEAM ON TOP OF 4" BEARING STUD WALL BELOW.
13. TEN W6x12 BEAMS SUPPORTING DECK, ONE EACH END, EQUAL SPACED, 3'-3" O.C. MAX..
14. GALVANIZED 0.6 C 22 GA METAL DECK WITH 1½" CONCRETE SLAB (TOTAL DEPTH OF SLAB AND DECK = 2") REINFORCED WITH 6x6-W2.9xW2.9 WELDED WIRE MESH. USE ⅜" MAX AGGREGATE SIZE IN DECK CONCRETE. WELD DECK TO SUPPORTS WITH ⅝" PUDDLE WELDS, 30/4 PATTERN. FASTEN SIDELAPS WITH #10 TEK SCREWS AT 12" O.C. DECK SHALL BE 2 SPAN MINIMUM.
15. EXISTING METAL ROLL-UP DOOR TO REMAIN.
16. NEW BELT PRESS, SEE MECHANICAL.
17. EXISTING BELT PRESS TO REMAIN.
18. ALIGN PIPE SUPPORT W/ WALL STUD, SEE C/S-5.
19. PIPE SUPPORT, SEE A/S-7.
20. PIPE SUPPORT, SEE E/S-9.
21. PIPE SUPPORT, SEE E AND F ON S-9.
22. PIPE SUPPORT, SEE D/S-9.
23. W6x12 BEAM, FASTEN EACH END TO PEMB FRAMING OR NEW HSS SIMILAR TO B/S-9.
24. NEW WALL IN-FILL. US 6" 20 GA STUD AT 16" O.C. MAX.

SECOND FLOOR PLAN
Scale 3/16"=1'-0"

0 4' 8'

No.	DESCRIPTION	DATE	BY
1	BID SET	5/22/20	RKS
2			
3			
4			
5			
6			
7			

REVISIONS (OR CHANGE NOTICES)

Designed By: AECOM Imagine it. Delivered.
One Park Square
6501 America Pkwy NE, Suite 900
Albuquerque, New Mexico 87110
(505)-855-7500

Designed For:
CITY OF RIO RANCHO

WASTEWATER TREATMENT
PLANT 2 SOLIDS HANDLING
IMPROVEMENTS

DEWATERING FACILITY
SECOND FLOOR PLAN

ROBERT E. HAWTHORNE
NEW MEXICO
No. 8178
5-22-2020
REGISTERED PROFESSIONAL ENGINEER

PROJECT NO.	WW2030
DESIGNED BY:	RKS, REH
DRAWN BY:	CAM
CHECKED BY:	RKS, REH
DATE MODIFIED:	5-22-2020
DPW CHK:	

SHEET: S-5

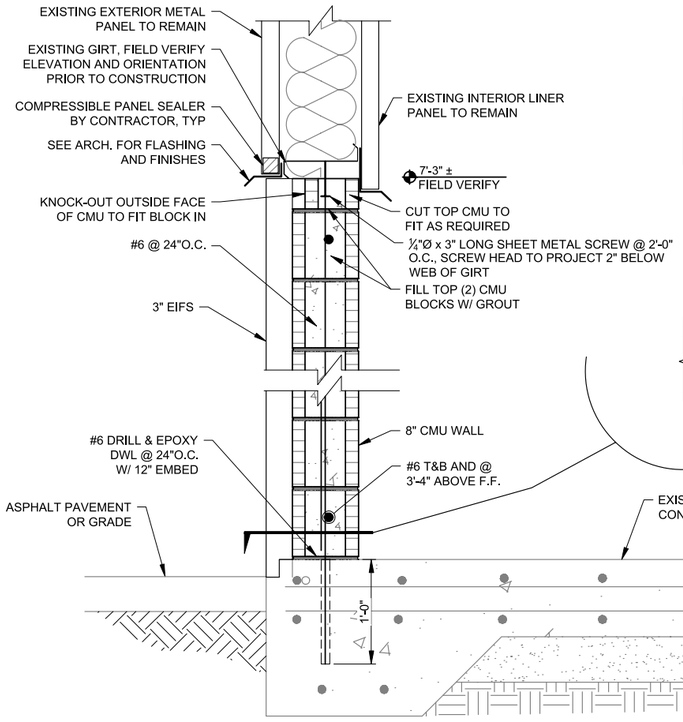

A | SECTION
S-4 | Scale 1 1/2"=1'-0"

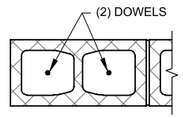

WALL END

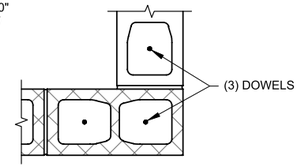

WALL CORNER

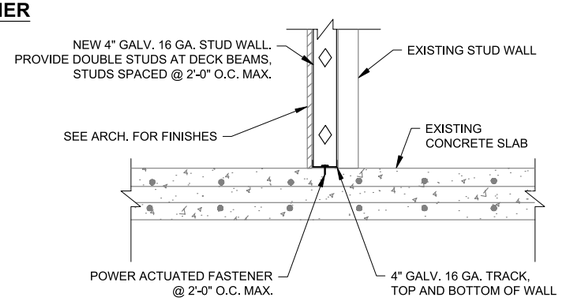

B | SECTION
S-4 | Scale 1"=1'-0"

BAR SIZE	DIAMETER (d_b) (INCHES)	DEVELOPMENT LENGTH (l_d) (INCHES)		CLASS B LAP SPLICE (INCHES)		90° STD HOOK (INCHES)		180° STD HOOK "Y"
		"TOP" BARS	OTHER	"TOP" BARS	OTHER	HOOK	l_{dh}	
		REINFORCING BARS IN TENSION						
#3	0.375	18	14	24	18	6	7	6
#4	0.5	25	19	32	25	8	10	6
#5	0.625	31	24	40	31	10	12	6
#6	0.75	37	28	48	37	12	14	6
#7	0.875	54	42	70	54	14	17	7
#8	1.0	62	47	80	62	16	19	8
#9	1.125	70	54	90	70	19	21	11
#10	1.25	78	60	102	78	22	24	12
#11	1.375	87	67	113	87	24	27	13
#14	1.75	104	80	136	104	30	32	14
REINFORCING BARS IN COMPRESSION								
#3	0.375	8		12		HOOKED BARS SHALL NOT BE USED IN COMPRESSION		
#4	0.5	9		15				
#5	0.625	12		19				
#6	0.75	14		23				
#7	0.875	17		26				
#8	1.0	19		30				
#9	1.125	21		34				
#10	1.25	24		38				
#11	1.375	27		42				
#14	1.75	32		51				

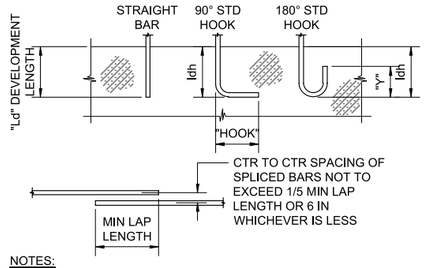

NOTES:

1. "TOP" BARS SHALL BE HORIZONTAL REINFORCEMENT PLACED SO THAT MORE THAN 12" OF FRESH CONCRETE IS CAST IN THE MEMBER BELOW THE DEVELOPMENT LENGTH OR SPLICE.
2. CLEAR SPACING OF BARS BEING DEVELOPED OR SPLICED SHALL
   A. NOT BE LESS THAN d_b, HAVE CLEAR COVER NOT LESS THAN d_b, AND STIRRUPS OR TIES THROUGHOUT L_d NOT LESS THAN THE CODE MINIMUM OR;
   B. CLEAR SPACING OF BARS BEING DEVELOPED OR SPLICED NOT LESS THAN $2d_b$ AND CLEAR COVER NOT LESS THAN d_b. WHERE d_b=DIAMETER OF REINFORCING BAR AND L_d= DEVELOPMENT LENGTH.
3. ALL LAP SPLICES SHALL BE CLASS B UNLESS NOTED OTHERWISE.
4. WHEN SPLICING BAR OF DIFFERENT SIZE, THE LENGTH OF LAP SHALL BE GOVERNED BY THE LARGER DIAMETER BAR.
5. SPLICES ARE TO BE MADE SO THAT THE GIVEN DISTANCES TO FACE OF CONCRETE WILL BE MAINTAINED.
6. SPLICES SHALL BE STAGGERED TO GIVE 12 INCHES CLEAR BETWEEN ENDS OF ADJACENT SPLICES, IF BARS ARE SPACED CLOSER THAN 6 INCHES OR 6 BAR DIAMETERS.

1 | STD HOOK & REINF LAP SPLICE
Scale: N.T.S.

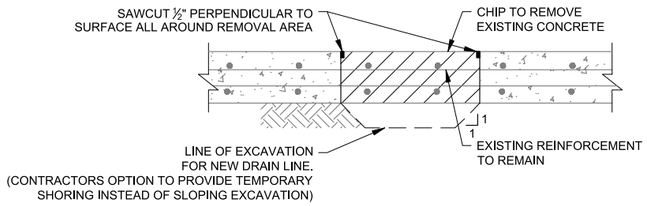

REMOVAL

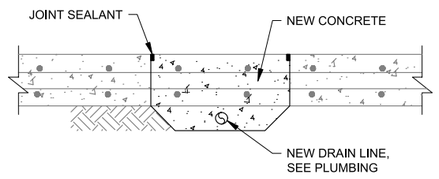

REPLACEMENT

C | SECTION
S-4 | Scale 1"=1'-0"

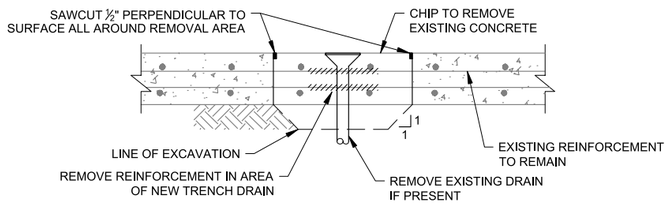

REMOVAL

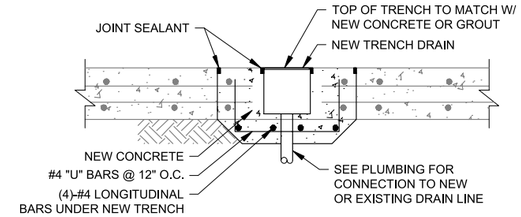

REPLACEMENT

D | SECTION
S-4 | Scale 1"=1'-0"

No.	DESCRIPTION	DATE	BY
1	BID SET	5/22/20	RKS
2			
3			
4			
5			
6			
7			

REVISIONS (OR CHANGE NOTICES)

Designed By: AECOM Imagine it. Delivered. One Park Square, 6501 Americas Pkwy NE, Suite 900, Albuquerque, New Mexico 87110, (505)-855-7500

Designed For: CITY OF RIO RANCHO

WASTEWATER TREATMENT PLANT 2 SOLIDS HANDLING IMPROVEMENTS

FOUNDATION SECTIONS

ROBERT E. HAWTHORNE, NEW MEXICO, No. 8178, 5-22-2020, REGISTERED PROFESSIONAL ENGINEER

PROJECT NO.	WW2030
DESIGNED BY:	RKS, REH
DRAWN BY:	CAM
CHECKED BY:	RKS, REH
DATE MODIFIED:	5-22-2020
DPW CHK:	

SHEET: S-6

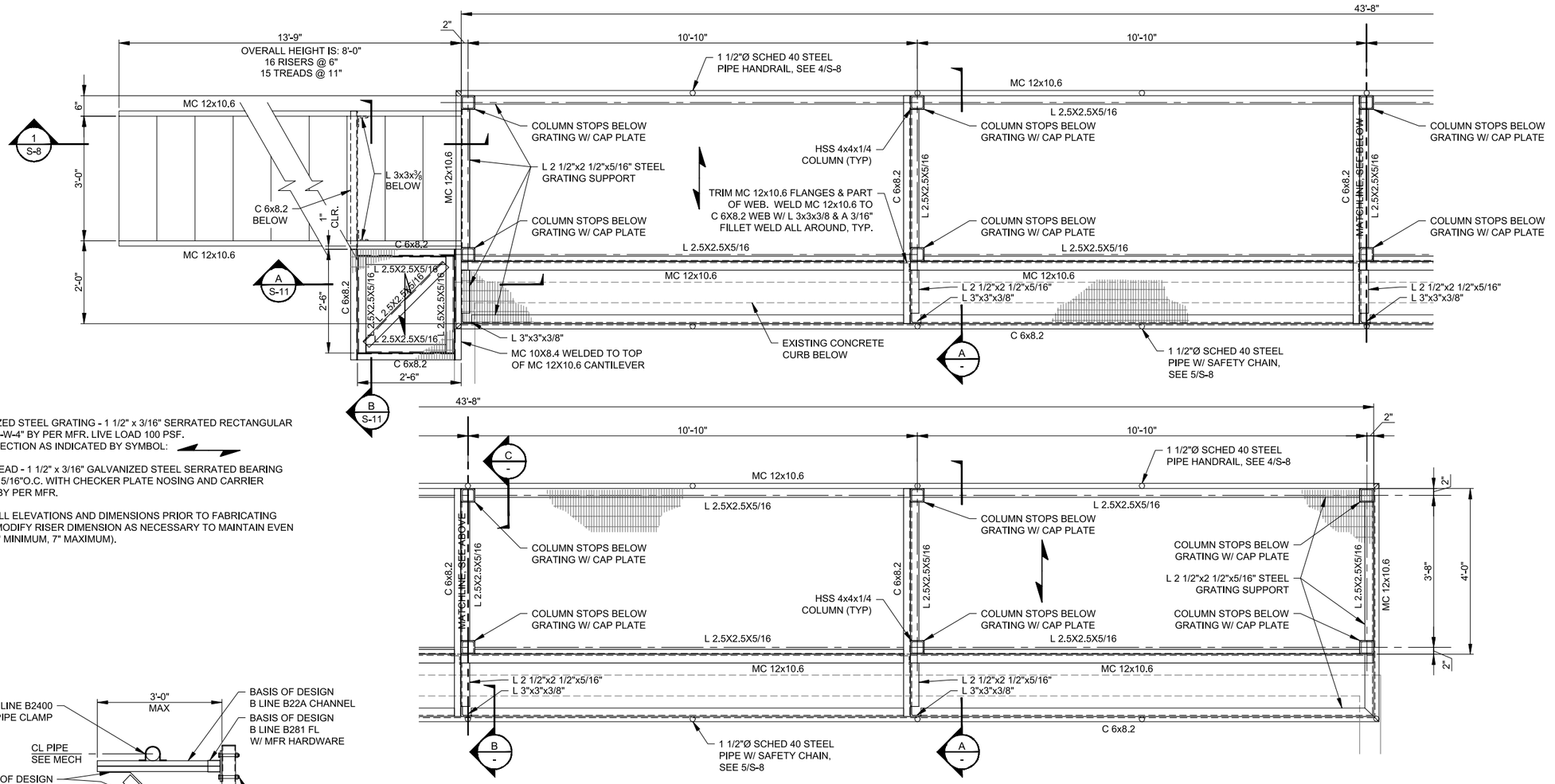

NOTES:
1. GALVANIZED STEEL GRATING - 1 1/2" x 3/16" SERRATED RECTANGULAR BARS, "19-W-4" BY PER MFR. LIVE LOAD 100 PSF.
2. SPAN DIRECTION AS INDICATED BY SYMBOL:
3. STAIR TREAD - 1 1/2" x 3/16" GALVANIZED STEEL SERRATED BEARING BARS @ 15/16"O.C. WITH CHECKER PLATE NOSING AND CARRIER ANGLES BY PER MFR.
4. VERIFY ALL ELEVATIONS AND DIMENSIONS PRIOR TO FABRICATING STAIRS. MODIFY RISER DIMENSION AS NECESSARY TO MAINTAIN EVEN STEPS (4" MINIMUM, 7" MAXIMUM).

1 | BELT PRESS PLATFORM FRAMING PLAN
Scale 3/4"=1'-0"

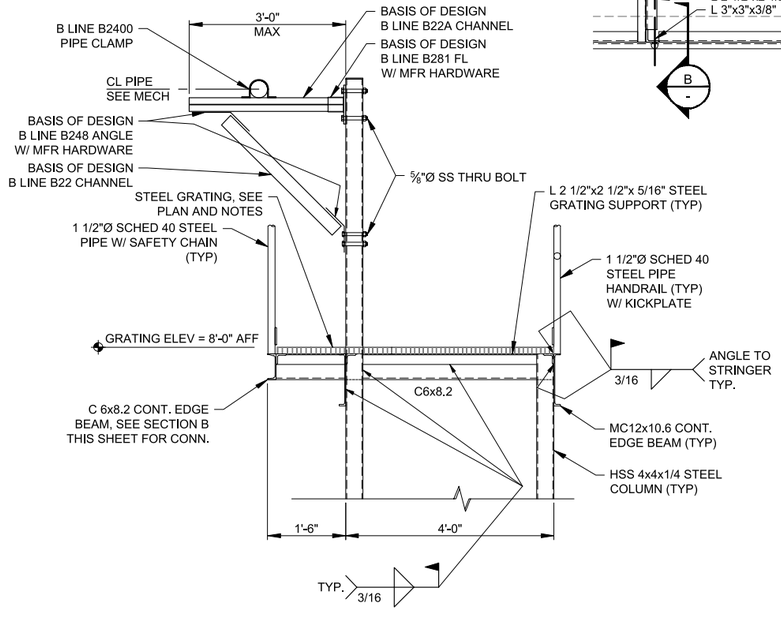

A | PLATFORM SECTION
Scale 3/4"=1'-0"

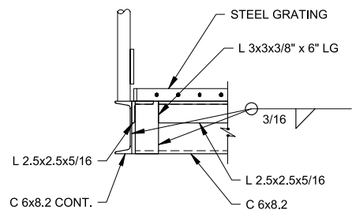

B | PLATFORM SECTION
Scale 1 1/2"=1'-0"

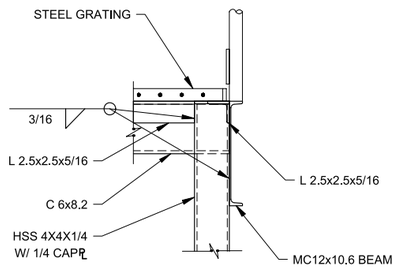

C | PLATFORM SECTION
Scale 1 1/2"=1'-0"

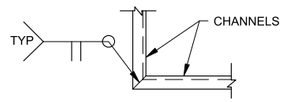

NOTE: OTHER FRAMING NOT SHOWN FOR CLARITY

D | PLATFORM SECTION
Scale 1 1/2"=1'-0"

No.	DESCRIPTION	DATE	BY
1	BID SET	5/22/20	RKS
2			
3			
4			
5			
6			
7			

REVISIONS (OR CHANGE NOTICES)

Designed By: AECOM Imagine it. Delivered. One Park Square, 6501 Americas Pkwy NE, Suite 900, Albuquerque, New Mexico 87110 (505)-855-7500

Designed For: CITY OF RIO RANCHO

WASTEWATER TREATMENT PLANT 2 SOLIDS HANDLING IMPROVEMENTS

PLATFORM FRAMING PLAN AND SECTIONS

ROBERT E. HAWTHORNE, NEW MEXICO, 8178, 5-22-2020, REGISTERED PROFESSIONAL ENGINEER

PROJECT NO.	WW2030
DESIGNED BY:	RKS, REH
DRAWN BY:	CAM
CHECKED BY:	RKS, REH
DATE MODIFIED:	5-22-2020
DPW CHK:	

SHEET: S-7

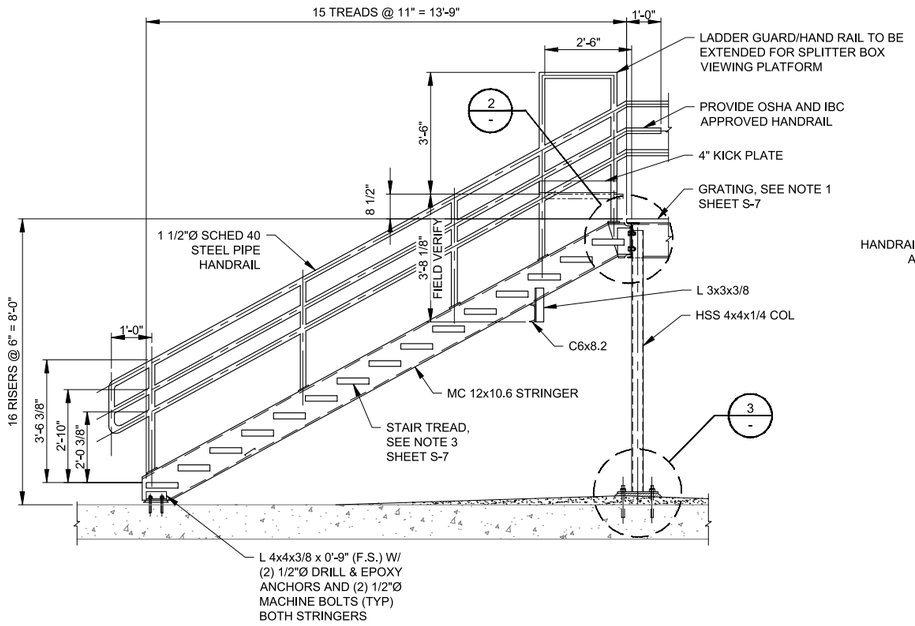

1 | STAIR STRINGER
S-7 | Scale 1/2"=1'-0"

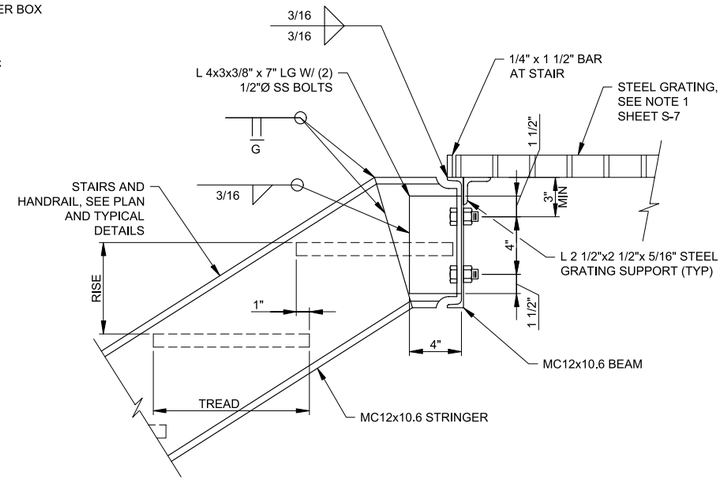

2 | STAIR TOP CONNECTION
- | Scale 1 1/2"=1'-0"

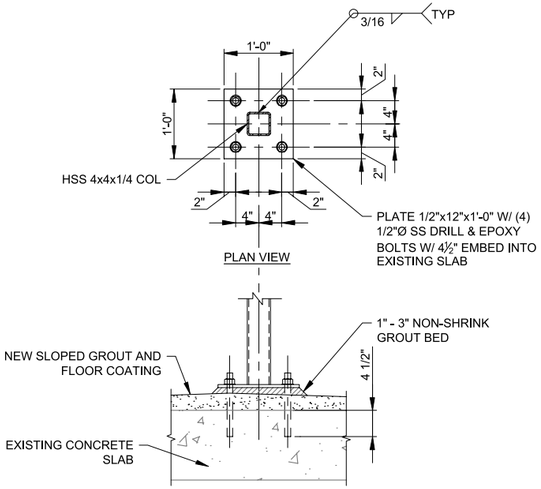

3 | COLUMN BASE PLATE
- | Scale 1"=1'-0"

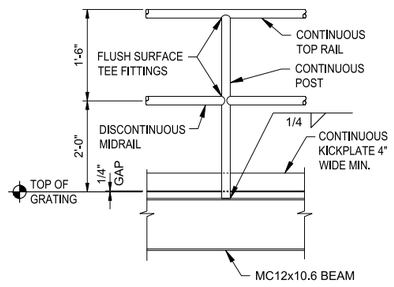

ELEVATION

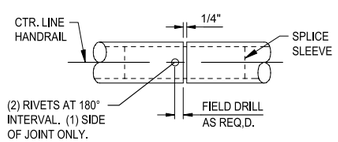

RAIL SPLICE DETAIL

HANDRAIL NOTES

1. ALL HANDRAIL, KICKPLATES, AND ACCESSORIES SHALL BE STEEL, PER SPECIFICATIONS.
2. ALL RAILS AND POSTS MUST BE SIZED AND SPACED TO SATISFY ALL APPLICABLE CODES AND STANDARDS.

4 | TYPICAL HANDRAIL
S-5 | Scale NTS

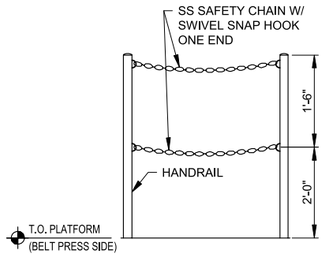

5 | PLATFORM POST WITH CHAIN
- | Scale 3/4"=1'-0"

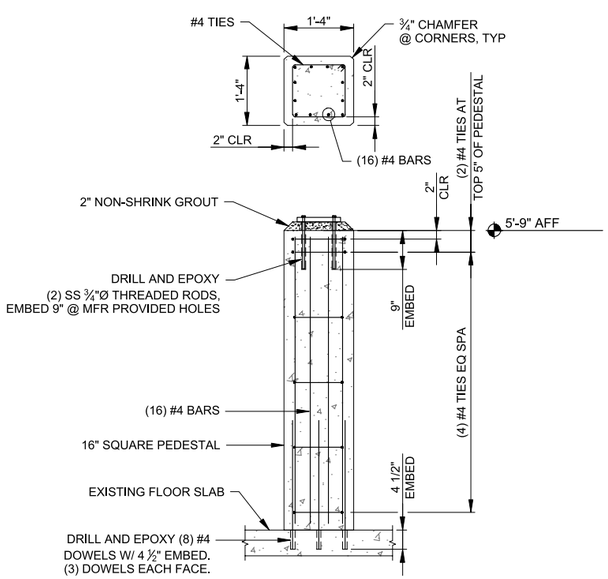

6 | SECTION
S-4 | Scale 1 1/2"=1'-0"

No.	DESCRIPTION	DATE	BY
1	BID SET	5/22/20	RKS
2			
3			
4			
5			
6			
7			

REVISIONS (OR CHANGE NOTICES)

Designed By: AECOM Imagine it. Delivered.
One Park Square
6501 Americas Pkwy NE, Suite 900
Albuquerque, New Mexico 87110
(505)-855-7500

Designed For: CITY OF RIO RANCHO

WASTEWATER TREATMENT PLANT 2 SOLIDS HANDLING IMPROVEMENTS

PLATFORM SECTIONS AND DETAILS

ROBERT E. HAWTHORNE NEW MEXICO No. 8178 5-22-2020 REGISTERED PROFESSIONAL ENGINEER

PROJECT NO.	WW2030
DESIGNED BY:	RKS, REH
DRAWN BY:	CAM
CHECKED BY:	RKS, REH
DATE MODIFIED:	5-22-2020
DPW CHK:	

SHEET: S-8

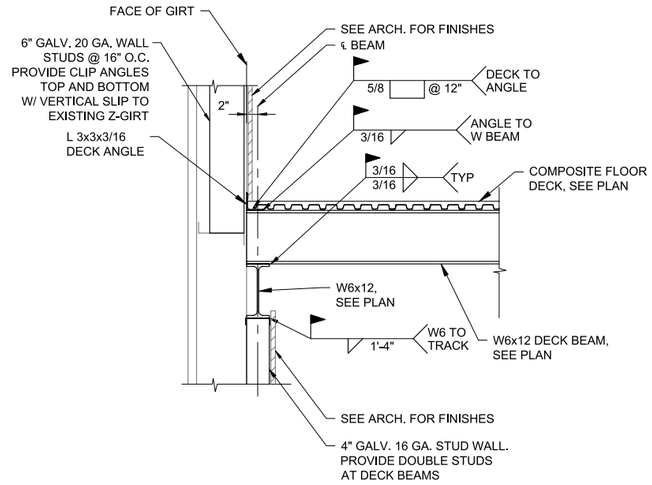

A | SECTION
S-5 | Scale 1"=1'-0"

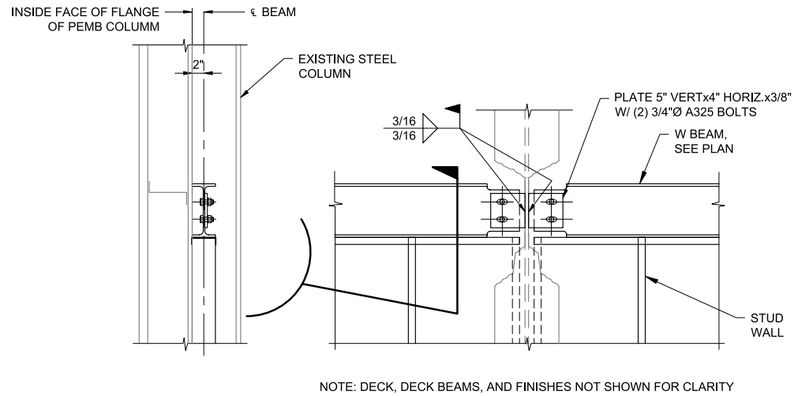

NOTE: DECK, DECK BEAMS, AND FINISHES NOT SHOWN FOR CLARITY

B | SECTION
S-5 | Scale 1"=1'-0"

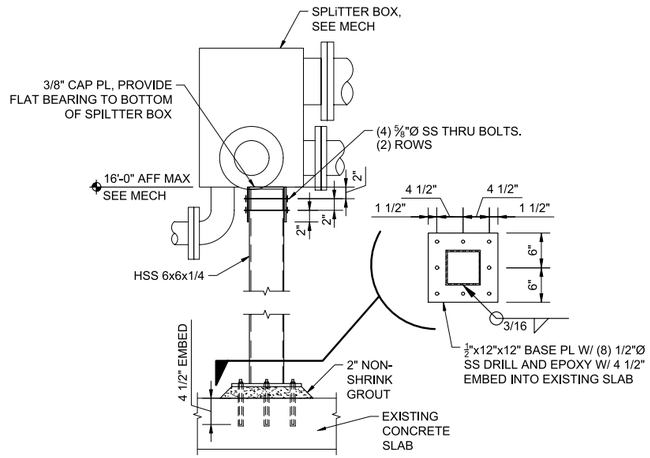

D | SECTION
S-5 | Scale 1"=1'-0"

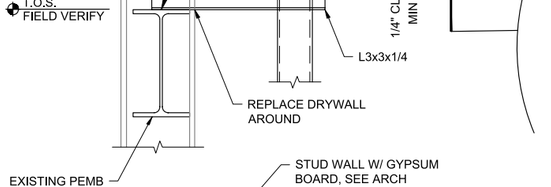

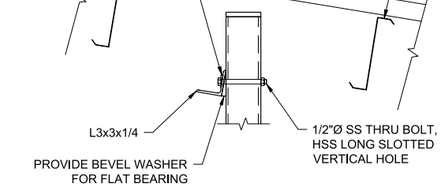

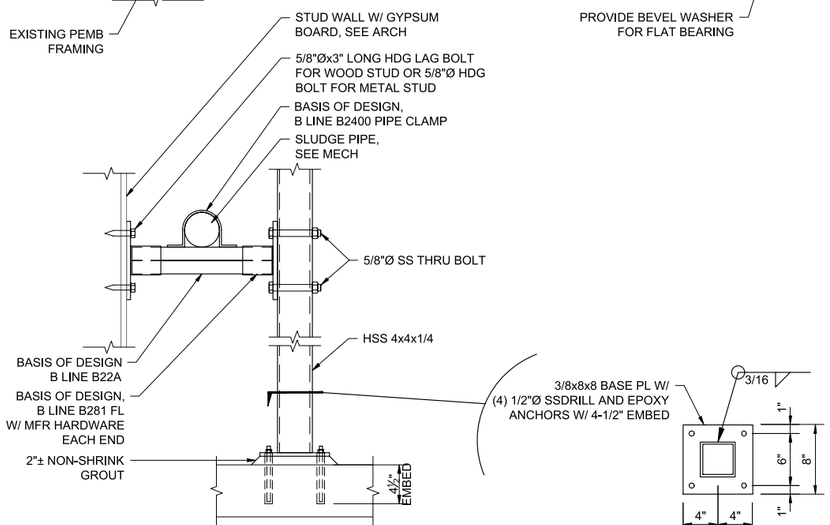

C | SECTION
S-5 | Scale 1 1/2"=1'-0"

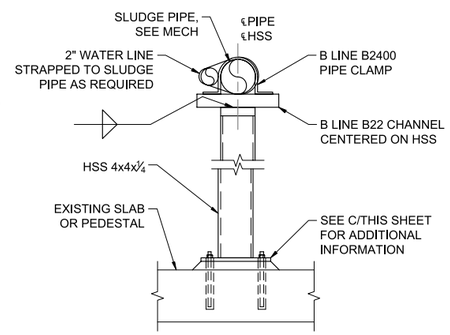

E | SECTION
S-5 | Scale 1 1/2"=1'-0"

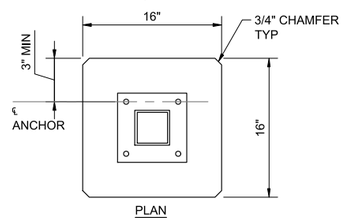

PLAN

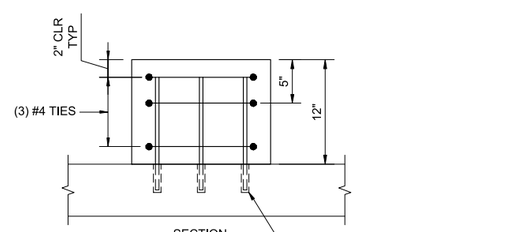

SECTION

F | DETAIL
S-5 | Scale 1 1/2"=1'-0"

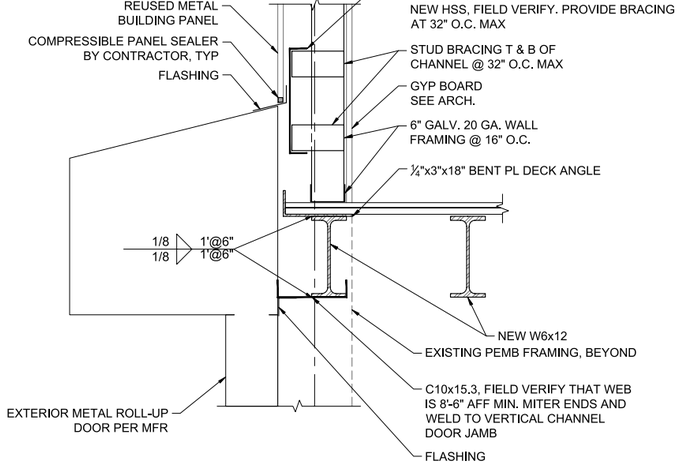

G | SECTION
S-5 | Scale 1 1/2"=1'-0"

No.	DESCRIPTION	DATE	BY
1	BID SET	5/22/20	RKS
2			
3			
4			
5			
6			
7			

REVISIONS (OR CHANGE NOTICES)

Designed By: AECOM Imagine it. Delivered. One Park Square, 6501 Americas Pkwy NE, Suite 900, Albuquerque, New Mexico 87110, (505)-855-7500

Designed For: CITY OF RIO RANCHO

WASTEWATER TREATMENT PLANT 2 SOLIDS HANDLING IMPROVEMENTS

FRAMING SECTIONS

ROBERT E. HAWTHORNE, NEW MEXICO, 8178, 5-22-2020, REGISTERED PROFESSIONAL ENGINEER

PROJECT NO.	WW2030
DESIGNED BY:	RKS, REH
DRAWN BY:	CAM
CHECKED BY:	RKS, REH
DATE MODIFIED:	5-22-2020
DPW CHK:	

SHEET: S-9

DWG: L:\60610718_Rio Rancho - Solids Dewatering Design\WW-CAD-CIS\WW-CAD\01-SHEETS\S-9.dwg USER: jesse.higgins
DATE: May 22, 2020 1:14pm XREFS: W:\Engineering\Standard Details\Standard Details 2020\S-1.dwg

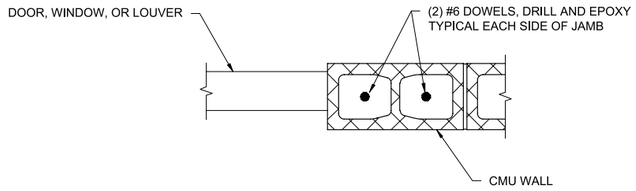

1 | JAMB DETAIL
S-4 | Scale 1 1/2"=1'-0"

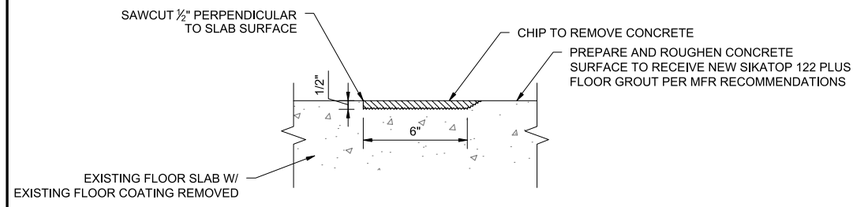

REMOVAL

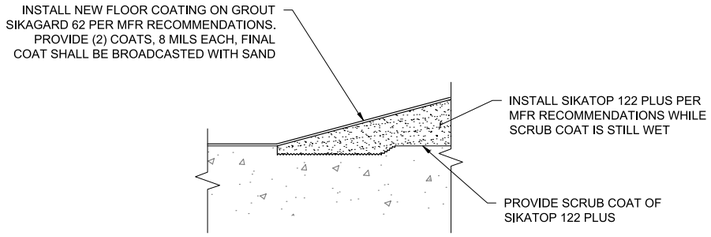

REPLACEMENT

3 | FLOOR COATING DETAIL
S-4 | Scale 3"=1'-0"

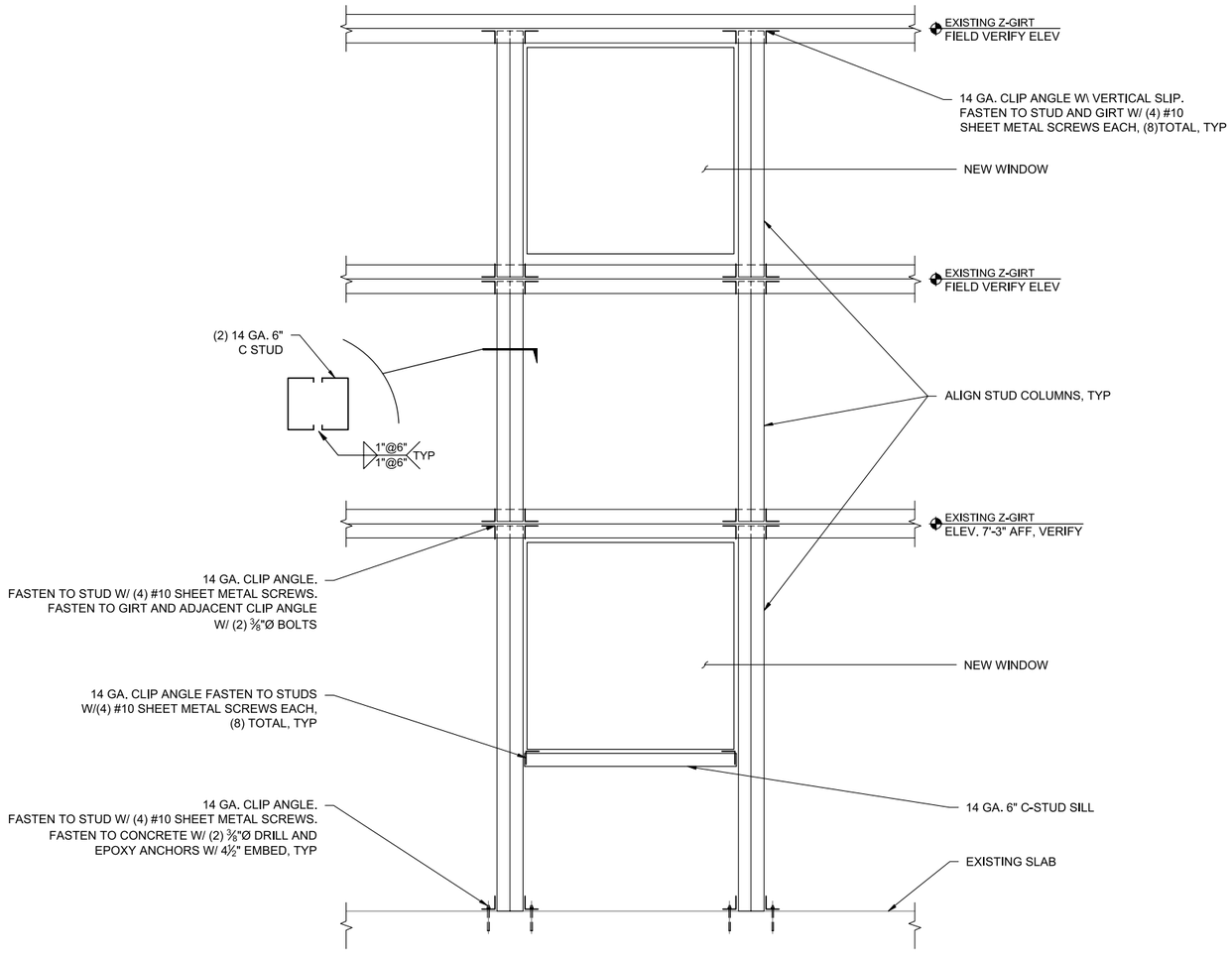

2 | WINDOW FRAMING DETAIL
S-4, S-5 | Scale 3/4"=1'-0"

*NOTE: WALL NOT SHOWN FOR CLARITY

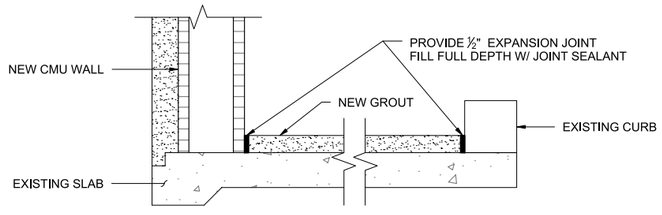

4 | EXPANSION JOINT DETAIL
S-4 | Scale 1 1/2"=1'-0"

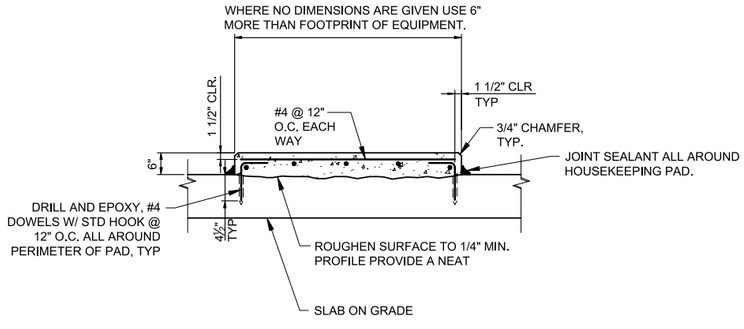

5 | HOUSEKEEPING PAD DETAIL
S-4 | Scale 3/4"=1'-0"

No.	DESCRIPTION	DATE	BY
1	BID SET	5/22/20	RKS
2			
3			
4			
5			
6			
7			

REVISIONS (OR CHANGE NOTICES)

Designed By: AECOM Imagine it. Delivered. One Park Square, 6501 Americas Pkwy NE, Suite 900, Albuquerque, New Mexico 87110, (505)-855-7500

Designed For: CITY OF RIO RANCHO

WASTEWATER TREATMENT PLANT 2 SOLIDS HANDLING IMPROVEMENTS

WALL FRAMING DETAILS

ROBERT E. HAWTHORNE, NEW MEXICO, 8178, 5-22-2020, REGISTERED PROFESSIONAL ENGINEER

PROJECT NO.	WW2030
DESIGNED BY:	RKS, REH
DRAWN BY:	CAM
CHECKED BY:	RKS, REH
DATE MODIFIED:	5-22-2020
DPW CHK:	

SHEET: S-10

LINTEL SCHEDULE

MARK	WALL SIZE	TYPE	LINTEL DEPTH 'd'	MAXIMUM SPAN	REINFORCING	REMARKS
L-1	8"	A	16"	6'-0"	(2) #5	

NOTES:

1. SEE FOUNDATION PLAN, ELEVATIONS & DOOR/WINDOW SCHEDULES FOR LOCATION AND SIZE OF OPENINGS.
2. PR0VIDE 1" OF BEARING AT EACH END FOR EACH FOOT OF CLEAR SPAN (8" MINIMUM).
3. REINFORCING SHALL PROJECT A MINIMUM OF 25" BEYOND OPENING. IF OPENING IS LESS THAN 25" FROM CENTER THEN PROVIDE MIN 24" HOOK AT END OF LINTEL.

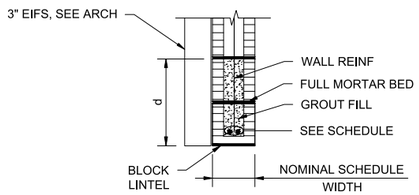

TYPE A

1 | LINTEL SCHEDULE
S-4 | NTS

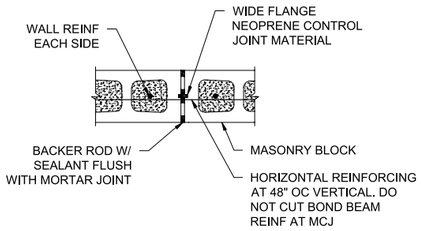

MASONRY CONTROL JOINT (MCJ) SPACING UNLESS NOTED OTHERWISE

WALL HEIGHT	MAX JOINT SPACING
GREATER THAN OR EQUAL TO 8'-4"	25'-0"
LESS THAN 8'-4"	3 TIMES WALL HEIGHT

2 | MASONRY CONTROL JOINT
S-4 | NTS

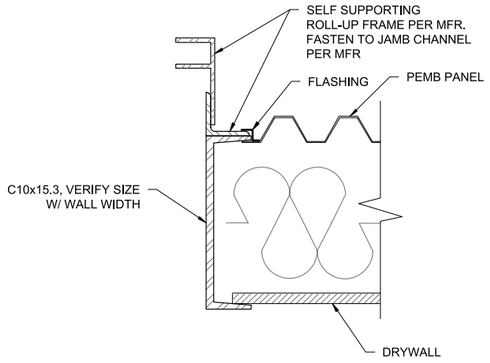

3 | ROLL-UP DOOR JAMB DETAIL
S-4 | SCALE 3" = 1'-0"

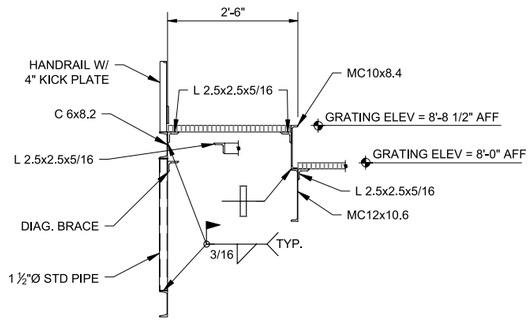

A | SECTION
S-7 | SCALE 3/4" = 1'-0"

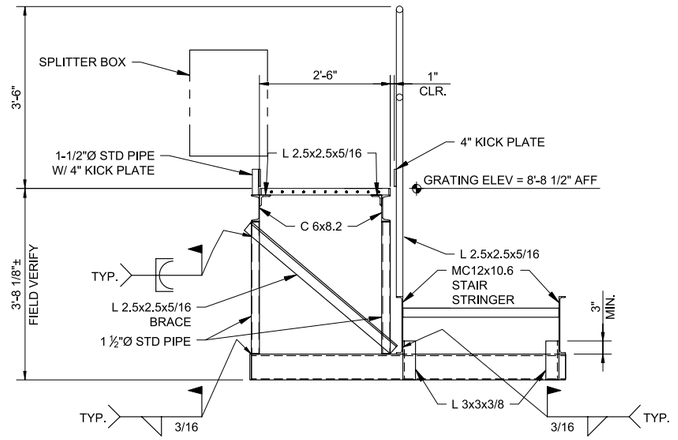

B | SECTION
S-7 | SCALE 3/4" = 1'-0"

No.	DESCRIPTION	DATE	BY
1	BID SET	5/22/20	RKS
2			
3			
4			
5			
6			
7			

REVISIONS (OR CHANGE NOTICES)

Designed By: AECOM Imagine it. Delivered.
One Park Square
6501 Americas Pkwy NE, Suite 900
Albuquerque, New Mexico 87110
(505)-855-7500

Designed For: CITY OF RIO RANCHO

WASTEWATER TREATMENT PLANT 2 SOLIDS HANDLING IMPROVEMENTS

STRUCTURAL DETAILS

ROBERT E. HAWTHORNE NEW MEXICO 8178 5-22-2020 REGISTERED PROFESSIONAL ENGINEER

PROJECT NO.	WW2030
DESIGNED BY:	RKS, REH
DRAWN BY:	CAM
CHECKED BY:	RKS, REH
DATE MODIFIED:	5-22-2020
DPW CHK:	

SHEET: S-11

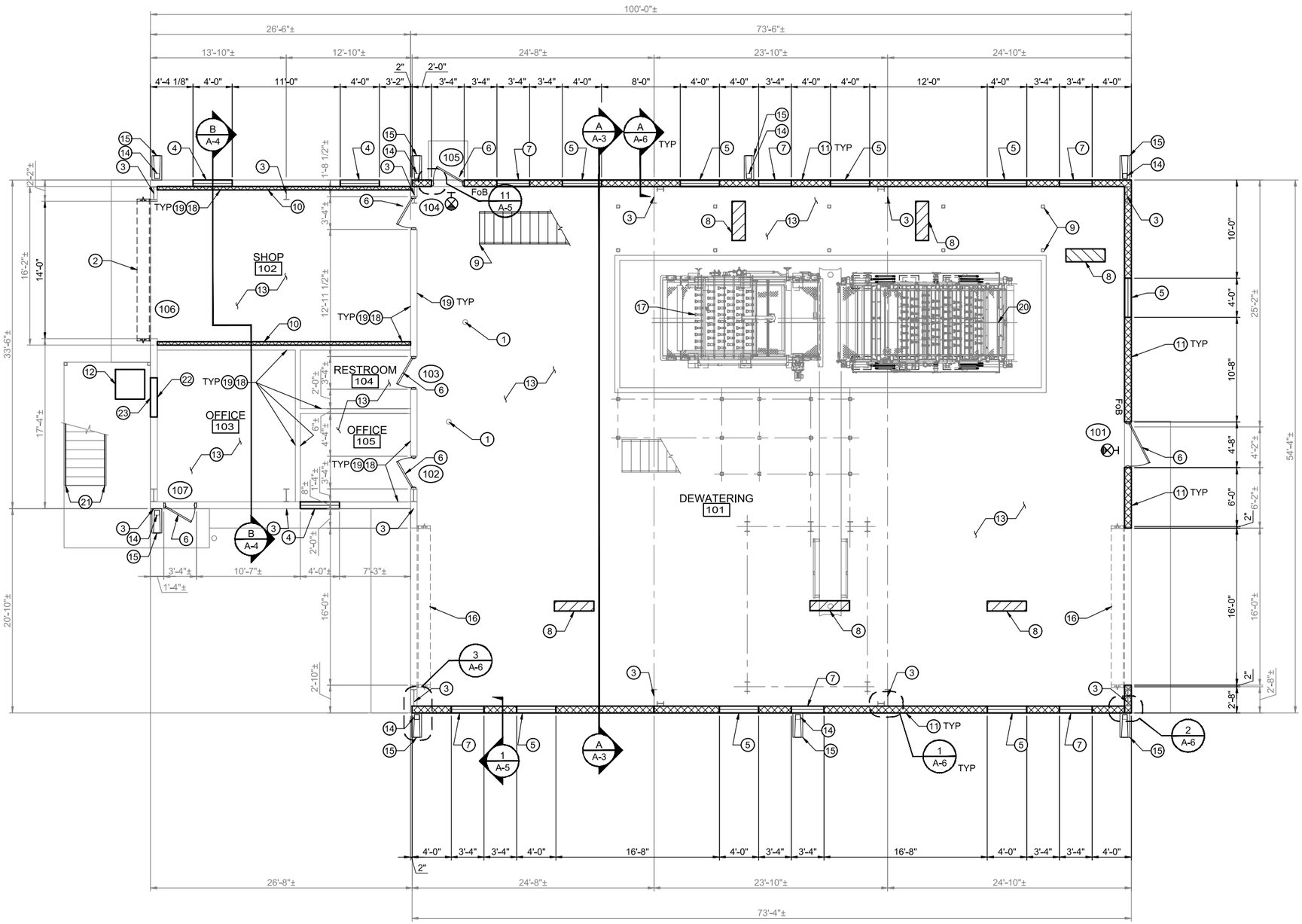

GENERAL NOTES:

1. DIMENSIONS ARE BASED ON OWNERS SUPPLIED RECORD DRAWINGS AND MAY VARY FROM ACTUAL CONDITIONS. CONTRACTOR SHALL FIELD VERIFY ALL DIMENSIONS AND ELEVATIONS.
2. REFERENCE ELEVATION: 5150.01 = EXISTING FINISHED FIRST FLOOR (0'-0").
3. SEE SHEETS A-5, A-6, AND A-7 FOR TYPICAL DETAILS.

KEYED NOTES

1. FLOOR DRAIN.
2. CHAIN DRIVE, 14'-0" x 8'-6" SELF-SUPPORTING ROLL-UP DOOR, SEE SCHEDULE.
3. EXISTING METAL BUILDING FRAME.
4. NEW INSULATED DOUBLE PANE WINDOW, VERIFY SIZE WITH EXISTING WINDOW.
5. 4'-0"x4'-0" INSULATED DOUBLE PANE WINDOW.
6. HOLLOW METAL INSULATED DOOR, DOOR FRAME AND THRESHOLD, SEE SCHEDULE.
7. METAL LOUVER, SEE H-3.
8. TRENCH DRAIN SYSTEM.
9. METAL PLATFORM, STAIRS, AND SUPPORT SYSTEM, SEE STRUCTURAL.
10. 4" STUD WALL W/ ⅝" GYP BOARD EXPOSED FACE.
11. 8" CMU WALL TO 7'-4" ABOVE FINISHED FLOOR OF EXISTING DEWATERING FACILITY. 2" EIFS ON EXTERIOR FACE OF CMU NOT SHOWN.
12. HVAC SYSTEM, SEE HVAC.
13. FLOOR FINISH, SEE SCHEDULE.
14. NEW DOWNSPOUT TO MATCH EXISTING.
15. STANDARD CONCRETE SPLASH BLOCK.
16. EXISTING METAL ROLL-UP DOOR.
17. EXISTING BELT PRESS TO REMAIN.
18. REPAIR DRY WALL AND PAINT WALLS.
19. NEW BASEBOARDS.
20. NEW BELT PRESS, SEE MECHANICAL.
21. NEW HANDRAIL @ 2'-10" ON EXISTING STAIR.
22. INTERIOR GYPSUM WALL BOARD. NEW STUD WALL TO FILL EXISTING WINDOW SPACE.
23. EXTERIOR METAL WALL PANELS.

LEGEND:

- (XXX) SEE SHEET A-7 FOR DOOR SCHEDULE
- [XXX] SEE SHEET A-7 FOR FINISH SCHEDULE
- FoB FoB - FIRE EXTINQUISHER ON BRACKET
- EXIT SIGN/EMERGENCY LIGHTING

FIRST FLOOR PLAN
Scale 3/16"=1'-0"

0 4' 8'

No.	DESCRIPTION	DATE	BY
1	BID SET	5/22/20	RKS
2			
3			
4			
5			
6			
7			

REVISIONS (OR CHANGE NOTICES)

Designed By: AECOM Imagine it. Delivered. One Park Square, 6501 Americas Pkwy NE, Suite 900, Albuquerque, New Mexico 87110 (505)-855-7500

Designed For: CITY OF RIO RANCHO

WASTEWATER TREATMENT PLANT 2 SOLIDS HANDLING IMPROVEMENTS

DEWATERING FACILITY FIRST FLOOR PLAN

ROBERT E. HAWTHORNE NEW MEXICO 8178 5-22-2020 REGISTERED PROFESSIONAL ENGINEER

PROJECT NO.	WW2030
DESIGNED BY:	RKS, REH
DRAWN BY:	CAM
CHECKED BY:	RKS, REH
DATE MODIFIED:	5-22-2020
DPW CHK:	

SHEET: A-1

DWG: L:\16060126 Rio Rancho - Solids Dewatering Design\300-CAD-GIS\310-CAD\20-SHEETS\A-1.dwg USER: jones.ingra
DATE: May 22, 2020 - 1:51pm XREFS: basic.dwt, ARCH_1.dwt, Screened Base_Xbase.dwg
PLOTTED BY: Re: AECOM-Pw-BSR IMAGES: image2_1.png, image3_1.png

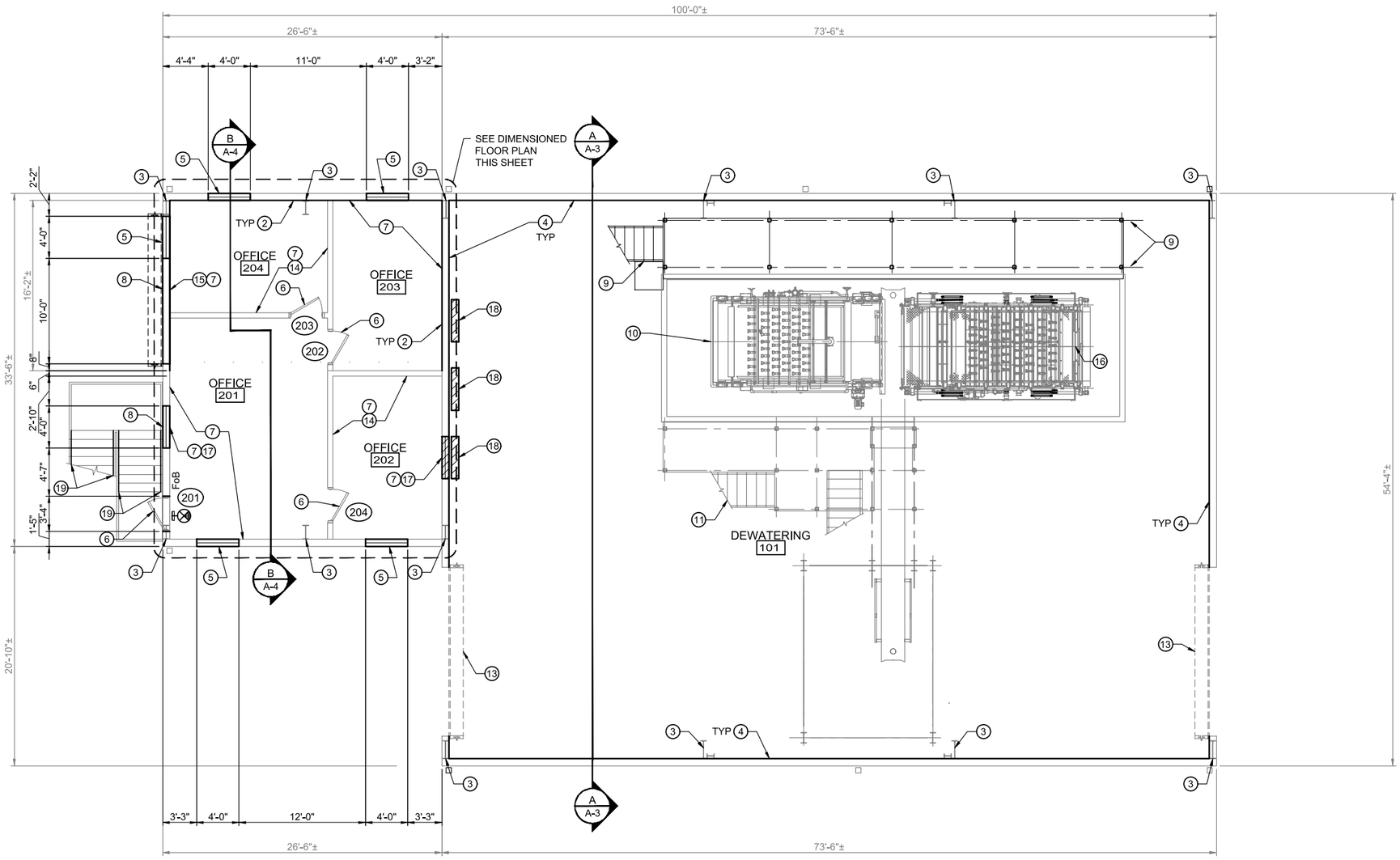

SECOND FLOOR PLAN

Scale 3/16"=1'-0"

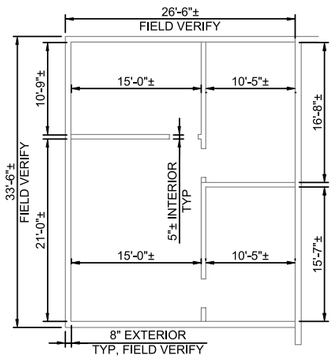

DIMENSIONED SECOND FLOOR PLAN

Scale 1/8"=1'-0"

GENERAL NOTES:

1. DIMENSIONS ARE BASED ON OWNERS SUPPLIED RECORD DRAWINGS AND MAY VARY FROM ACTUAL CONDITIONS. CONTRACTOR SHALL FIELD VERIFY ALL DIMENSIONS AND ELEVATIONS.
2. REFERENCE ELEVATION: 5150.01 = EXISTING FINISHED FLOOR (0'-0").
3. SEE SHEETS A-5, A-6, AND A-7 FOR TYPICAL DETAILS.

KEYED NOTES

1. NOT USED.
2. BASEBOARD.
3. EXISTING METAL BUILDING FRAME.
4. EXISTING LINER PANEL TO REMAIN.
5. 4'-0"x4'-0" INSULATED DOUBLE PANE WINDOW.
6. HOLLOW METAL INSULATED DOOR, DOOR FRAME AND THRESHOLD, SEE SCHEDULE.
7. INTERIOR GYPSUM WALL BOARD.
8. EXTERIOR METAL WALL PANELS.
9. METAL PLATFORM, STAIRS, AND SUPPORT SYSTEM, SEE STRUCTURAL.
10. EXISTING BELT PRESS TO REMAIN.
11. EXISTING PLATFORM TO REMAIN.
12. 2'x2' PANEL ACOUSTIC SUSPENDED CEILING.
13. EXISTING METAL ROLL-UP DOOR.
14. 3 5/8" METAL STUD PARTITION, SEE SCHEDULE.
15. 6" METAL STUD FRAMING W/ INSULATION.
16. NEW BELT PRESS, SEE MECHANICAL
17. NEW STUD WALL TO FILL EXISTING WINDOW SPACE.
18. NEW GYPSUM WALL BOARD WITH LINER PANEL TO MATCH EXISTING IN AREA OF PREVIOUS WINDOW AND AROUND NEW PIPE SUPPORTS.
19. NEW HANDRAIL @ 2'-10" ON EXISTING STAIR.

LEGEND:

- (XXX) SEE SHEET A-7 FOR DOOR SCHEDULE
- XXX SEE SHEET A-7 FOR FINISH SCHEDULE
- FoB FoB - FIRE EXTINQUISHER ON BRACKET
- EXIST SIGN/EMERGENCY LIGHTING

No.	DESCRIPTION	DATE	BY
1	BID SET	5/22/20	RKS
2			
3			
4			
5			
6			
7			

REVISIONS (OR CHANGE NOTICES)

Designed By: AECOM Imagine it. Delivered. One Park Square, 6501 Americas Pkwy NE, Suite 900, Albuquerque, New Mexico 87110, (505)-855-7500

Designed For: CITY OF RIO RANCHO

WASTEWATER TREATMENT PLANT 2 SOLIDS HANDLING IMPROVEMENTS

DEWATERING FACILITY SECOND FLOOR PLAN

ROBERT E. HAWTHORNE, NEW MEXICO, No. 8178, 5-22-2020, REGISTERED PROFESSIONAL ENGINEER

PROJECT NO.	WW2030
DESIGNED BY:	RKS, REH
DRAWN BY:	CAM
CHECKED BY:	RKS, REH
DATE MODIFIED:	5-22-2020
DPW CHK:	

SHEET: A-2

DWG: L:\06\60316126 Rio Rancho - Solids Dewatering Design\WW-C4D-ARC\WW-C4D\2D-SHEETS\A-2.dwg USER: jessehiggins
DATE: May 22, 2020 1:53pm XREFs: basic_1 Ref: AECOM-Pine-BBR IMAGES: image4_2_different_bolts_middle.jpg

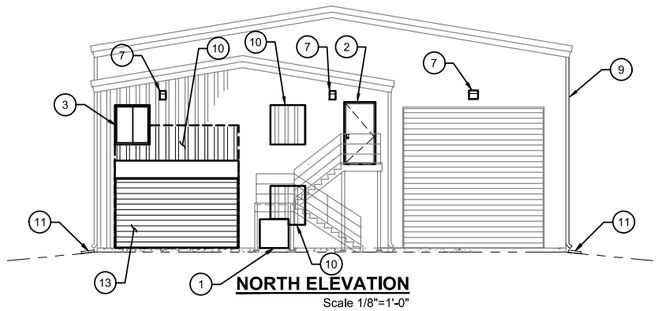

NORTH ELEVATION
Scale 1/8"=1'-0"

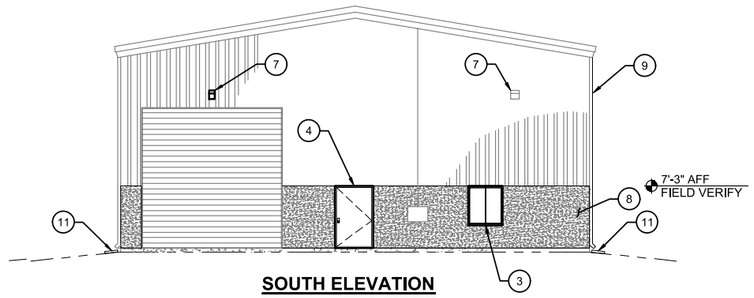

SOUTH ELEVATION
Scale 1/8"=1'-0"

KEYED NOTES

1. HVAC UNIT.
2. NEW HOLLOW METAL INSULATED DOOR 3'-0"x7'-0", DOOR FRAME AND THRESHOLD.
3. NEW 4'-0"x4'-0" INSULATED DOUBLE PANE WINDOW.
4. NEW HOLLOW METAL INSULATED DOOR 4'-0"x7'-0", DOOR FRAME AND THRESHOLD.
5. NEW METAL PLATFORM,STAIRS, AND SUPPORT SYSTEM, SEE STRUCTURAL.
6. NEW FLOOR COATING.
7. NEW EXTERIOR LIGHT FIXTURE.
8. NEW CMU WALL TO 7'-4" ABOVE FINISHED FLOOR OF EXISTING DEWATERING FACILITY WITH 2" EIFS ON EXTERIOR FACE OF CMU.
9. NEW DOWNSPOUT TO MATCH EXISTING.
10. SALVAGED EXTERIOR METAL WALL PANELS.
11. STANDARD CONCRETE SPLASH BLOCK.
12. SOLIDS DISCHARGE BELT PRESS, SEE MECH.
13. CHAIN DRIVE, 14'-0"x8'-6" SELF SUPPORTING ROLL-UP DOOR.

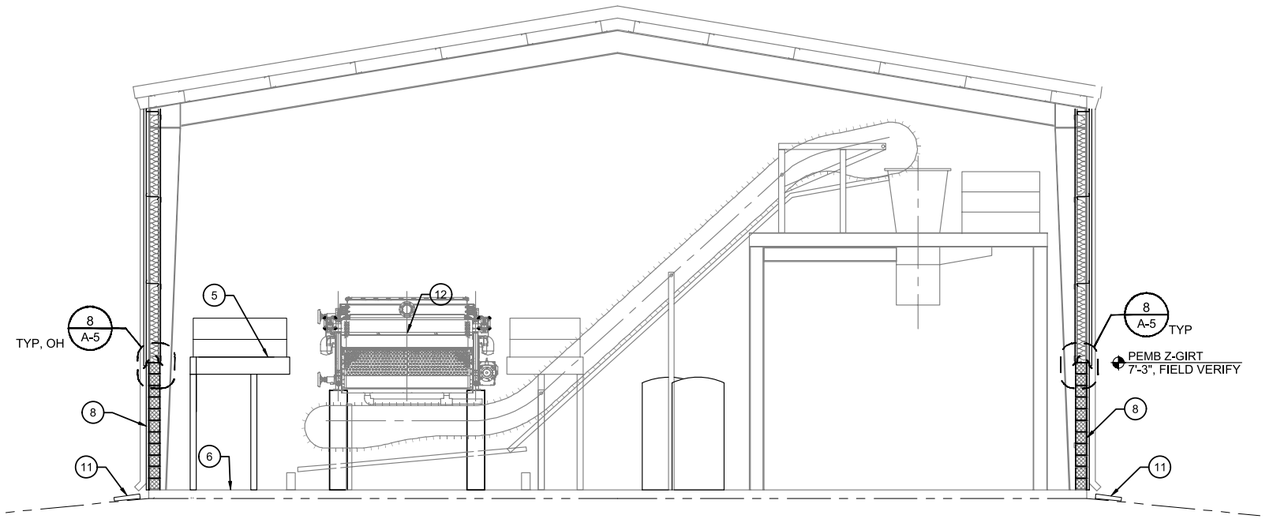

BUILDING SECTION A-A
Scale 1/4"=1'-0"

No.	DESCRIPTION	DATE	BY
1	BID SET	5/22/20	RKS
2			
3			
4			
5			
6			
7			

REVISIONS (OR CHANGE NOTICES)

Designed By: AECOM Imagine it. Delivered.
One Park Square
6501 Americas Pkwy NE, Suite 900
Albuquerque, New Mexico 87110
(505)-855-7500

Designed For: CITY OF RIO RANCHO

WASTEWATER TREATMENT
PLANT 2 SOLIDS HANDLING
IMPROVEMENTS

DEWATERING FACILITY
EXTERIOR ELEVATIONS
AND SECTION

ROBERT E. HAWTHORNE
NEW MEXICO
8178
5-22-2020
REGISTERED PROFESSIONAL ENGINEER

PROJECT NO.	WW2030
DESIGNED BY:	RKS, REH
DRAWN BY:	CAM
CHECKED BY:	RKS, REH
DATE MODIFIED:	5-22-2020
DPW CHK:	

SHEET: A-3

DWG: L:\WW2030\26 Rio Rancho - Solids Dewatering Design\300-CAD-GIS\300-CAD\20-SHEETS\A-3.dwg USER: jossa.higgins
DATE: May 22, 2020 - 1:54pm XREFS: A-1.dwg; A-2.dwg; A-4.dwg; A-5.dwg; A-6.dwg; A-7.dwg; A-8.dwg; A-9.dwg; A-10.dwg; A-11.dwg; A-12.dwg; A-13.dwg; A-14.dwg; A-15.dwg; A-16.dwg; A-17.dwg; A-18.dwg; A-19.dwg; A-20.dwg; A-21.dwg; A-22.dwg; A-23.dwg; A-24.dwg; A-25.dwg; A-26.dwg; A-27.dwg; A-28.dwg; A-29.dwg; A-30.dwg; A-31.dwg; A-32.dwg; A-33.dwg; A-34.dwg; A-35.dwg; A-36.dwg; A-37.dwg; A-38.dwg; A-39.dwg; A-40.dwg; A-41.dwg; A-42.dwg; A-43.dwg;

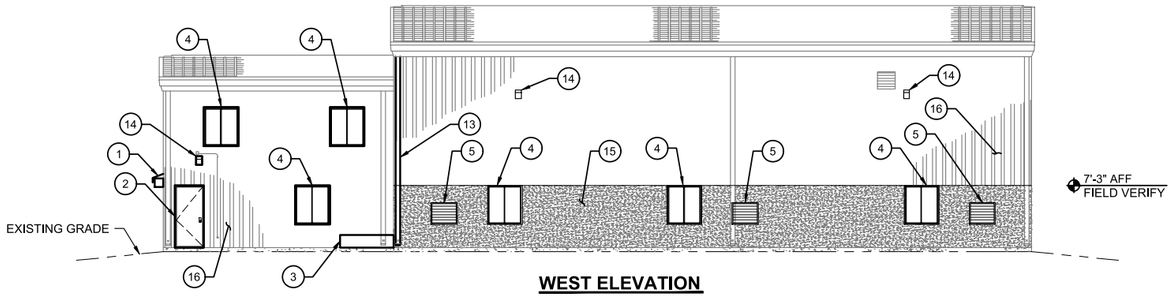

WEST ELEVATION
Scale 1/8"=1'-0"

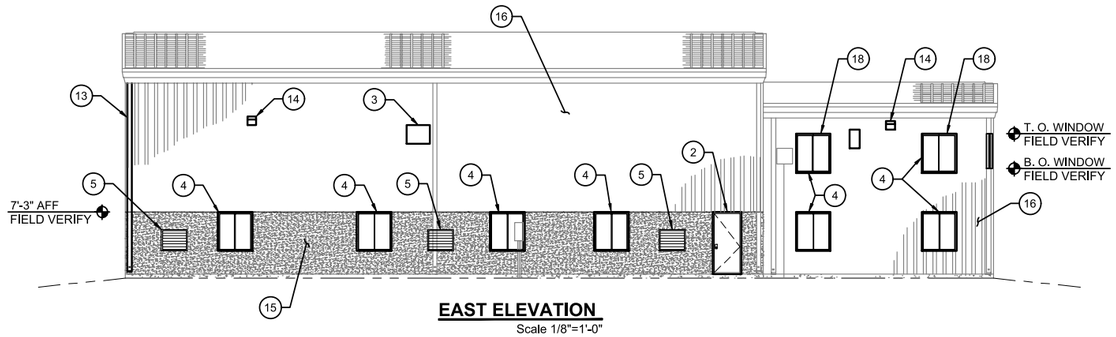

EAST ELEVATION
Scale 1/8"=1'-0"

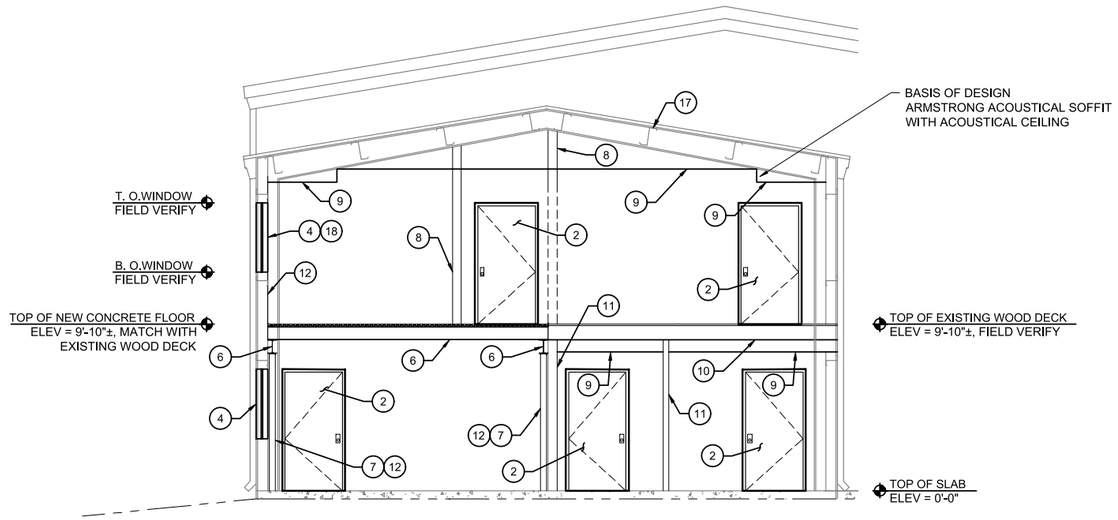

BUILDING SECTION B-B
Scale 1/4"=1'-0"

KEYED NOTES

1. CHAIN DRIVE, 14'-0"x8'-6" ROLL-UP DOOR.
2. NEW HOLLOW METAL INSULATED DOOR 3'-0"x7'-0", DOOR FRAME AND THRESHOLD.
3. REPLACEMENT SALVAGED METAL WALL PANEL.
4. NEW 4'-0"x4'-0" INSULATED DOUBLE PANE WINDOW.
5. NEW LOUVER, SEE HVAC.
6. W6 BEAM.
7. 4" WALL STUD.
8. 3 5/8" METAL STUD PARTITION WALL, SEE SCHEDULE.
9. ACOUSTICAL CEILING, SEE A-8 CEILING PLAN.
10. EXISTING 8" DEEP CHANNEL JOIST @ 24" O.C. FIELD VERIFY.
11. EXISTING WALL.
12. INTERIOR GYPSUM WALL BOARD.
13. NEW DOWNSPOUT TO MATCH EXISTING.
14. NEW EXTERIOR LIGHT FIXTURE.
15. NEW CMU WALL TO 7'-4" ABOVE FINISHED FLOOR OF EXISTING DEWATERING FACILITY WITH 2" EIFS ON EXTERIOR FACE OF CMU.
16. EXISTING EXTERIOR METAL WALL PANELS.
17. Z-PURLIN @ 5'-0" O.C., FIELD VERIFY.
18. NEW WINDOWS SHALL BE BETWEEN EXISTING PEMB HORIZONTAL Z-GIRTS. VERIFY ELEVATIONS PRIOR TO CONSTRUCTION.

Rio Rancho City of Vision

No.	DESCRIPTION	DATE	BY
1	BID SET	5/22/20	RKS
2			
3			
4			
5			
6			
7			

REVISIONS (OR CHANGE NOTICES)

Designed By: AECOM Imagine it. Delivered.
One Park Square
6501 Americas Pkwy NE, Suite 900
Albuquerque, New Mexico 87110
(505)-855-7500

Designed For:
CITY OF RIO RANCHO

WASTEWATER TREATMENT
PLANT 2 SOLIDS HANDLING
IMPROVEMENTS

DEWATERING FACILITY
EXTERIOR ELEVATIONS

ROBERT E. HAWTHORNE
NEW MEXICO
No. 8178
5-22-2020
REGISTERED PROFESSIONAL ENGINEER

PROJECT NO.	WW2030
DESIGNED BY:	RKS, REH
DRAWN BY:	CAM
CHECKED BY:	RKS, REH
DATE MODIFIED:	5-22-2020
DPW CHK:	

SHEET:
A-4

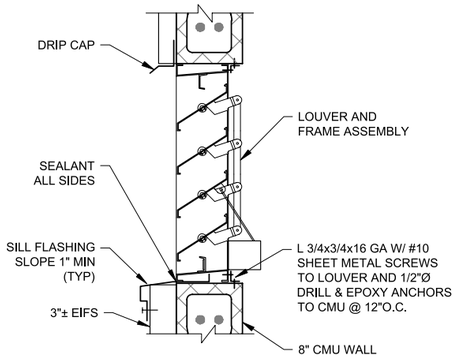

1 | TYPICAL LOUVER
A-1 | Scale 1 1/2" = 1'-0"

(JAMB SIMILAR)

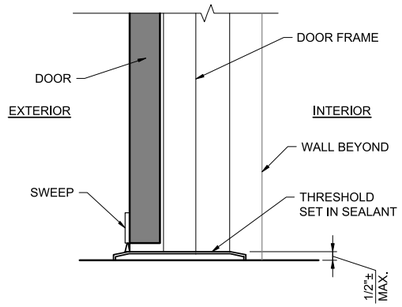

2 | DOOR SILL
- | Scale 3" = 1'-0"

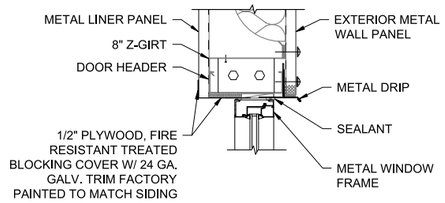

3 | TYPICAL WINDOW HEAD
- | Scale 1 1/2" = 1'-0"

NOTE: VERIFY WINDOW SETBACK DIMENSION BEFORE FABRICATION AT CMU AND METAL BUILDING WALLS.

AT METAL BUILDING

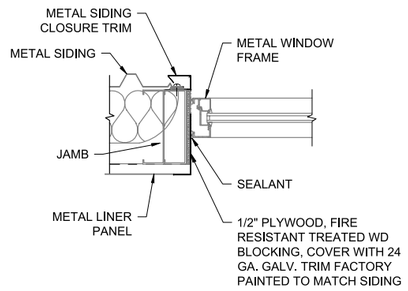

4 | TYPICAL WINDOW JAMB
- | Scale 1 1/2" = 1'-0"

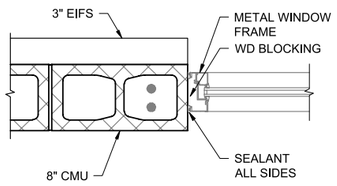

AT CMU WALL

5 | TYPICAL WINDOW JAMB
- | Scale 1 1/2" = 1'-0"

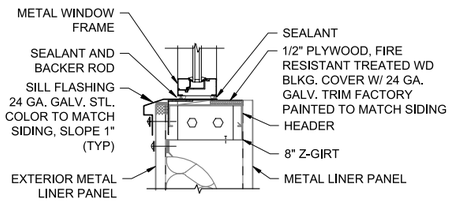

AT METAL BUILDING

6 | TYPICAL WINDOW SILL
- | Scale 1 1/2" = 1'-0"

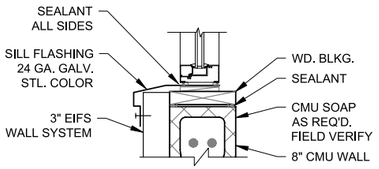

AT CMU WALL

7 | TYPICAL WINDOW SILL
- | Scale 1 1/2" = 1'-0"

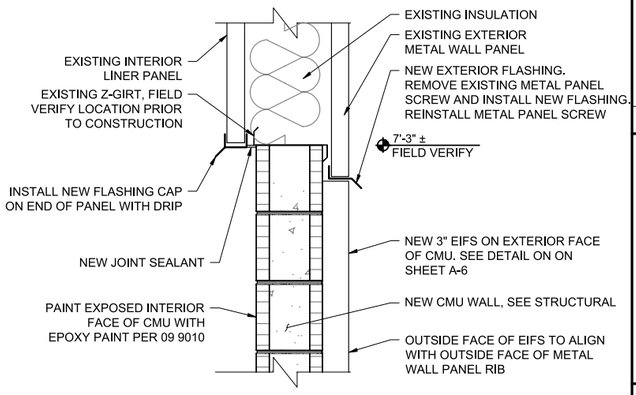

8 | PANEL SUPPORT DETAIL
A-3 | Scale 1 1/2" = 1'-0"

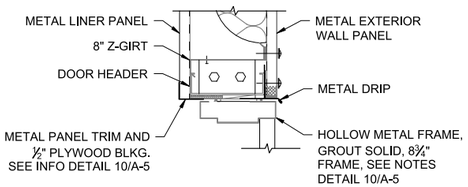

AME,

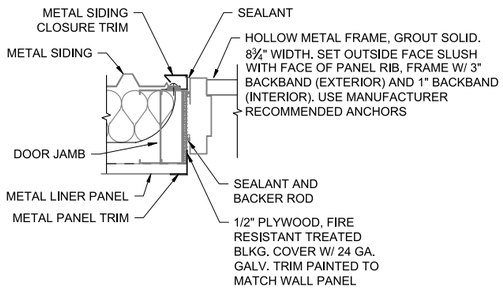

AT METAL BUILDING

9 | TYPICAL HEAD
- | Scale 1 1/2" = 1'-0"

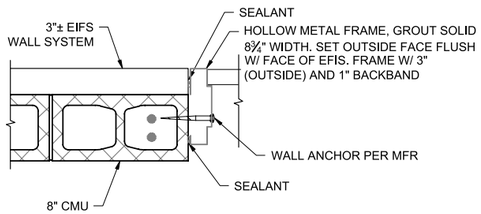

AT METAL BUILDING

10 | TYPICAL JAMB
- | Scale 1 1/2" = 1'-0"

AT CMU WALL

11 | TYPICAL JAMB
A-1 | Scale 1 1/2" = 1'-0"

No.	DESCRIPTION	DATE	BY
1	BID SET	5/22/20	RKS
2			
3			
4			
5			
6			
7			

REVISIONS (OR CHANGE NOTICES)

Designed By: AECOM Imagine it. Delivered. 6501 America's Pkwy NE, Suite 900 Albuquerque, New Mexico 87110 (505)-855-7500

Designed For: CITY OF RIO RANCHO

WASTEWATER TREATMENT PLANT 2 SOLIDS HANDLING IMPROVEMENTS

TYPICAL DETAILS

ROBERT E. HAWTHORNE NEW MEXICO 8178 REGISTERED PROFESSIONAL ENGINEER 5-22-2020

PROJECT NO.	WW2030
DESIGNED BY:	RKS, REH
DRAWN BY:	CAM
CHECKED BY:	RKS, REH
DATE MODIFIED:	5-22-2020
DPW CHK:	

SHEET: A-5

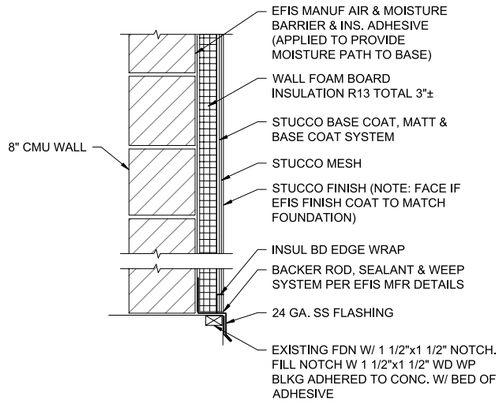

A | CMU WALL SECTION
A-1 | Scale 1 1/2" = 1'-0"

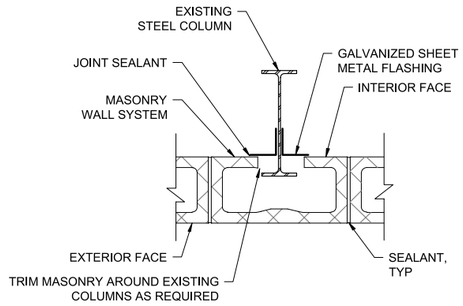

NOTE: EIFS SYSTEM NOT SHOWN.

1 | COLUMN DETAIL @ MASONRY
A-1 | Scale 1 1/2" = 1'-0"

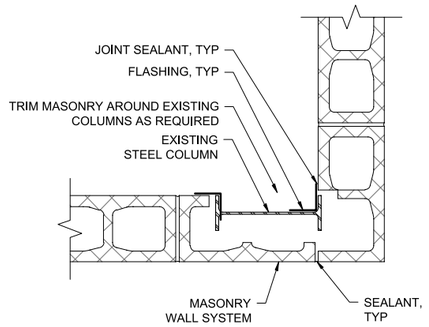

NOTE: EIFS SYSTEM NOT SHOWN.

2 | COLUMN DETAIL @ MASONRY
A-1 | Scale 1 1/2" = 1'-0"

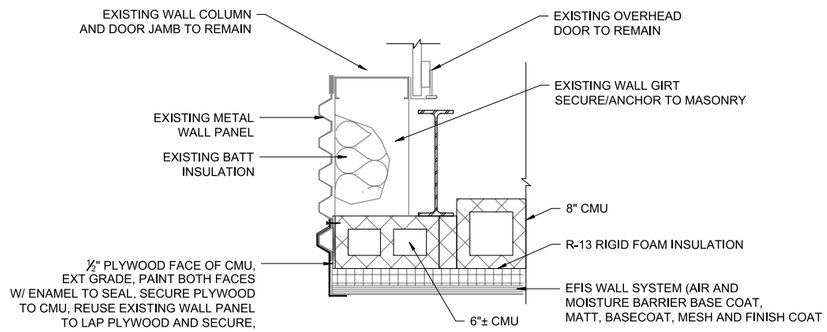

NOTE: AT WALLS WITH EFIS, FACE OF EFIS TO MATCH FOUNDATION FACE.

3 | NW CORNER AT DEWATERING 101
A-1 | Scale 1 1/2" = 1'-0"

No.	DESCRIPTION	DATE	BY
1	BID SET	5/22/20	RKS
2			
3			
4			
5			
6			
7			

REVISIONS (OR CHANGE NOTICES)

Designed By: AECOM Imagine it. Delivered.
One Park Square
6501 Americas Pkwy NE, Suite 900
Albuquerque, New Mexico 87110
(505)-855-7500

Designed For: CITY OF RIO RANCHO

WASTEWATER TREATMENT PLANT 2 SOLIDS HANDLING IMPROVEMENTS

SECTIONS AND DETAILS

ROBERT E. HAWTHORNE NEW MEXICO NO. 8178 5-22-2020 REGISTERED PROFESSIONAL ENGINEER

PROJECT NO.	WW2030
DESIGNED BY:	RKS, REH
DRAWN BY:	CAM
CHECKED BY:	RKS, REH
DATE MODIFIED:	5-22-2020
DPW CHK:	

SHEET: A-6

DOOR SCHEDULE

MARK	SIZE W x H	THK	FACE MATERIAL	CORE MATERIAL	DOOR TYPE	FRAME TYPE	HARDWARE	FRAME MATERIAL	REMARKS
101	4'-0"x7'-0"	1 3/4"	STEEL	HM	B	2	1	HM	INSULATED
102	3'-0"x7'-0"	1 3/4"	STEEL	HM	A	1	1	HM	INSULATED
103	3'-0"x7'-0"	1 3/4"	STEEL	HM	A	1	1	HM	INSULATED
104	3'-0"x7'-0"	1 3/4"	STEEL	HM	A	1	1	HM	INSULATED
105	3'-0"x7'-0"	1 3/4"	STEEL	HM	A	1	1	HM	INSULATED
106	14'-0"x8'-6"	-	STEEL	-	-	-	-	-	CHAIN OPERATED, STEEL GUIDE INSULATED (SELF-SUPPORTING) EXTERIOR MOUNTING, WITH SLOPED HOOD
107	3'-0"x7'-0"	1 3/4"	STEEL	HM	A	1	1	HM	INSULATED
201	3'-0"x7'-0"	1 3/4"	STEEL	HM	A	1	1	HM	INSULATED
202	3'-0"x7'-0"	1 3/4"	STEEL	HM	A	1	1	HM	NO CLOSER, SWEEP, OR THRESHOLD REQUIRED
203	3'-0"x7'-0"	1 3/4"	STEEL	HM	A	1	1	HM	NO CLOSER, SWEEP, OR THRESHOLD REQUIRED
204	3'-0"x7'-0"	1 3/4"	STEEL	HM	A	1	1	HM	NO CLOSER, SWEEP, OR THRESHOLD REQUIRED

FINISH SCHEDULE

MARK	ROOM	BASE	FLOOR	N WALL	S WALL	E WALL	W WALL	CEILING	REMARKS
101	DEWATERING	NONE	EXISTING CONCRETE W/ NEW GROUT AND FLOOR COATING	EXISTING LINER PANEL & NEW PAINTED CMU WALL	EXISTING LINER PANEL & NEW PAINTED CMU WALL	EXISTING LINER PANEL & NEW PAINTED CMU WALL	EXISTING LINER PANEL & NEW PAINTED CMU WALL	-	CLEAN EXISTING LINER PANELS
102	SHOP	4" TESIL BASE	EXISTING CONCRETE	GYPSUM BOARD	GYPSUM BOARD	GYPSUM BOARD	GYPSUM BOARD	-	PAINT NEW GYPSUM BOARD, REPAINT EXISTING GYPSUM BOARD
103	OFFICE	4" TESIL BASE	VINYL COMPOSITION TILE FLOOR	GYPSUM BOARD	GYPSUM BOARD	GYPSUM BOARD	GYPSUM BOARD	GYPSUM BOARD	PAINT NEW GYPSUM BOARD, REPAINT EXISTING GYPSUM BOARD
104	RESTROOM	4" TESIL BASE	VINYL COMPOSITION TILE FLOOR	GYPSUM BOARD	GYPSUM BOARD	GYPSUM BOARD	GYPSUM BOARD	GYPSUM BOARD	PAINT NEW GYPSUM BOARD, REPAINT EXISTING GYPSUM BOARD
105	OFFICE	4" TESIL BASE	VINYL COMPOSITION TILE FLOOR	GYPSUM BOARD	GYPSUM BOARD	GYPSUM BOARD	GYPSUM BOARD	GYPSUM BOARD	PAINT NEW GYPSUM BOARD, REPAINT EXISTING GYPSUM BOARD
201	OFFICE	4" TESIL BASE	VINYL COMPOSITION TILE FLOOR	GYPSUM BOARD	GYPSUM BOARD	GYPSUM BOARD	GYPSUM BOARD	GYPSUM BOARD	PAINT NEW GYPSUM BOARD
202	OFFICE	4" TESIL BASE	VINYL COMPOSITION TILE FLOOR	GYPSUM BOARD	GYPSUM BOARD	GYPSUM BOARD	GYPSUM BOARD	GYPSUM BOARD	PAINT NEW GYPSUM BOARD
203	OFFICE	4" TESIL BASE	VINYL COMPOSITION TILE FLOOR	GYPSUM BOARD	GYPSUM BOARD	GYPSUM BOARD	GYPSUM BOARD	GYPSUM BOARD	PAINT NEW GYPSUM BOARD
204	OFFICE	4" TESIL BASE	VINYL COMPOSITION TILE FLOOR	GYPSUM BOARD	GYPSUM BOARD	GYPSUM BOARD	GYPSUM BOARD	GYPSUM BOARD	PAINT NEW GYPSUM BOARD

* NOTE: CLEAN EXISTING LINER PANELS

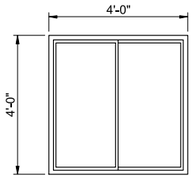

WINDOW

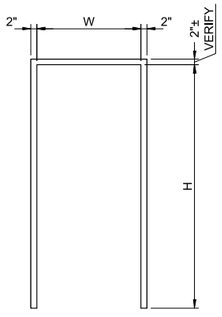

FRAME-TYPE 1

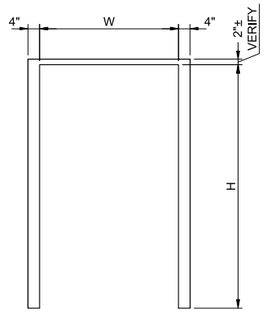

FRAME-TYPE 2

NOTE: FRAME DEPTHS VARY. DOORS 102, 103, 104, 202, 203, & 204 ARE KD WRAP AROUND FOR NOMINAL 5" WALL. REMAINDER PER DETAIL ON SHEET A-5.

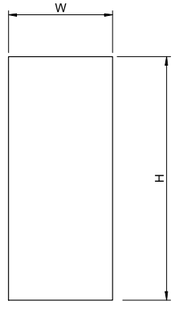

DOOR
TYPE A-3'x7' METAL
TYPE B-4'x7' METAL

HARDWARE SCHEDULE - TYPE 1

EACH DOOR TO HAVE:

#	PART	PART NUMBER	MFR.
3	HINGES	4 1/2"x4 1/2", BB51-US32D-NRP	PBB OR EQUAL
1	LOCKSET	ND53PD RHO LEVER	SCHLAGE OR EQUAL
1	PRIVACY LOCKSET (DOOR 103)	ND40S	SCHLAGE OR EQUAL
1	CLOSER	SEE NOTES BELOW	LCH OR EQUAL
1	THRESHOLD	424 ALUM	NGP OR EQUAL
1	SEALS	160S	NGP OR EQUAL
1	SWEEP	200N	NGP OR EQUAL
1	WALL STOP	1270 (WHERE REQ'D)	TRIMCO OR EQUAL
1	KICK PLATE	16"x2" LDW	HAGER

NOTES:

1. ALL LOCKSETS AND LOCKSET COMPONENTS FOR THE PROJECT SHALL BE BY THE SAME MANUFACTURER. ALL LOCKS SHALL BE MASTER KEYED IN ACCORDANCE WITH THE OWNERS STANDARDS.
2. HARDWARE MUST PERMIT ALL DOORS TO OPEN FROM THE INTERIOR BY ONLY ONE OPERATION, BY TURNING A LEVER, WITHOUT THE USE OF A KEY OR ANY SPECIAL KNOWLEDGE OR EFFORT.
3. ALL DOORS SHALL BE PRIMED AND PAINTED. DOOR COLOR SHALL BE AS SELECTED BY OWNER.
4. PROVIDE ADDED HINGES IF REQ'D AT DOOR 101 FOR DOOR WEIGHT. PROVIDE BALL BEARING, 5 KNUCKLE, COMMERCIAL GRADE.
5. 4110 N CUSH HO ALL DOORS UNLESS NOTED. NO CLOSERS AT 202, 203, & 204. 4011 HO DOORS 102 & 104. 4011 DOOR 103.
6. BUDGET $300 FOR PLASTIC LAMINATED, ENGRAVED LETTERING DOOR/ROOM SIGNS.

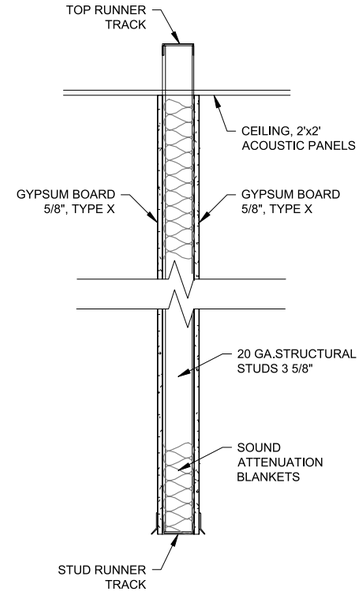

STUD PARTITION
Scale NTS

No.	DESCRIPTION	DATE	BY
1	BID SET	5/22/20	RKS
2			
3			
4			
5			
6			
7			

REVISIONS (OR CHANGE NOTICES)

Designed By: AECOM Imagine it. Delivered. One Park Square, 6501 Americas Pkwy NE, Suite 900, Albuquerque, New Mexico 87110, (505)-855-7500

Designed For: CITY OF RIO RANCHO

WASTEWATER TREATMENT PLANT 2 SOLIDS HANDLING IMPROVEMENTS

SCHEDULES AND DETAILS

ROBERT E. HAWTHORNE, NEW MEXICO, NO. 8178, 5-22-2020, REGISTERED PROFESSIONAL ENGINEER

PROJECT NO.	WW2030
DESIGNED BY:	RKS, REH
DRAWN BY:	CAM
CHECKED BY:	RKS, REH
DATE MODIFIED:	5-22-2020
DPW CHK:	

SHEET: A-7

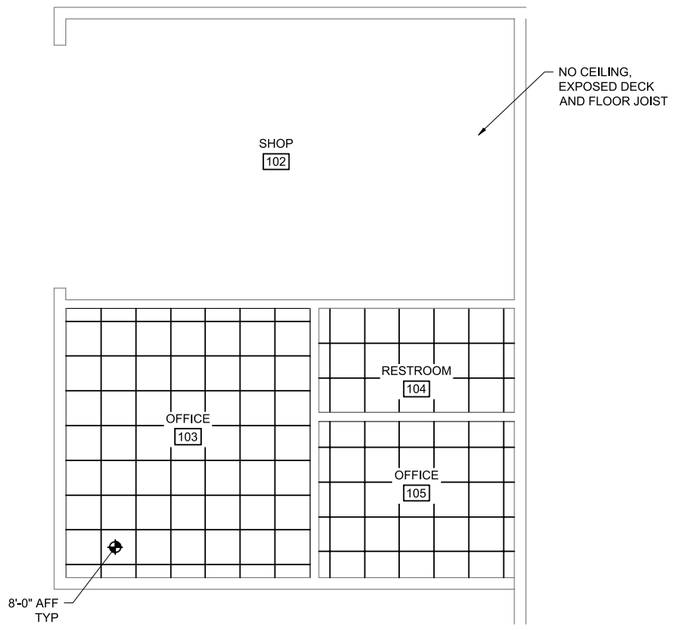

1ST FLOOR CEILING TILE LAYOUT
Scale 1/4" = 1'-0"

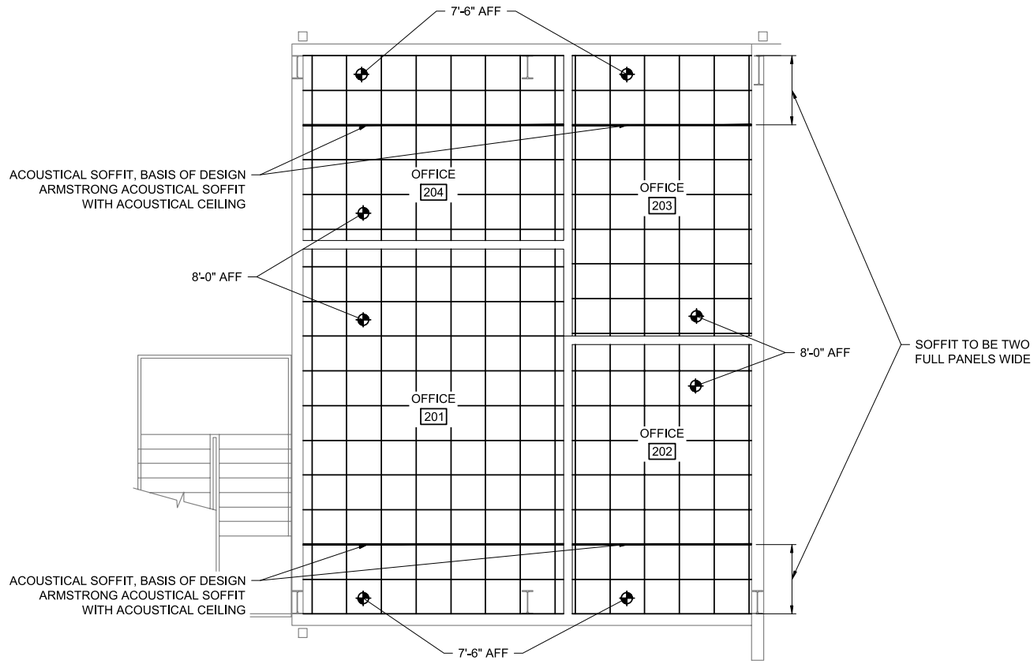

2ND FLOOR CEILING TILE LAYOUT
Scale 1/4" = 1'-0"

CEILING GENERAL NOTES:

A. CEILINGS ARE 8'-0" ABOVE FINISHED FLOOR UNLESS NOTED OTHERWISE.
B. CONSTRUCT SUSPENDED CEILINGS ACCORDING TO REQUIREMENTS OF SEISMIC CATEGORY LISTED ON SHEET S-001.
C. INSTALL SUSPENDED ACOUSTICAL CEILING SYSTEMS PER CEILING MANUFACTURER'S SEISMIC DESIGN CATEGORY DETAILS. PROVIDE MANUFACTURER'S INSTALLATION MANUAL AND SPECIFICATIONS AT PROJECT SITE FOR C.O.R.R. INSPECTOR AT TIME OF INSPECTION.
D. SEAL JOINT BETWEEN LAY-IN CEILING GRID AND WALLS.
E. PROVIDE CEILING ACCESS PANELS AS REQUIRED. COORDINATE WITH PLUMBING, MECHANICAL AND ELECTRICAL WORK.

Rio Rancho City of Vision

No.	DESCRIPTION	DATE	BY
1	BID SET	5/22/20	RKS
2			
3			
4			
5			
6			
7			

REVISIONS (OR CHANGE NOTICES)

Designed By:
AECOM Imagine it. Delivered.
One Park Square
6501 Americas Pkwy NE, Suite 900
Albuquerque, New Mexico 87110
(505)-855-7500

Designed For:
CITY OF RIO RANCHO

WASTEWATER TREATMENT
PLANT 2 SOLIDS HANDLING
IMPROVEMENTS

CEILING PLAN

ROBERT E. HAWTHORNE
NEW MEXICO
No. 8178
5-22-2020
REGISTERED PROFESSIONAL ENGINEER

PROJECT NO.	WW2030
DESIGNED BY:	RKS, REH
DRAWN BY:	CAM
CHECKED BY:	RKS, REH
DATE MODIFIED:	5-22-2020
DPW CHK:	

SHEET:
A-8

DWG: L:\06161126 Rio Rancho - Solids Dewatering Design\WW-CAD-GIS\WW-CAD\05-SHEETS\A-8.dwg USER: jessehiggins
DATE: May 22, 2020 3:26pm XREFs: WW2030_Imagine_BASE.dwt BASE: WW2030_Imagine_BASE.dwt WW2030_merge2_deferred_base_model.dwg

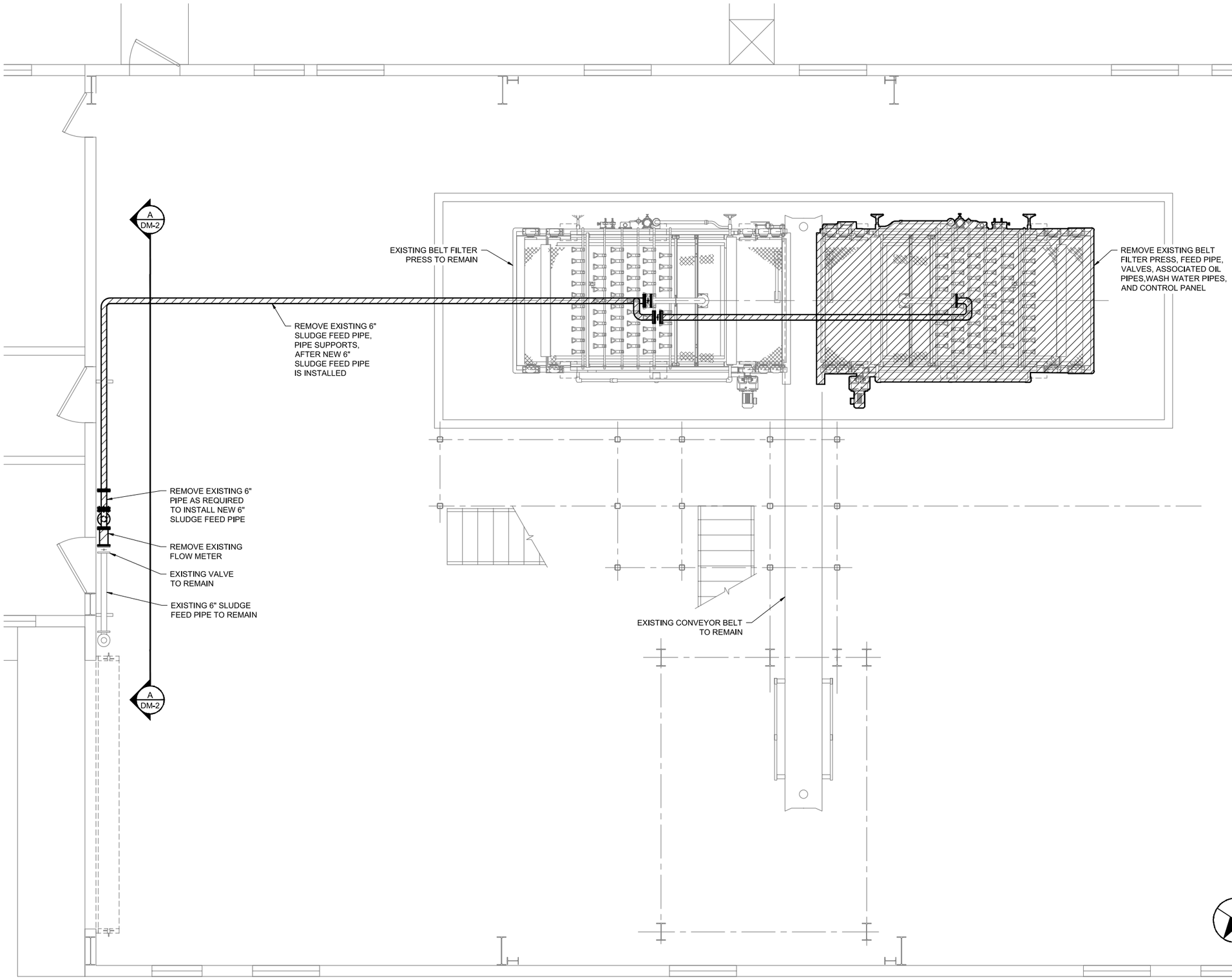

PARTIAL DEWATERING FLOOR PLAN

Scale 3/8"=1'-0"

No.	DESCRIPTION	DATE	BY
1	BID SET	5/22/20	RKS
2			
3			
4			
5			
6			
7			

REVISIONS (OR CHANGE NOTICES)

Designed By: AECOM — Imagine it. Delivered.
6501 Americas Pkwy NE, Suite 900
Albuquerque, New Mexico 87110
(505)-855-7500

Designed For: CITY OF RIO RANCHO

WASTEWATER TREATMENT
PLANT 2 SOLIDS HANDLING
IMPROVEMENTS

DEWATERING SYSTEM
DEMOLITION PLAN

RIPAN K. SAHA
NEW MEXICO
24280
5-22-2020
PROFESSIONAL ENGINEER

PROJECT NO.	WW2030
DESIGNED BY:	RKS, REH
DRAWN BY:	CAM
CHECKED BY:	RKS, REH
DATE MODIFIED:	5-22-2020
DPW CHK:	

SHEET:
DM-1

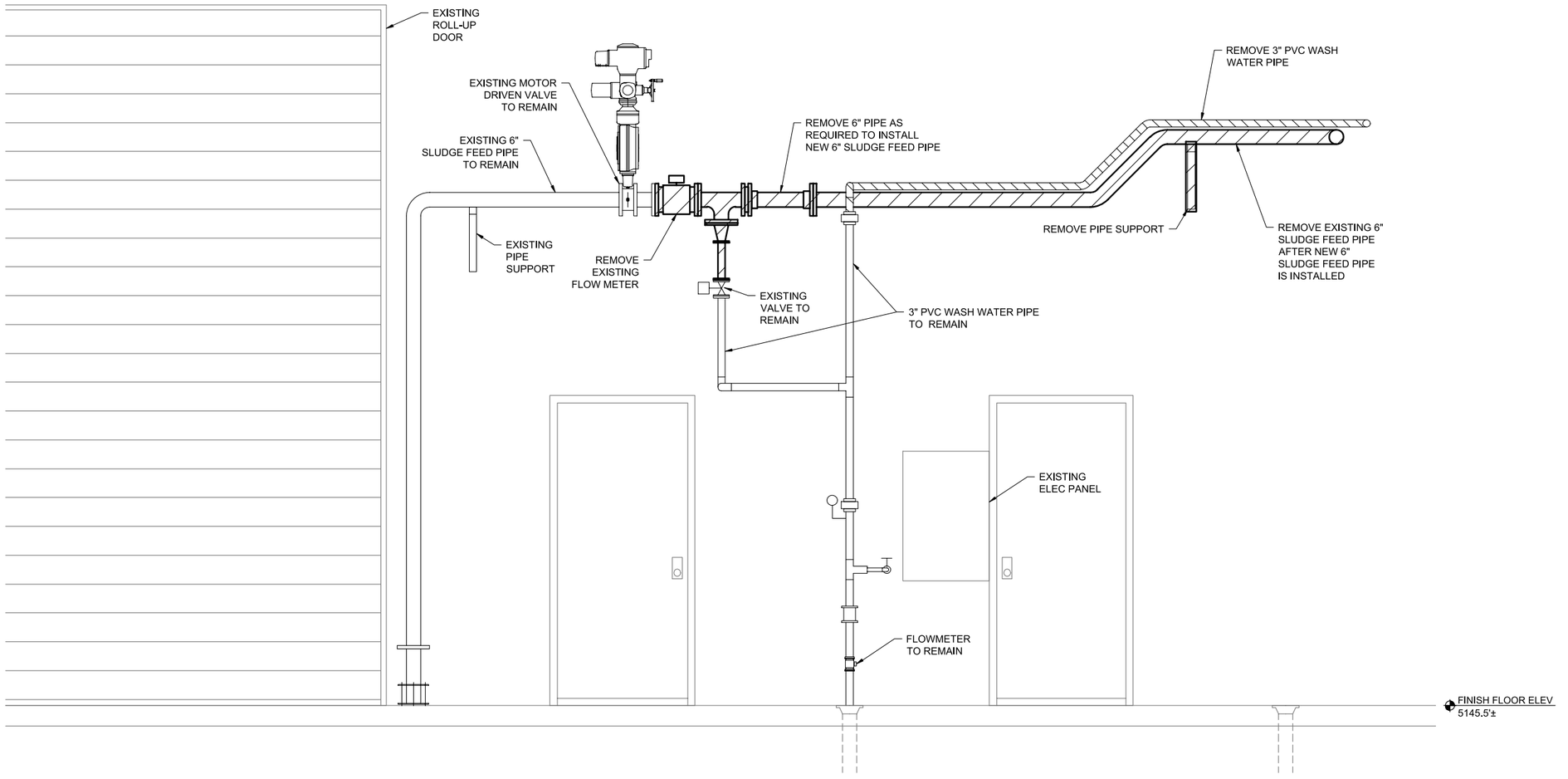

SECTION A DM-1

No.	DESCRIPTION	DATE	BY
7			
6			
5			
4			
3			
2			
1	BID SET	5/22/20	RKS

REVISIONS (OR CHANGE NOTICES)

Designed By:
AECOM Imagine it. Delivered.
One Park Square
6501 Americas Pkwy NE, Suite 900
Albuquerque, New Mexico 87110
(505)-855-7500

Designed For:
CITY OF RIO RANCHO

WASTEWATER TREATMENT
PLANT 2 SOLIDS HANDLING
IMPROVEMENTS

DEWATERING SYSTEM
DEMOLITION ELEVATION

RIPAN K. SAHA
24260
5-22-2020

PROJECT NO.	WW2030
DESIGNED BY:	RKS, REH
DRAWN BY:	CAM
CHECKED BY:	RKS, REH
DATE MODIFIED:	5-22-2020
DPW CHK:	

SHEET:
DM-2

DWG: L:\60610126 Rio Rancho – Solids Dewatering Design\900-CAD-GIS\910-CAD\20-SHEETS\DM-2.dwg USER: jesse.higgins
DATE: May 22, 2020 2:04pm XREFS: BASE-1 RR-AECOM-PW-BDR IMAGES: imagine_it_delivered_black_300dpi.jpg

PIPING NOTES

1. SIZE OF FITTINGS SHOWN ON DRAWINGS SHALL CORRESPOND TO ADJACENT STRAIGHT RUN OF PIPE, UNLESS OTHERWISE INDICATED. TYPE OF JOINT AND FITTING MATERIAL SHALL BE THE SAME AS SHOWN FOR ADJACENT STRAIGHT RUN OF PIPE.
2. LOCATION AND NUMBER OF PIPE HANGERS AND PIPE SUPPORTS SHOWN ARE ONLY APPROXIMATE. FINAL SUPPORT REQUIREMENTS SHALL BE DETERMINED BY THE MANUFACTURER TO ADEQUATELY SUPPORT THE WORK AND APPROVED BY THE ENGINEER PRIOR TO INSTALLATION.
3. ALL FLEXIBLE CONNECTORS OR FLANGED COUPLING ADAPTERS SHALL BE PROVIDED WITH THRUST TIES, BLOCKS, OR ANCHORS, UNLESS OTHERWISE NOTED. THRUST PROTECTION SHALL BE ADEQUATE FOR TEST PRESSURES SPECIFIED.
4. SYMBOLS, LEGENDS, AND PIPE USE IDENTIFICATIONS SHOWN SHALL BE FOLLOWED THROUGHOUT THE DRAWINGS, WHEREVER APPLICABLE. ALL OF THE VARIOUS APPLICATIONS ARE NOT NECESSARILY USED IN THE PROJECT.
5. NUMBER AND LOCATION OF UNIONS SHOWN ON DRAWINGS ARE ONLY APPROXIMATE. PROVIDE ALL UNIONS NECESSARY TO FACILITATE CONVENIENT REMOVAL OF VALVES AND MECHANICAL EQUIPMENT.
6. THE CONTRACTOR FOR THIS PROJECT IS RESPONSIBLE FOR COORDINATING AND PERFORMING THE CONNECTION OF THE PIPING AND ASSOCIATED APPURTENANCES INSTALLED UNDER CONTRACT TO BOTH THE EXISTING PIPING AND FACILITIES.
7. PRIOR TO SUBMITTING PIPING DRAWINGS FOR ANY NEW PIPE THAT IS TO CONNECT TO OR CROSS AN EXISTING PIPE OR STRUCTURE, THE CONTRACTOR SHALL EXPOSE THE EXISTING PIPE OR STRUCTURE TO VERIFY EXACT LOCATION, SIZE, MATERIAL, AND INVERT ELEVATION.
8. WHEN GROUTING OR CASTING CONCRETE AROUND PVC PIPE, CONTRACTOR SHALL USE WATER STOPS AS RECOMMENDED BY THE MANUFACTURER.
9. CLOSE ALL OPEN PIPE SECTIONS AT THE END OF EACH WORK DAY.
10. ALL NEW SLUDGE PIPING SHALL BE GLASS LINED. SEE SPECIFICATION 09-90-00 FOR PIPE COATING REQUIREMENTS.
11. THE CONTRACTOR IS REQUIRED TO COORDINATE WITH THE OWNER'S PERSONNEL TO FIELD VERIFY INSTALLATION REQUIREMENTS FOR VALVE FLOW DIRECTION PRIOR TO INSTALLATION OF EACH VALVE.

FLANGE JOINT PIPING LEGEND:

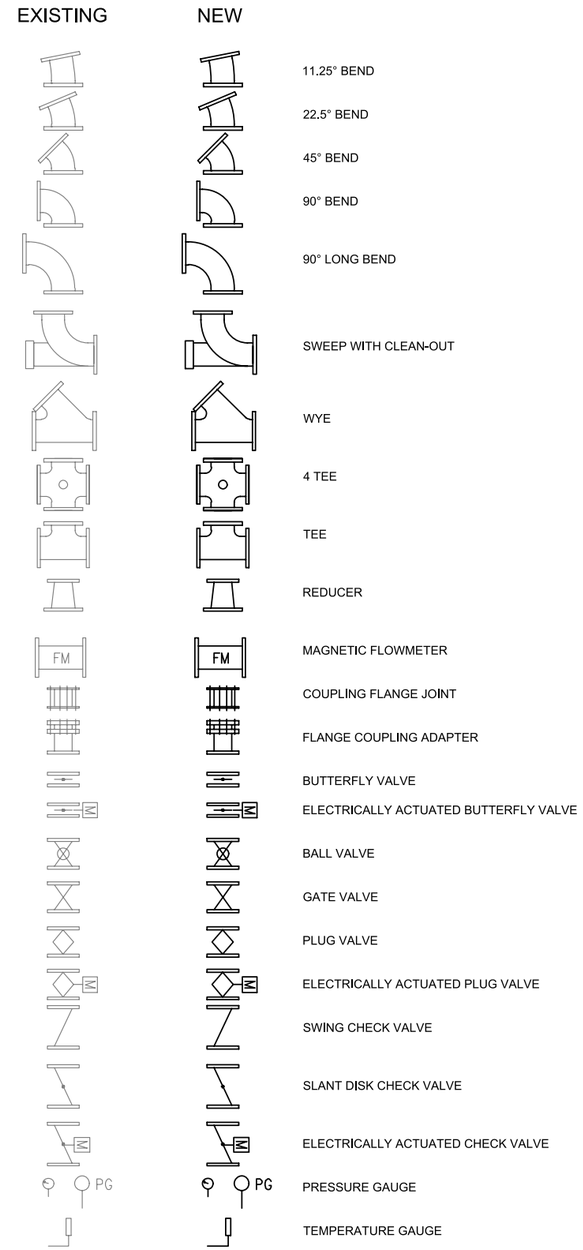

PIPING LEGEND:

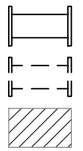

MECHANICAL JOINT PIPING LEGEND:

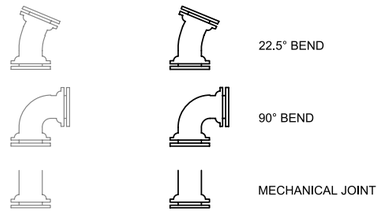

NOTE: THIS IS A MASTER SYMBOLS AND ABBREVIATION DRAWING. NOT ALL SYMBOLS AND ABBREVIATIONS MAY BE USED.

No.	DESCRIPTION	DATE	BY
1	BID SET	5/22/20	RKS
2			
3			
4			
5			
6			
7			

REVISIONS (OR CHANGE NOTICES)

Designed By: AECOM Imagine it. Delivered. One Park Square, 6501 Americas Pkwy NE, Suite 900, Albuquerque, New Mexico 87110, (505)-855-7500

Designed For: CITY OF RIO RANCHO

WASTEWATER TREATMENT PLANT 2 SOLIDS HANDLING IMPROVEMENTS

GENERAL MECHANICAL NOTES, SYMOBLS, AND LEGEND

RIPAN K. SAHA, NEW MEXICO, 24260, WW2030, REGISTERED PROFESSIONAL ENGINEER, 5-22-2020

PROJECT NO.	WW2030
DESIGNED BY:	RKS, REH
DRAWN BY:	CAM
CHECKED BY:	RKS, REH
DATE MODIFIED:	5-22-2020
DPW CHK:	

SHEET: M-1

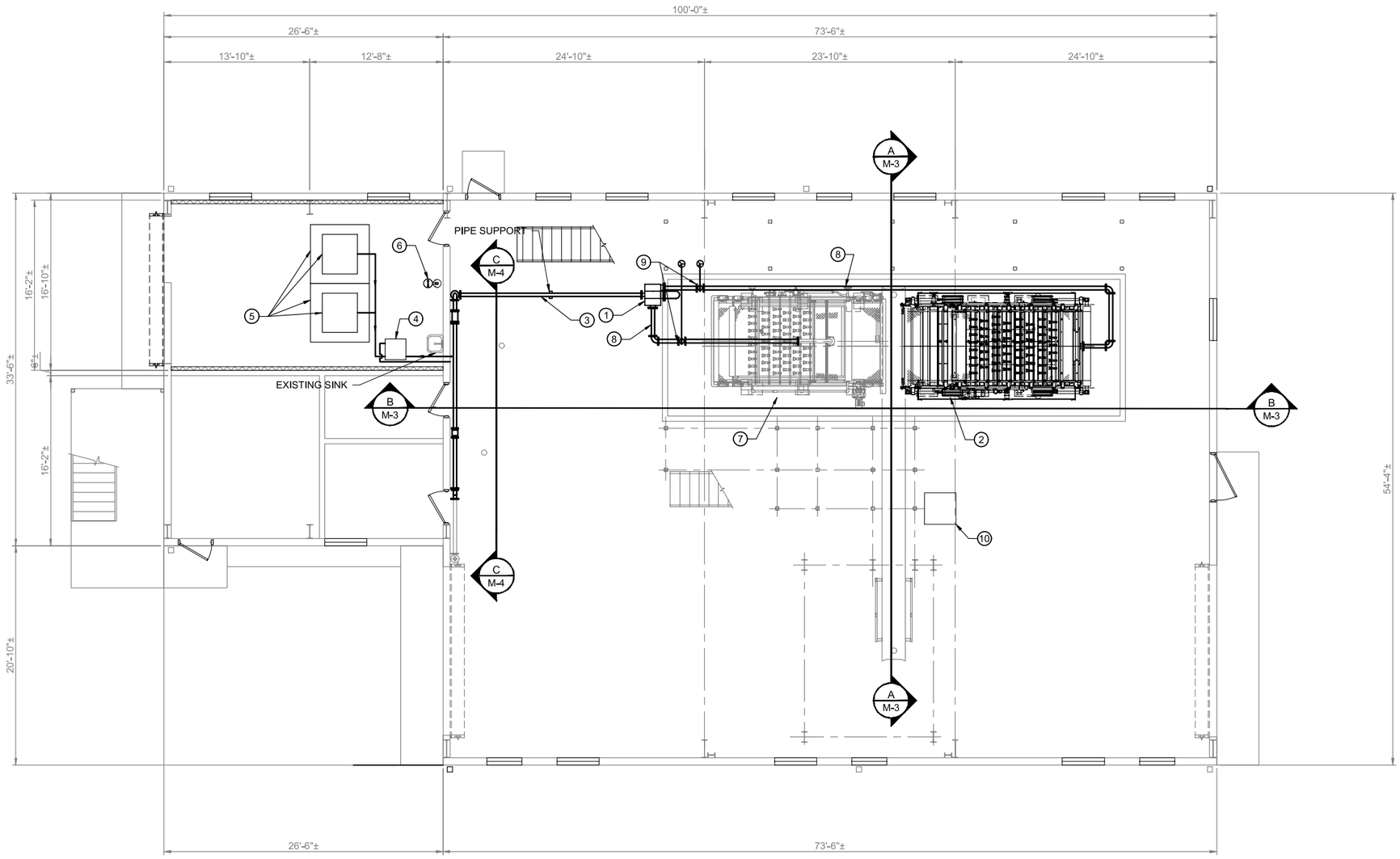

GENERAL NOTES:

1. DIMENSIONS SHOWN MAY VARY FROM ACTUAL CONDITIONS. CONTRACTOR SHALL FIELD VERIFY ALL DIMENSIONS AND ELEVATIONS.
2. ALL PIPE SUPPORTS ARE NOT SHOWN. CONTRACTOR TO PROVIDE PIPE SUPPORTS FOR 6" DIP AS REQUIRED AND SUPPORTED FROM THE BELT PRESS FRAME.

KEYED NOTES ◯

1. NEW FLOW SPLITTER, SEE DETAILS ON SHEET M-6.
2. NEW BELT FILTER PRESS, SEE SECTIONS ON SHEET M-3.
3. NEW 6" DIP SLUDGE FEED PIPE.
4. NEW POLYMER MIXING SYSTEM, SEE SHEET M-5.
5. NEW (2) IBC TOTES AND SPILL PALLETS, SEE SHEET M-5.
6. NEW EYE WASH STATION, SEE SHEET M-6.
7. EXISTING BELT FILTER PRESS TO REMAIN.
8. NEW 6" DIP SLUDGE FEED.
9. NEW 6" PLUG VALVES WITH EXTENDED OPERATOR STEM TO THE PLATFORM. (TYP. 2)
10. AIR COMPRESSOR UNIT FOR NEW BELT PRESS. AIR TUBING TO BE ATTACHED TO THE CONVEYOR BELT COLUMNS.

FIRST FLOOR PLAN
Scale 3/16"=1'-0"

0 4' 8'

No.	DESCRIPTION	DATE	BY
1	BID SET	5/22/20	RKS
2			
3			
4			
5			
6			
7			

REVISIONS (OR CHANGE NOTICES)

Rio Rancho City of Vision

Designed By: AECOM Imagine it. Delivered.
One Park Square
6501 Americas Pkwy NE, Suite 900
Albuquerque, New Mexico 87110
(505)-855-7500

Designed For: CITY OF RIO RANCHO

WASTEWATER TREATMENT PLANT 2 SOLIDS HANDLING IMPROVEMENTS

DEWATERING SYSTEM PLAN

RIPAN K. SAHA — NEW MEXICO — 24280 — PROFESSIONAL ENGINEER — 5-22-2020

PROJECT NO.	WW2030
DESIGNED BY:	RKS, REH
DRAWN BY:	CAM
CHECKED BY:	RKS, REH
DATE MODIFIED:	5-22-2020
DPW CHK:	

SHEET: M-2

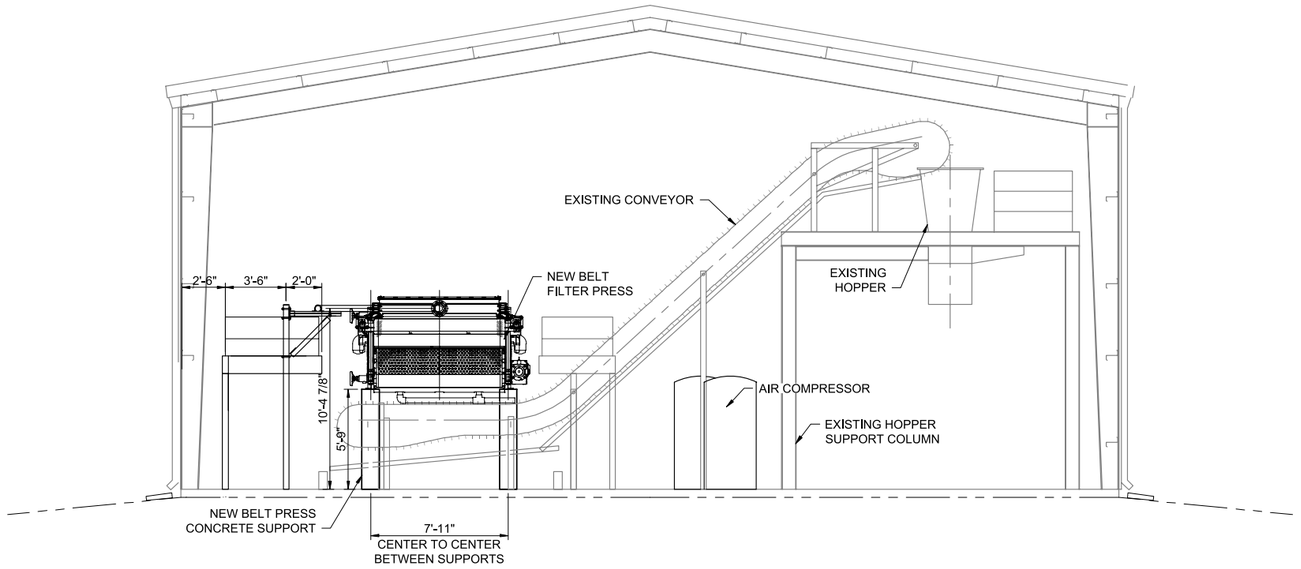

SECTION A-A

Scale 1/4"=1'-0"

GENERAL NOTES:

1. DIMENSIONS ARE BASED ON OWNERS SUPPLIED RECORD DRAWINGS AND MAY VARY FROM ACTUAL CONDITIONS. CONTRACTOR SHALL FIELD VERIFY ALL DIMENSIONS AND ELEVATIONS.
2. ALL PIPE SUPPORTS ARE NOT SHOWN. CONTRACTOR TO PROVIDE PIPE SUPPORTS FOR 6" DIP AS REQUIRED AND SUPPORTED FROM THE BELT PRESS FRAME.
3. ALL BELT PRESS DRAINS SHALL BE EXTENDED WITH SUPPORT, AS REQUIRED, TO 6" ABOVE THE FLOOR.
4. CONTRACTOR SHALL CONFIRM EXISTING BELT PRESS FEED PIPE HEIGHT. SPLITTER BOX OUTLET TO THE EXISTING BELT PRESS SHALL BE INSTALLED AT OR ABOVE THE EXISTING SLUDGE FEED PIPE ELEVATION.

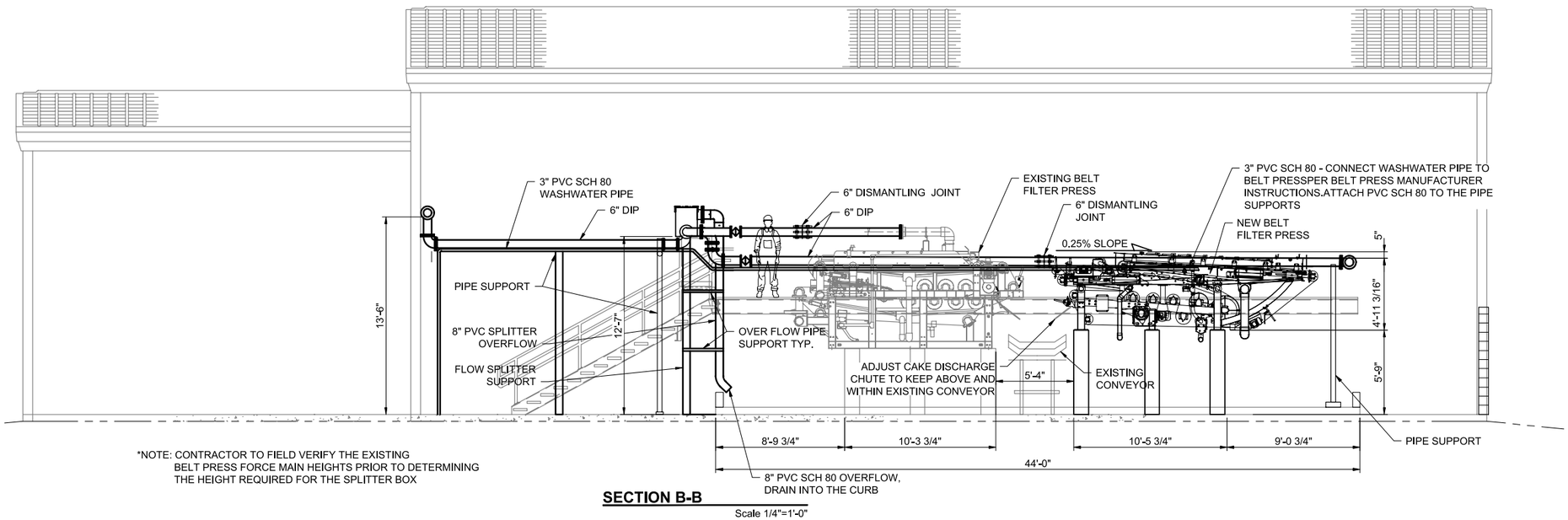

*NOTE: CONTRACTOR TO FIELD VERIFY THE EXISTING BELT PRESS FORCE MAIN HEIGHTS PRIOR TO DETERMINING THE HEIGHT REQUIRED FOR THE SPLITTER BOX

SECTION B-B

Scale 1/4"=1'-0"

No.	DESCRIPTION	DATE	BY
1	BID SET	5/22/20	RKS
2			
3			
4			
5			
6			
7			

REVISIONS (OR CHANGE NOTICES)

Designed By: AECOM Imagine it. Delivered. 6501 America Pkwy NE, Suite 900 Albuquerque, New Mexico 87110 (505)-855-7500

Designed For: CITY OF RIO RANCHO

WASTEWATER TREATMENT PLANT 2 SOLIDS HANDLING IMPROVEMENTS

DEWATERING SYSTEM SECTIONS

RIPAN K. SAHA NEW MEXICO 24280 PROFESSIONAL ENGINEER 5-22-2020

PROJECT NO.	WW2030
DESIGNED BY:	RKS, REH
DRAWN BY:	CAM
CHECKED BY:	RKS, REH
DATE MODIFIED:	5-22-2020
DPW CHK:	

SHEET: M-3

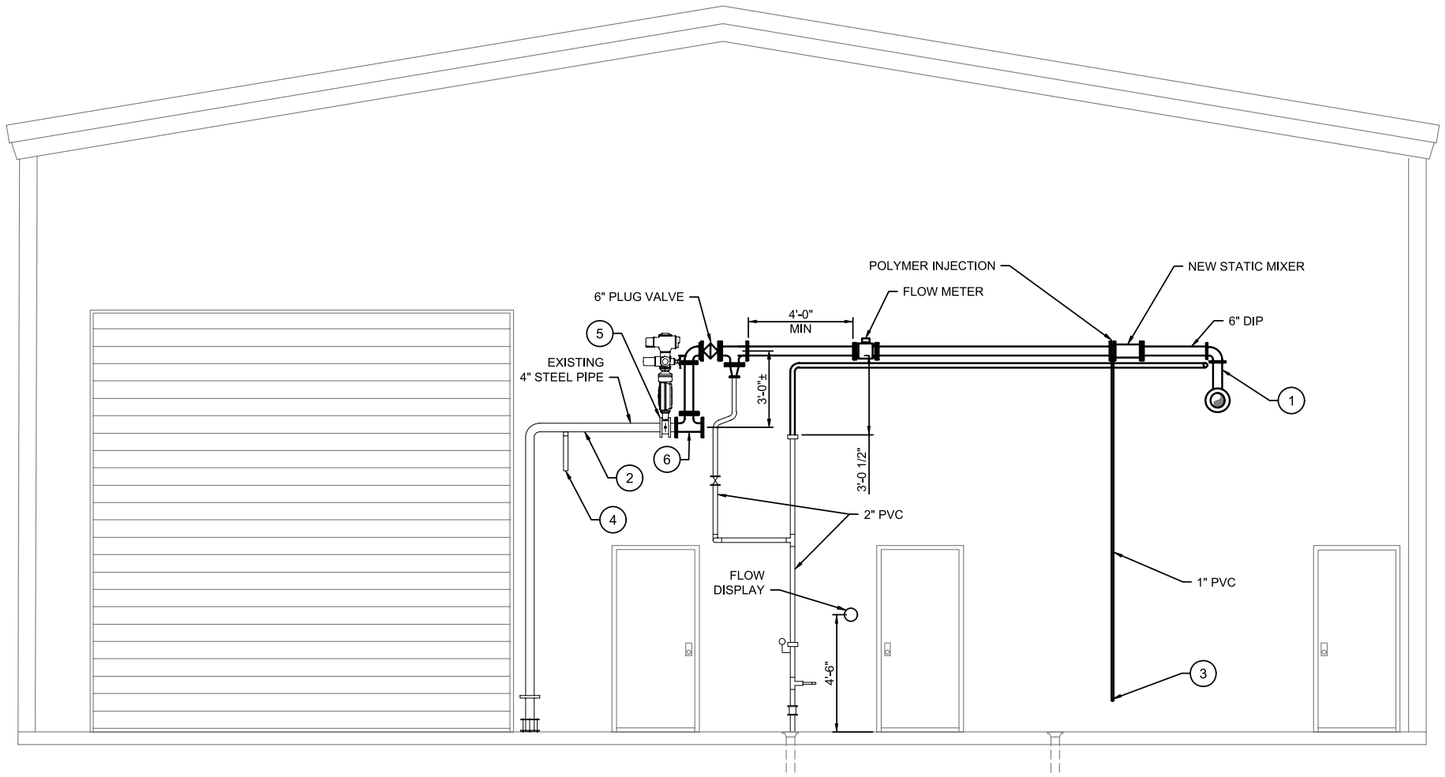

SECTION C-C

Scale 3/8"=1'-0"

GENERAL NOTES:

1. DIMENSIONS SHOWN MAY VARY FROM ACTUAL CONDITIONS. CONTRACTOR SHALL FIELD VERIFY ALL DIMENSIONS AND ELEVATIONS.
2. ALL PIPE SUPPORTS ARE NOT SHOWN. CONTRACTOR TO PROVIDE PIPE SUPPORTS FOR 6" DIP AS REQUIRED AND SUPPORTED FROM THE BELT PRESS FRAME.

KEYED NOTES ◯

1. NEW SLUDGE FEED PIPE. SEE STRUCTURAL DRAWINGS FOR SUPPORT DETAIL AND LOCATIONS.
2. EXISTING SLUDGE FEED PIPE TO REMAIN IN SERVICE UNTIL NEW SLUDGE FEED PIPE IS INSTALLED. CONTRACTOR MUST FIELD VERIFY THE NEW PIPE TO RUN ABOVE THE EXISTING PIPE AND AVOID CONFLICT WITH THE EXISTING PIPES.
3. POLYMER FEED LINE THRU CORE-DRILLED WALL..
4. EXISTING PIPE SUPPORT.
5. EXISTING 6" VALVE AND ACTUATOR TO REMAIN.
6. EXISTING FLOW METER AND PIPE SPOOL TO BE REMOVED AND REPLACE WITH A TEE.

No.	DESCRIPTION	DATE	BY
1	BID SET	5/22/20	RKS
2			
3			
4			
5			
6			
7			

REVISIONS (OR CHANGE NOTICES)

Designed By: AECOM Imagine it. Delivered. 6501 America Pkwy NE, Suite 900 Albuquerque, New Mexico 87110 (505)-855-7500

Designed For: CITY OF RIO RANCHO

WASTEWATER TREATMENT PLANT 2 SOLIDS HANDLING IMPROVEMENTS

DEWATERING SYSTEM SECTIONS

RIPAN K. SAHA NEW MEXICO 24260 PROFESSIONAL ENGINEER 5-22-2020

PROJECT NO.	WW2030
DESIGNED BY:	RKS, REH
DRAWN BY:	CAM
CHECKED BY:	RKS, REH
DATE MODIFIED:	5-22-2020
DPW CHK:	

SHEET: M-4

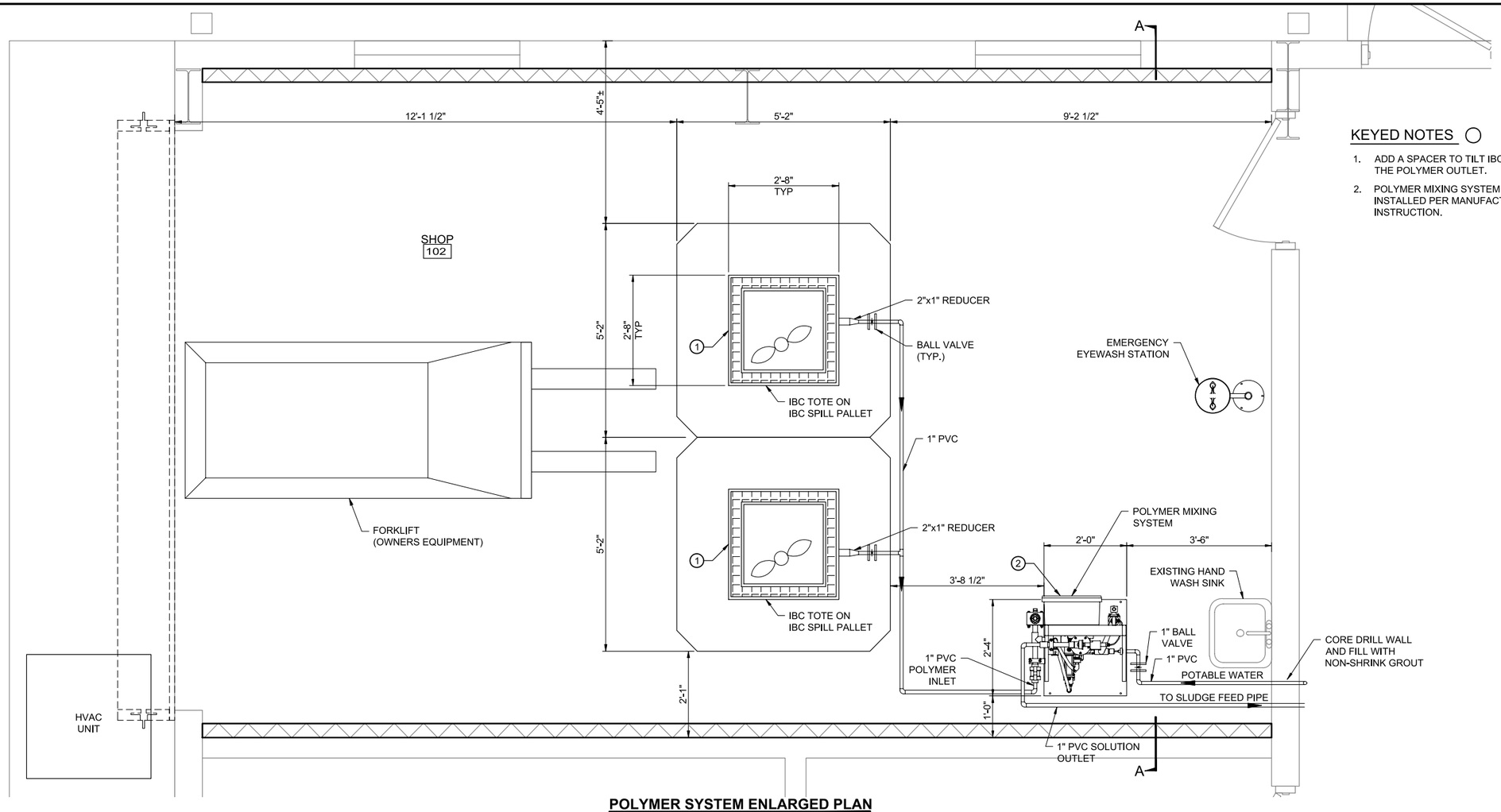

KEYED NOTES

1. ADD A SPACER TO TILT IBC TOTES TOWARDS THE POLYMER OUTLET.
2. POLYMER MIXING SYSTEM SHALL BE INSTALLED PER MANUFACTURERS INSTRUCTION.

POLYMER SYSTEM ENLARGED PLAN
Scale 3/4"=1'-0"

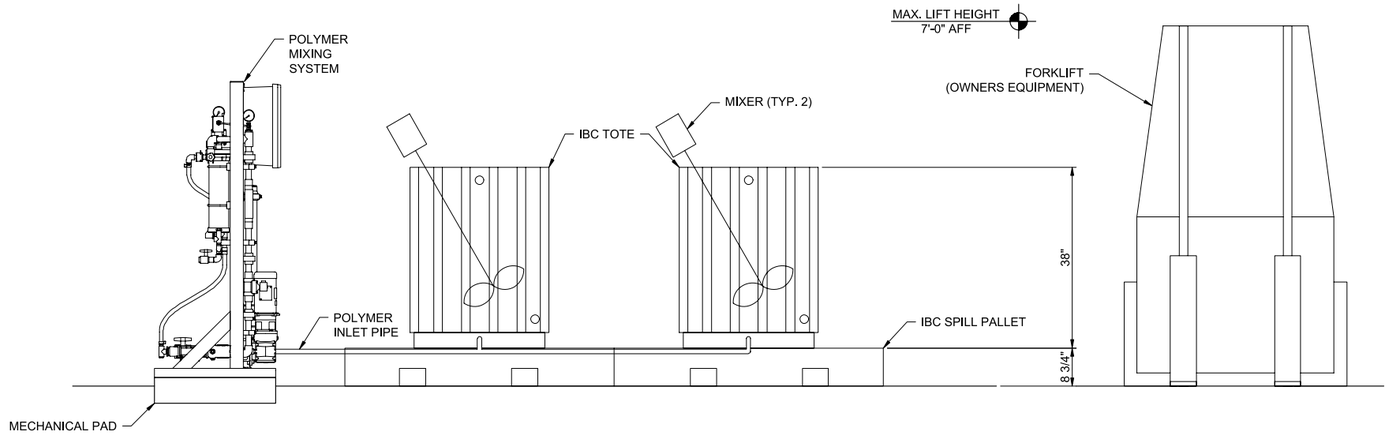

POLYMER SYSTEM ELEVATION A-A
Scale 3/4"=1'-0"

No.	DESCRIPTION	DATE	BY
1	BID SET	5/22/20	RKS

REVISIONS (OR CHANGE NOTICES)

Designed By: AECOM Imagine it. Delivered. One Park Square, 6501 Americas Pkwy NE, Suite 900, Albuquerque, New Mexico 87110, (505)-855-7500

Designed For: CITY OF RIO RANCHO

WASTEWATER TREATMENT PLANT 2 SOLIDS HANDLING IMPROVEMENTS

NEW POLYMER SYSTEM

RIPAN K. SAHA, NEW MEXICO, 24260, PROFESSIONAL ENGINEER, 5-22-2020

PROJECT NO.	WW2030
DESIGNED BY:	RKS, REH
DRAWN BY:	CAM
CHECKED BY:	RKS, REH
DATE MODIFIED:	5-22-2020
DPW CHK:	

SHEET: M-5

*NOTE: ALL STAINLESS STEEL SHALL BE 304 SS AND SHOP WELDED WITH PICKLING AND PASSIVATION

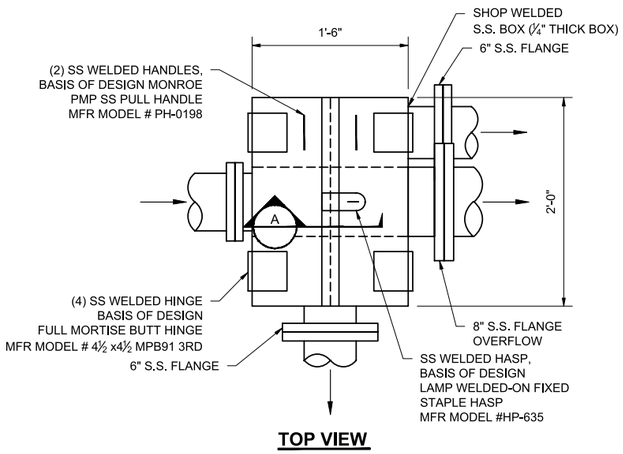

TOP VIEW

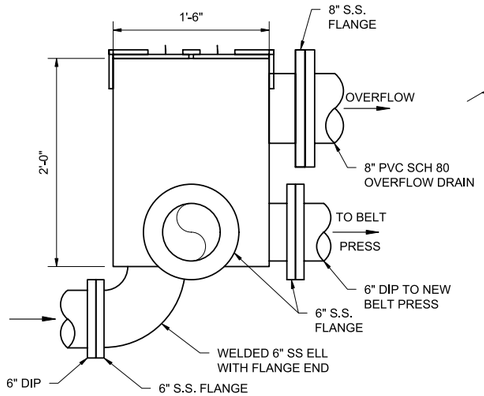

SIDE VIEW

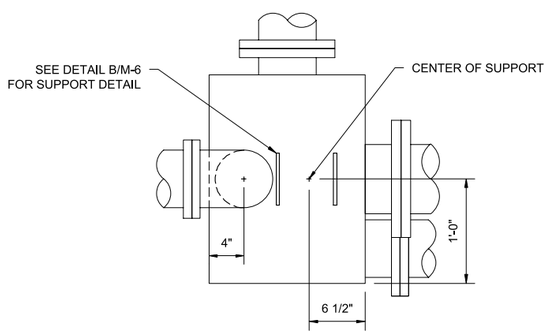

BOTTOM VIEW

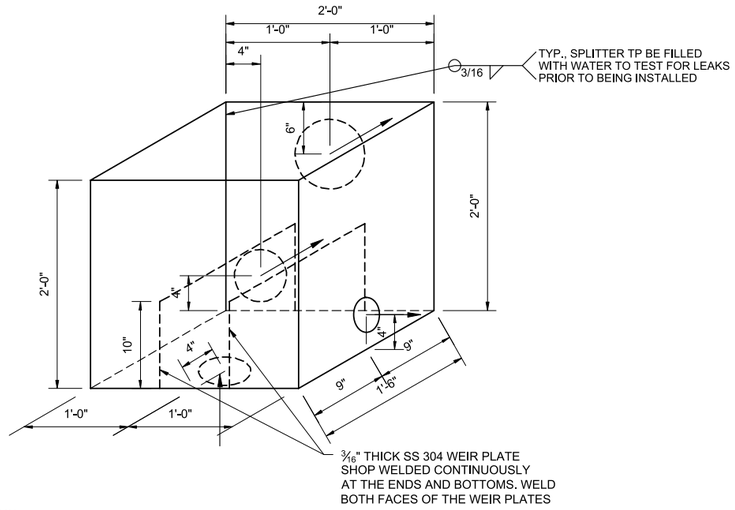

ISOMETRIC VIEW

* TOP DOORS NOT SHOWN FOR CLARITY

1 | FLOW SPLITTER BOX DETAILS
Scale 1 1/2"=1'-0"

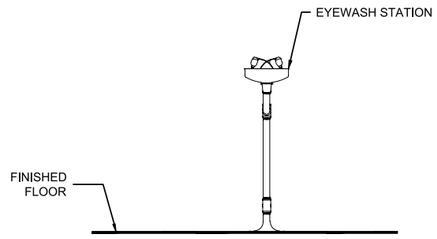

2 | EYEWASH DETAIL
Scale NTS

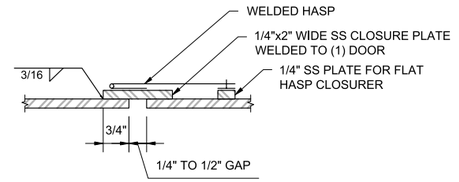

A | DOOR SECTION
Scale 6"=1'-0"

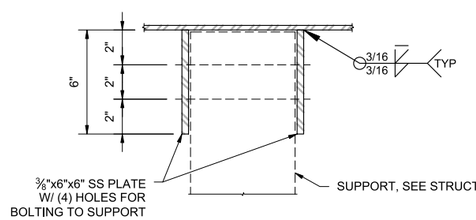

B | SUPPORT DETAIL
Scale 3"=1'-0"

No.	DESCRIPTION	DATE	BY
1	BID SET	5/22/20	RKS
2			
3			
4			
5			
6			
7			

REVISIONS (OR CHANGE NOTICES)

Designed By: AECOM Imagine it. Delivered. 6501 Americas Pkwy NE, Suite 900 Albuquerque, New Mexico 87110 (505)-855-7500

Designed For: CITY OF RIO RANCHO

WASTEWATER TREATMENT PLANT 2 SOLIDS HANDLING IMPROVEMENTS

TYPICAL DETAILS

RIPAN K. SAHA NEW MEXICO 24280 PROFESSIONAL ENGINEER 5-22-2020

PROJECT NO.	WW2030
DESIGNED BY:	RKS, REH
DRAWN BY:	CAM
CHECKED BY:	RKS, REH
DATE MODIFIED:	5-22-2020
DPW CHK:	

SHEET: M-6

DWG: L:\605\0176 Rio Rancho - Solids Dewatering Design\400 - CAD\401 - CAD\Arc-CAD\SHEETS\M-6.dwg USER: jesse.higgins
DATE: May 22, 2020 11:08am XREFS: M-6_Detailed_Base_Xoutdl.dwg
PLOTS: 36X24 Full Bleed D MASS: In-ch/Air-ch 1808

GENERAL NOTES

1. THE DRAWINGS AND SPECIFICATIONS REPRESENT THE FINISHED PROJECT. UNLESS OTHERWISE NOTED, THEY DO NOT INDICATE THE METHOD OF CONSTRUCTION. THE CONTRACTOR SHALL SUPERVISE AND DIRECT THE WORK AND HE SHALL BE SOLELY RESPONSIBLE FOR ALL CONSTRUCTION MEANS, METHODS TECHNIQUES, SEQUENCES AND PROCEDURES IN ACCORDANCE WITH GENERALLY ACCEPTED CONSTRUCTION PRACTICES.
2. BEFORE PERFORMING MECHANICAL WORK, THE CONTRACTOR SHALL BE FULLY ACQUAINTED WITH THE JOB CONDITIONS AFFECTING THE DEMOLITION AND INSTALLATION WORK COVERED BY THE NOTES AND ASSOCIATED DRAWINGS AND SPECIFICATIONS.
3. CONTRACTOR SHALL COORDINATE WORK BETWEEN ALL TRADES AND WORKMEN TO CLOSE, PATCH AND REPAIR ALL HOLES WHERE ITEMS ARE REMOVED AND PROVIDE OPENINGS AS NECESSARY FOR NEW WORK. FIRE SEAL OPENINGS AS REQUIRED.
4. DO NOT SCALE DRAWINGS, SITE CONDITIONS SHALL PREVAIL. DIMENSIONS INDICATED ARE FOR PRICING PURPOSES ONLY. ALL DIMENSIONS SHALL BE VERIFIED IN THE FIELD TO ENSURE PRECISE FIT.
5. CONTRACTOR SHALL SUBMIT THE WORKING SCHEDULE.
6. PROVIDE FIRE PENETRATION SEALS & SUPPORTS AS REQUIRED FOR EQUIPMENT & RACEWAYS. INSTALL PER NFPA AND SMACNA REQUIREMENTS.
7. ALL DIMENSIONS SHALL HAVE PRECEDENCE OVER SCALE.
8. ALL DUCTS AND PIPING LAYOUTS SHOWN ON DRAWINGS ARE DIAGRAMMATIC & SHALL BE ROUTED TO AVOID INTERFERENCE WITH EXISTING BUILDING STRUCTURE & SYSTEMS.
9. ALL DUCT SIZES INDICATED ON THE DRAWINGS ARE INCHES AND NET INSIDE, WITHOUT INSULATION.
10. MANUAL VOLUME DAMPERS SHALL BE PROVIDED IN ALL DUCT BRANCHES UNLESS NOTED OTHERWISE.
11. ALL EQUIPMENT SUPPORTS AND PENETRATIONS SHALL BE VERIFIED AND ADAPTED AS REQUIRED FOR SIZE AND FIT WITH ACTUAL PURCHASED EQUIPMENT. THE EQUIPMENT SPACES, SERVICE ACCESS AND OTHER RELATED FEATURES INDICATED ON THE DRAWING WERE SELECTED FOR ENGINEERING DESIGN AND SPACE ALLOCATION PURPOSES. THE ACTUAL REQUIREMENTS FOR THE ABOVE DESIGN ACCOMMODATIONS MAY VARY DEPENDING ON THE PURCHASED EQUIPMENT TO BE INSTALLED. MAKE SUCH CHANGES WITHOUT COST TO THE OWNER AS MAY BE REQUIRED FOR THE EQUIPMENT APPROVED TO BE FURNISHED IF DIFFERENT THAN SHOWN ON THE DRAWINGS. NEW CONCRETE PAD SHALL BE TRIMMED AROUND EXISTING FLOOR DRAINS OR FLOOR SINKS.
12. IMMEDIATELY REPORT TO THE OWNER ANY OBSERVATIONS OF EXISTING CONDITIONS WHICH ARE DISCOVERED IN THE BUILDING AND WHICH MAY INTERFERE WITH THE CORRECT INSTALLATION OF THE SYSTEM.
13. THE CONTROLS SHOWN ON THE DRAWINGS ARE SCHEMATIC REPRESENTATIONS ONLY. ALL ADDITIONAL CONTROL ITEMS NECESSARY TO SATISFY THE FUNCTIONAL REQUIREMENTS OF THE OPERATION AND SPECIFICATIONS SHALL BE PROVIDED AS PART OF THE WORK. THE SYSTEM SHALL BE COMPLETE IN ALL RESPECTS; TESTED FOR MEETING THE PERFORMANCE REQUIREMENTS, COMMISSIONED INTO OPERATION AND CALIBRATED UNDER OPERATING CONDITIONS.
14. THE CONTRACTOR SHALL BE RESPONSIBLE FOR THE SAFETY OF WORK AREA DURING CONSTRUCTION PERIOD. THE CONTRACTOR SHALL PROVIDE ALL SHORING AND BRACING NECESSARY TO INSURE STABILITY OF THE EXISTING STRUCTURES AND NEW WORK. THE CONTRACTOR SHALL PROTECT ADJACENT PROPERTIES AND UTILITIES IN ACCORDANCE WITH ALL NATIONAL, STATE AND LOCAL SAFETY ORDINANCE.
15. CONTRACTOR IS TO PROVIDE NECESSARY PIPE REDUCERS IF EQUIPMENT CONNECTION SIZE IS DIFFERENT FROM LINE SIZE SHOWN ON DRAWING.
16. DESIGN, INSTALLATION, SUPPLY ADEQUACY AND SAFETY OF REQUIRED BRACING AND TEMPORARY SUPPORTS IS THE RESPONSIBILITY OF THE CONTRACTOR.
17. SOME SYMBOLS AND ABBREVIATIONS SHOWN ON THIS SHEET ARE NOT BEING USED.
18. ALL 90° MITERED ELL'S SHALL HAVE DOUBLE THICKNESS TURNING VANES UNLESS NOTED OTHERWISE.
19. TEMPERATURE SENSORS SHALL BE MOUNTED AT 48 INCHES ABOVE FINISHED FLOOR, UNLESS NOTED OTHERWISE.
20. VALVES LOCATED OVER 6'-0" AFF SHALL BE PROVIDED WITH CHAIN OPERATORS.
21. PROVIDE HIGH POINT VENTS AND LOW POINT DRAINS ON ALL PIPING.
22. CONTRACTOR SHALL NOT RUN CONDENSER WATER, HEATING HOT WATER, OR PLUMBING PIPES ABOVE ELECTRICAL EQUIPMENT.
23. PROVIDE SHUT-OFF VALVES ON ALL CHILLED AND HEATING HOT WATER BRANCH TAKE-OFFS.
24. ALL PIPES INSTALLED INSIDE THE MECHANICAL AREA, BOILER, FAN ROOMS, SHALL BE SUPPORTED WITH SPRING ISOLATORS.
25. ALL SEISMIC BRACING SHALL BE IN ACCORDANCE WITH "GUIDELINES FOR SEISMIC RESTRAINTS OF MECHANICAL SYSTEM" BY SMACNA.
26. ALL VALVES, TRAP PRIMERS, OR OTHER EQUIPMENT SHOWN IN WALLS OR ABOVE NON-ACCESSIBLE CEILINGS SHALL BE INSTALLED WITH ACCESS PANEL.
27. ALL PIPE PENETRATIONS THROUGH FIRE WALLS OR FLOORS SHALL BE FIRE STOPPED USING U.L. LISTED SYSTEM.
28. CONTRACTOR SHALL PATCH AND REPAIR ALL OPENINGS IN WALLS RESULTING FROM REMOVAL OF DUCTS, PIPES, FIXTURES, EQUIPMENT OR RELATED WORK TO MATCH EXISTING ADJACENT SURFACES.
29. ALL NEW CONSTRUCTION SHALL MATCH EXISTING ADJACENT SURFACES UNLESS NOTED OTHERWISE. ALL EXISTING CONSTRUCTION MARRED, DISTURBED OR DAMAGED BY NEW CONSTRUCTION SHALL BE REFINISHED TO MATCH EXISTING AT CONTRACTOR'S EXPENSE.
30. ALL CHILLED WATER COOLING EQUIPMENT SHALL BE SUITABLE FOR OPERATING PRESSURE OF 150 PSIG UNLESS NOTED OTHERWISE.
31. PORTION OF EXISTING CEILING GRID/T-BAR AND TILE WILL BE TEMPORARILY REMOVED & REINSTALLED TO PROVIDE ACCESS TO VAV, DUCTWORK & PIPING DURING CONSTRUCTION. LIGHTING & OTHER CEILING MOUNTED FIXTURES SHALL REMAIN IN-PLACE UNO. CEILING ASSEMBLY SHALL BE COMPLETELY RESTORED PRIOR TO COMPLETION OF EACH PHASE. IF T-BAR OR TILES ARE BENT, CRACKED, SCRATCHED, CHIPPED OR OTHERWISE DAMAGED, THE CONTRACTOR SHALL REPLACE AT NO COST TO THE OWNER.
32. CONTRACTOR SHALL NOT OPERATE ANY UTILITIES INCLUDING CHILLED & HEATING HOT WATER & FIRE SPRINKLER SYSTEMS WITHOUT OWNER'S PRIOR PERMISSION INCLUDING OPENING & CLOSING VALVES & SWITCHES, ETC.
33. DURING CONSTRUCTION, REMOVAL OF EXISTING EQUIPMENT SHALL BE HANDLED BY A CERTIFIED TECHNICIAN. REFRIGERANTS SHALL NOT BE RELEASED INTO THE ENVIRONMENT. REFRIGERANT MUST BE RECOVERED PROPERLY IN AN EPA CERTIFIED RECOVERY UNIT. THE AIR CONDITIONING UNITS SHALL BE LABELED TO DEMONSTRATE THE REFRIGERANT HAS BEEN PREVIOUSLY RECOVERED.
34. CONTRACTOR SHALL PROPERLY DISPOSE OF ALL REMOVED EQUIPMENT, PIPING AND ALL OTHER MATERIAL.
35. THE CONTRACTOR SHALL BE RESPONSIBLE TO PROPERLY CLEAN ALL EXISTING RETURN/EXHAUST DUCTWORK WHICH WILL BE RE-USED AFTER THIS REMODEL WORK.
36. FLEXIBLE DUCT MAXIMUM LENGTH SHALL NOT EXCEED 7'-0".
37. CONTRACTOR SHALL CAREFULLY EXAMINE THE EXISTING STRUCTURAL ELEMENTS TO AVOID CUTTING INTO ANY EXISTING RE-BARS OR CABLES PRIOR TO START CORE DRILLING OF SLAB.
38. TEMPERATURE SENSORS SHALL BE MOUNTED AT 48 INCHES ABOVE FINISHED FLOOR, UNLESS NOTED OTHERWISE.
39. MANUAL VOLUME DAMPERS SHALL BE PROVIDED IN ALL DUCT BRANCHES UNLESS NOTED OTHERWISE. MANUAL VOLUME DAMPERS INSTALLED IN THE GYPSUM BOARD CEILING AREA SHALL BE PROVIDED WITH CONCEALED REGULATOR, SEE MOUNTING DETAIL SHOWN ON SHEET M5.1.
40. A CERTIFIED AIR BALANCE REPORT AND OUTSIDE AIR CERTIFICATION SHALL BE SUBMITTED TO OWNER & ENGINEER TO REVIEW PRIOR TO OCCUPANCY. THE TEST AND BALANCE AGENCY SHALL BE CERTIFIED BY AABC OR NEBB OR EQUAL.
41. CONTRACTOR IS TO PROVIDE NECESSARY PIPE REDUCERS IF EQUIPMENT CONNECTION SIZE IS DIFFERENT FROM LINE SIZE SHOWN ON DRAWING.
42. AIR CONDITIONING DUCTWORK SHALL BE CONSTRUCTED, INSTALLED, INSULATED, AND SEALED IN ACCORDANCE WITH SECTIONS 601.1, 603, AND 604 OF THE STATE MECHANICAL CODE.
43. INSULATION MATERIAL SHALL MEET THE CALIFORNIA QUALITY STANDARD PER SECTION 118 OF THE ENERGY EFFICIENCY STANDARDS.
44. DOORS AND WINDOWS SHALL MEET THE MINIMUM INFILTRATION REQUIREMENTS PER SECTION 116 OF THE ENERGY EFFICIENCY STANDARDS.
45. ALL INSULATION MATERIAL EXPOSED WITHIN THE PLENUM SHALL COMPLY WITH CMC SECTION 604.
46. ALL MATERIAL EXPOSED WITHIN THE CEILING PLENUM SPACE SHALL NOT HAVE A FLAME SPREAD INDEX OF NOT MORE THAN 25 AND A SMOKE DEVELOPED RATING OF NOT MORE THAN 50.
47. DUCTWORK AND PIPE ROUTING AS SHOWN ON DRAWINGS IS DIAGRAMMATIC AND IS NOT TO BE SCALED. WHERE ALTERNATE ROUTING, OFFSETS AND TRANSITIONS ARE REQUIRED FOR COORDINATION OF WORK, THIS CONTRACTOR SHALL MAKE CHANGES WITHOUT ADDITIONAL COSTS.
48. THIS CONTRACTOR SHALL USE SMACNA DUCT CONSTRUCTION STANDARDS FOR SHEET METAL DUCTS. ALL HIGH PRESSURE DUCTWORK UPSTREAM OF VAV TERMINAL BOXES SHALL BE CONSTRUCTED FOR 2" W.C. STATIC PRESSURE, SEAL CLASS "A". ALL OTHER DUCTWORK (UNLESS OTHERWISE NOTED ON FLOOR PLANS) SHALL BE CONSTRUCTED OF 1" W.C. SEAL CLASS "B".
49. ALL MECHANICAL SYSTEMS SHALL BE INSTALLED IN ACCORDANCE WITH THE CURRENT ADOPTED EDITION OF THE BUILDING CODES, FIRE CODES, MECHANICAL CODES AND PLUMBING CODES.
50. THIS CONTRACTOR SHALL PROVIDE SUBMITTALS ON ITEMS LISTED IN MECHANICAL EQUIPMENT LIST TO THE ENGINEER FOR REVIEW PRIOR TO THE ORDER, PURCHASE OR INSTALLATION.
51. ALL VAV BOXES, WATER FLOW RATES AND DIFFUSERS MUST BE BALANCED TO THE VALVES INDICATED ON THE FLOOR PLANS. PROVIDE BALANCE REPORT TO ENGINEER PRIOR TO PROJECT CLOSEOUT.
52. DUCT DIMENSIONS SHOWN ARE INSIDE CLEAR DIMENSIONS.
53. MECHANICAL CONTRACTOR IS TO COORDINATE WITH ELECTRICAL ON SIZE/QUANTITY OF MOTORIZED DAMPERS. I. E. FIRE/SMOKE DAMPERS, FIRE DAMPERS, MOTORIZED DAMPERS, ETC. . .
54. EACH TRADE IS RESPONSIBLE THEIR OWN FIRE CAULKING.
55. DIVISION 15 MUST PROVIDE AND INSTALL ALL ACCESS DOORS FOR FCU's, VALVES, FLOW METERS, ETC. COORDINATE LOCATION WITH GENERAL CONTRACTOR.
56. HOUSEKEEPING PADS FOR ALL EQUIPMENT IS PROVIDED AND INSTALLED BY GENERAL CONTRACTOR. COORDINATE LOCATION WITH MECHANICAL CONTRACTOR.

    ALL TAKE-OFF'S (LOW PRESSURE) DOWNSTREAM OF THE VAV BOX SHALL BE HIGH EFFICIENCY TAKE-OFF'S (HET's).
58. ALL RETURN AIR GRILLES SHALL HAVE SOUND BOOTS W/ LINED INSULATION. INSULATION IS TO BE PAINTED FLAT BLACK.
59. DIVISION 15 TO SUBMIT TO ENGINEER ALL AS-BUILDS OF BUILDINGS MECHANCIAL AND PLUMBING SYSTEMS PRIOR TO JOB COMPLETION AND FINAL PAYMENT.
60. ALL VFD'S ARE TO BE PROVIDED AND WIRED UP BY ELECTRICAL CONTRACTOR AND INSTALLED BY THE MECHANICAL CONTRACTOR.
61. ALL EXPOSED PIPING IS TO BE INSULATED AND WEATHERPROOFED. SEE SPEC SECTION 15080.
62. ALL SECURITY FASTENING DEVICES SHALL BE THE CENTER PIN REJECTION TYPE. REFER TO ARCHITECTURAL SPECIFICATIONS.

ABBREVIATIONS

AAV	AUTOMATIC AIR VENT	CWP	CONDENSER WATER PUMP	FS	FLOOR SINK	MISC	MISCELLANEOUS	SCHR	SECONDARY CHILLED WATER RETURN
ABV	ABOVE	CWR	CONDENSER WATER RETURN	FT	FOOT / FEET	MTD	MOUNTED	SCHS	SECONDARY CHILLED WATER SUPPLY
AC	AIR CONDITIONING	CWS	CONDENSER WATER SUPPLY	FV	FACE VELOCITY	MTG	MOUNTING	SECT	SECTION
AFF	ABOVE FINISH FLOOR	DB	DRY BULB	GA	GAUGE	MVD	MANUALLY OPERATED VOLUME DAMPER	SHT	SHEET
APPROX	APPROXIMATE	DDC	DIRECT DIGITAL CONTROL	GAL	GALLON	NC	NORMALLY CLOSED	SMS	SHEET METAL SCREW
ARCH	ARCHITECTURAL	DET	DETAIL	GALV	GALVANIZED	NO	NORMALLY OPEN	SOV	SHUT OFF VALVE
AS	AIR SEPARATOR	DIA	DIAMETER	GPM	GALLONS PER MINUTE	NTS	NOT TO SCALE	SP	STATIC PRESSURE
@	AT	DET	DETAIL	HGT	HEIGHT	OSA	OUTSIDE AIR	SPECS	SPECIFICATIONS
&	AND	DN	DOWN	HORIZ	HORIZONTAL	PD	PRESSURE DROP	SQ	SQUARE
AUTO	AUTOMATIC	DTR	DOWN THRU ROOF	HP	HORSEPOWER	POC	POINT OF CONNECTION	SS	STAINLESS STEEL
B	BOILER	DWG	DRAWING	HR	HOUR	POD	POINT OF DISCONNECTION	STD	STANDARD
BEL	BELOW	(E)	EXISTING	HVAC	HEATING, VENTILATING AND AIR CONDITIONING	POS	POSITIVE	STRUCT	STRUCTURAL
BFV	BUTTERFLY VALVE	EA	EACH / EXHAUST AIR	HWP	HEATING HOT WATER PUMP	PRESS	PRESSURE	SW	SWITCH
BHP	BRAKE HORSEPOWER	EF	EXHAUST FAN	HZ	HERTZ	PSI	POUNDS PER SQUARE INCH	TEFC	TOTALLY ENCLOSED FAN COOLED
BLDG	BUILDING	EL	ELEVATION	ID	INSIDE DIAMETER	PSIA	POUNDS PER SQUARE INCH ABSOLUTE	TEMP	TEMPERATURE
BOP	BOTTOM OF PIPE	ELEC	ELECTRICAL	IN	INCH / INCHES	PSIG	POUNDS PER SQUARE INCH GAUGE	TOS	TOP OF STEEL
BTUH	BRITISH THERMAL UNITS PER HOUR	ENT	ENTERING	IN WG	INCHES WATER GAUGE	RA	RETURN AIR	TYP	TYPICAL
CFM	CUBIC FEET PER MINUTE	EQUIP	EQUIPMENT	KW	KILOWATT	REF	REFERENCE	UON	UNLESS OTHERWISE NOTED
CH	CHILLER	ET	EXPANSION TANK	LB	POUND	REQD	REQUIRED	UTR	UP THROUGH ROOF VENT
CHP	CHILLED WATER PUMP	°F	DEGREES FAHRENHEIT	LRA	LOCKED ROTOR AMPERES	RET	RETURN	VFD	VARIABLE FREQUENCY DRIVE
CONC	CONCRETE	FD	FIRE DAMPER	LVG	LEAVING	RH	RIGHT HAND	VERT	VERTICAL
CONN	CONNECTION	FIN	FINISHED	MAX	MAXIMUM	RLA	RATED LOAD AMPERES	W/	WITH
CONT	CONTINUATION	FLEX	FLEXIBLE	MCC	MOTOR CONTROL CENTER	RM	ROOM	WB	WET BULB
CT	COOLING TOWER	FLR	FLOOR	MD	MOTORIZED DAMPER	RPM	REVOLUTIONS PER MINUTE	WT	WEIGHT
CPF	CHEMICAL POT FEEDER	FPM	FEET PER MINUTE	MECH	MECHANICAL	SA	SUPPLY AIR	WMS	WIRE MESH SCREEN
CTF	COOLING TOWER FILTER	FSD	FIRE SMOKE DAMPER	MIN	MINIMUM	SCBA	SELF CONTAINED BREATHING APPARATUS		

DUCTWORK LEGEND

DOUBLE LINE	SYMBOL SINGLE LINE	DESCRIPTION
20x12	20x12	DUCTWORK(FIRST FIGURE IS SIZE OF SIDE IN VIEW) SIZE SHOWN ARE IN INCHES UON
20x12*	20x12(L)*	LINED DUCTWORK(DIMENSION SHOWN IS NET CLEAR INSIDE) SIZE SHOWN ARE IN INCHES UON

* LINING IS NOT SHOWN AS SYMBOL, WHERE IT IS SPECIFICALLY CALLED OUT AS LINED DUCT OR REFERRED TO DETAIL INDICATING DUCT LINING

- DUCT RISE IN DIRECTION OF FLOW
- DUCT DROP IN DIRECTION OF FLOW
- FLEXIBLE CONNECTION
- CURVED ELBOW MIN R = 1.5 WIDTH
- 90 °ELBOW WITH TURNING VANE
- BRANCH TAKE- OFF
- ACCESS PANEL OR DOOR
- MANUAL VOLUME DAMPER
- MANUAL VOLUME DAMPER W/ CONCEALED REGULATOR
- FIRE SMOKE DAMPER WITH DUCT DETECTOR AND HINGED ACCESS PANEL
- FIRE DAMPER W/ HINGED ACCESS PANEL
- MOTORIZED DAMPER
- SECURITY BARRIER (MANBARS)
- FLEXIBLE ROUND DUCT
- SUPPLY AIR OR OUTSIDE AIR DUCT IN SECTION
- RETURN AIR DUCT IN SECTION
- EXHAUST AIR DUCT IN SECTION
- ROUND SUPPLY DIFFUSER
- SQUARE CEILING DIFFUSER/SUPPLY REGISTER (NUMBER OF ARROWS SHOWN DETERMINES TYPE: 4-WAY, 3-WAY, 2-WAY)
- RETURN REGISTER
- EXHAUST REGISTER
- TRANSITION: RECTANGULAR TO ROUND
- DUCT OR EQUIPMENT SMOKE DETECTOR W/DUCT ACCESS PANEL
- SUPPLY REGISTER OR SUPPLY GRILLE
- RETURN REGISTER OR RETURN GRILLE
- EXHAUST REGISTER OR EXHAUST GRILLE
- BACKDRAFT DAMPER
- MANBARS
- POINT OF DISCONNECTION OR CONNECTION
- HD HYDROGEN GAS DETECTOR
- CO2 CO2 GAS DETECTOR
- CO CO GAS DETECTOR
- IAQ INDOOR AIR QUALITY SENSOR
- SP STATIC PRESSURE TRANSMITTER

VALVES AND PIPELINE SYMBOLS

- LEVEL CONTROL VALVE / FLOAT VALVE
- PRESSURE CONTROL VALVE (SELF CONTAINED)
- PRESSURE OR SAFETY VALVE
- MOTOR OPERATED BUTTERFLY VALVE
- SOLENOID OPERATED VALVE
- BUTTERFLY VALVE EXPANSION JOINT
- CIRCUIT SETTER
- SOLENOID OPERATOR
- CWS — CONDENSER WATER SUPPLY
- CWR — CONDENSER WATER RETURN
- HWS — HEATING HOT WATER SUPPLY
- HWR — HEATING HOT WATER RETURN
- CHS — CHILLED WATER SUPPLY
- CHR — CHILLED WATER RETURN
- D — DRAIN
- 3 – WAY CONTROL VALVE
- 2-WAY CONTROL VALVE
- FLOW DIRECTION
- GATE VALVE
- BALL VALVE
- GLOBE VALVE
- STRAINER WITH COCK
- CHECK VALVE
- BUTTERFLY VALVE (DIAGRAMS)
- BUTTERFLY VALVE (PLANS & ELEVS)
- ANGLE VALVE
- WELD CAP
- SCREW CAP
- FLANGE CONNECTION'
- UNION
- ANCHOR
- SLOPE DOWN IN DIRECTION OF ARROW
- TEE DOWN
- TEE UP
- ELBOW DOWN
- ELBOW UP
- BRANCH CONNECTION UP
- BRANCH CONNECTION DOWN
- BRANCH CONNECTION OUT OF SIDE
- AUTOMATIC AIR VENT with GATE VALVE (PLAN)
- FS / FD — FLOOR SINK / DRAIN
- BALANCING COCK
- TRIPLE DUTY VALVE
- MOTORIZED CONTROL VALVE
- PRESSURE GAUGE
- THERMOMETER

EQUIPMENT LEGEND

SYMBOL	DESCRIPTION
	EXHAUST FAN/VENTILATOR
C/C	COOLING COIL
H/C	HEATING COIL
P/F	PRE-FILTER
F/F	FINAL FILTER
C/F	CARBON FILTER
	FAN OR PUMP
	LOUVER
	HUMIDIFIER
	SOUND TRAP
VAV 123	REPRESENTS VAV / NUMBER; VAV BOX W/HEATING COIL; REPRESENTS FLOOR IDENTIFICATION

SEISMIC NOTES

1. EQUIPMENT ANCHORAGE
2. SUBMIT SHOP DRAWINGS AND ENGINEERING CALCULATIONS FOR ANCHORAGE AND SUPPORT OF ALL MECHANICAL PIPING, EQUIPMENT AND MACHINERY AND ASSOCIATED PIPING TO A/E FOR REVIEW.
3. SHOP DRAWINGS AND CALCULATIONS SHALL BE SEALED AND SIGNED BY A QUALIFIED PROFESSIONAL ENGINEER REGISTERED IN THE STATE OF CALIFORNIA.

SEISMIC FORCE CALCULATIONS SHALL SATISFY MINIMUM REQUIREMENTS NOTED IN CBC FOR NONSTRUCTURAL COMPONENTS. FOR CALCULATION PURPOSES THE FOLLOWING VALUES SHALL BE USED:

A. Z = B. I =

NOTE: THIS IS A MASTER SYMBOLS AND ABBREVIATION DRAWING. NOT ALL SYMBOLS AND ABBREVIATIONS MAY BE USED.

Rio Rancho — City of Vision

No.	DESCRIPTION	DATE	BY
1	BID SET	5/22/20	RKS
2			
3			
4			
5			
6			
7			

REVISIONS (OR CHANGE NOTICES)

Designed By: AECOM Imagine it. Delivered. One Park Square, 6501 Americas Pkwy NE, Suite 900, Albuquerque, New Mexico 87110, (505)-855-7500

Designed For: CITY OF RIO RANCHO

WASTEWATER TREATMENT PLANT 2 SOLIDS HANDLING IMPROVEMENTS

MECHANICAL LEGEND, SYMBOLS, ABBREVIATIONS AND GENERAL NOTES

RIPAN K. SAHA — NEW MEXICO — 24260 — PROFESSIONAL ENGINEER — 5-22-2020

PROJECT NO.	WW2030
DESIGNED BY:	RKS, REH
DRAWN BY:	CAM
CHECKED BY:	RKS, REH
DATE MODIFIED:	5-22-2020
DPW CHK:	

SHEET: HV-1

DWG: L:\WW2030\Rio Rancho - Solids Dewatering Design\WW2030_CAD_GIS\WW2030_SHEETS\HV-1.dwg USER: jesse.higgins
DATE: May 22, 2020 - 2:04pm XREFS: WW2030_margin_sheet.dwg ABGR WW2030_Xref_Sheet.dwg XDate.jpg

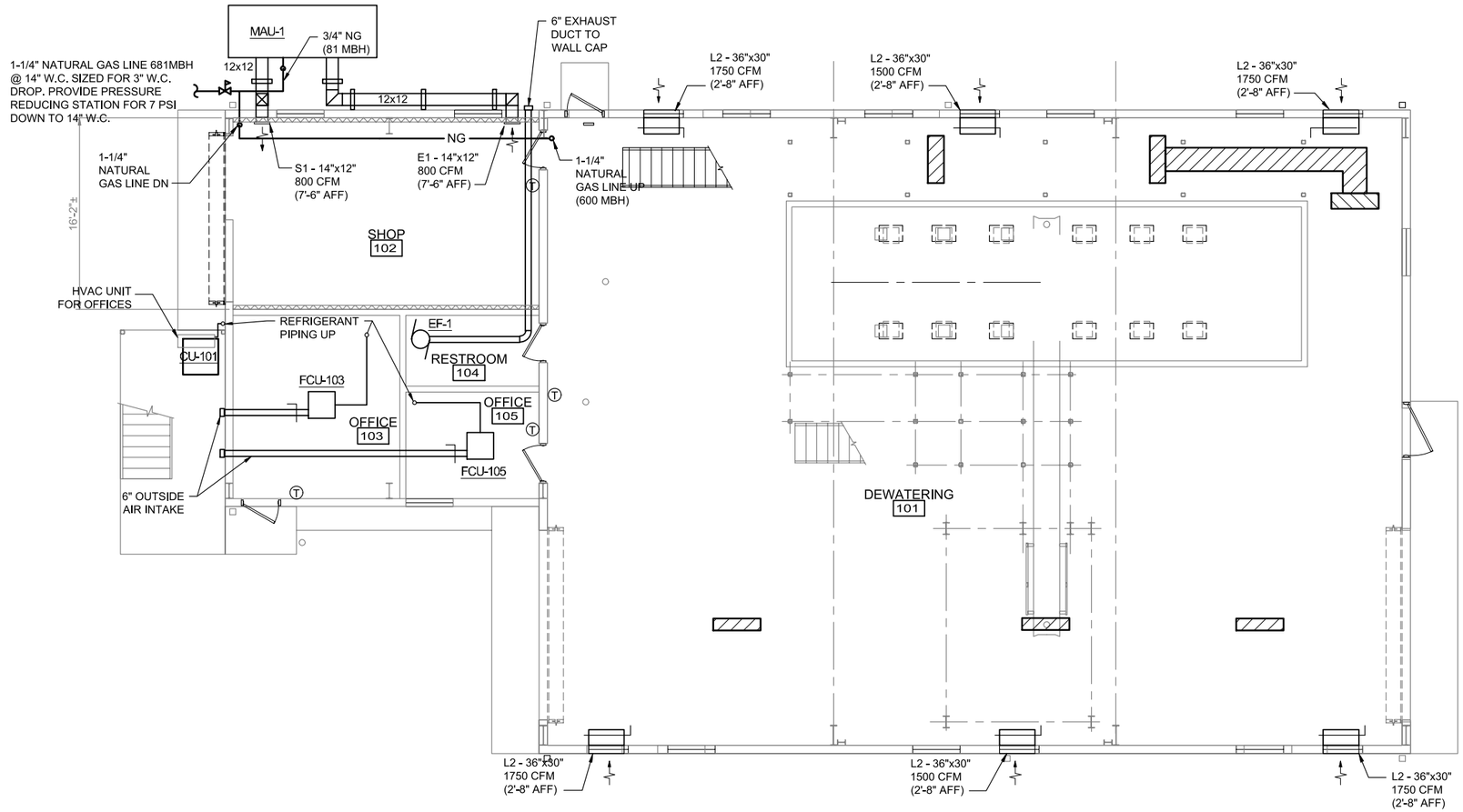

HVAC FIRST FLOOR PLAN
Scale 3/16"=1'-0"

0 4' 8'

No.	DESCRIPTION	DATE	BY
1	BID SET	5/22/20	RKS
2			
3			
4			
5			
6			
7			

REVISIONS (OR CHANGE NOTICES)

Designed By:
AECOM
Imagine it. Delivered.
One Park Square
6501 Americas Pkwy NE, Suite 900
Albuquerque, New Mexico 87110
(505)-855-7500

Designed For:
CITY OF RIO RANCHO

WASTEWATER TREATMENT
PLANT 2 SOLIDS HANDLING
IMPROVEMENTS

HVAC FIRST FLOOR PLAN

RIPAN K. SAHA
NEW MEXICO
24280
PROFESSIONAL ENGINEER
5-22-2020

PROJECT NO.	WW2030
DESIGNED BY:	RKS, REH
DRAWN BY:	CAM
CHECKED BY:	RKS, REH
DATE MODIFIED:	5-22-2020
DPW CHK:	

SHEET:
H-1

DWG: L:\606\60326 Rio Rancho - Solids Dewatering Design\WW-CAD-GIS\WW-CAD\22- SHEETS\H-1.dwg USER: jesse.kingrey
DATE: May 22, 2020 2:47pm XREFs: Sheets_Dewatering_Design_Layout_1 Rio_AECOM_Plot_BBR_v2 IMAGES: Imagine_It_Delivered_Black_300dpi.jpg

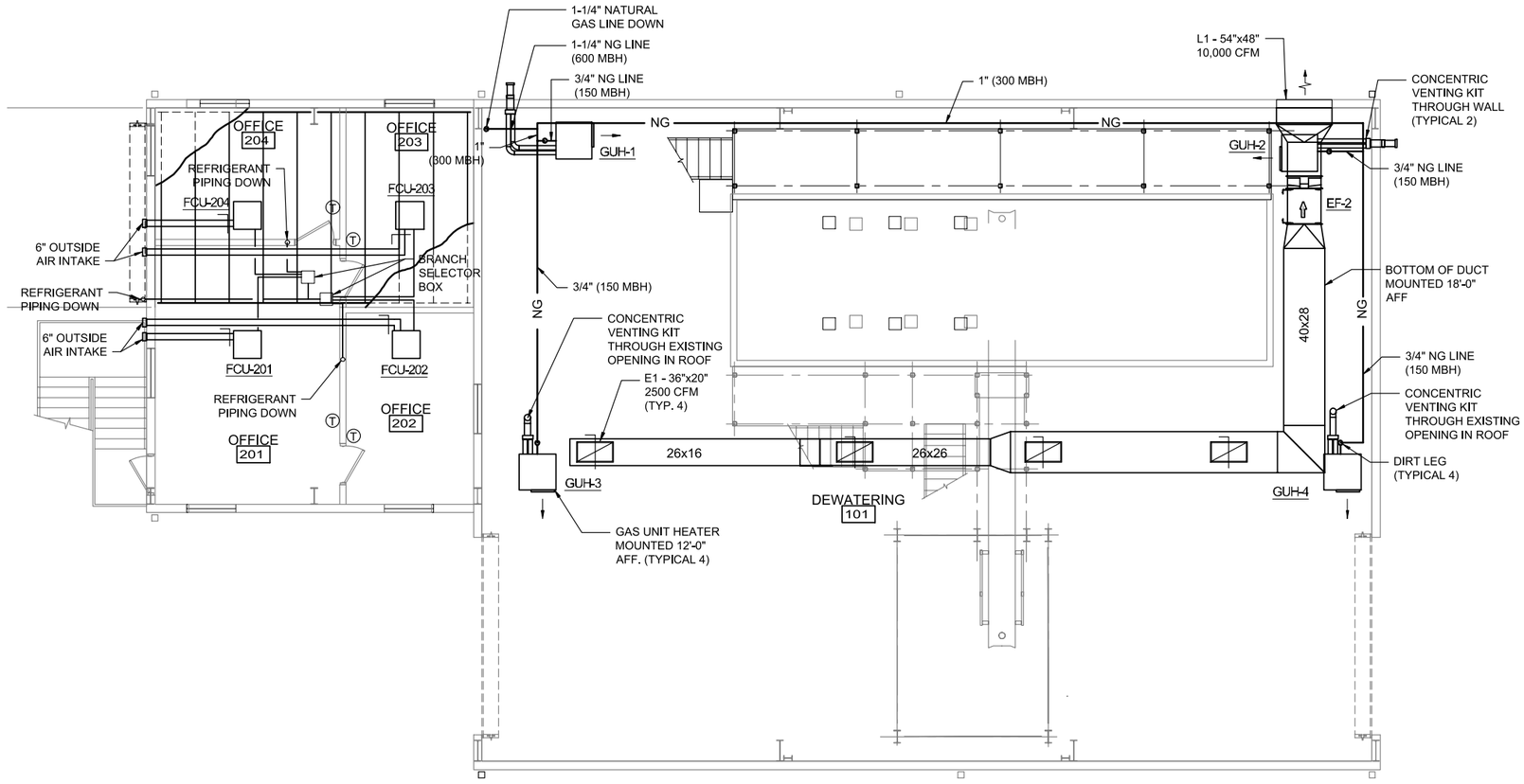

HVAC SECOND FLOOR PLAN

Scale 3/16"=1'-0"

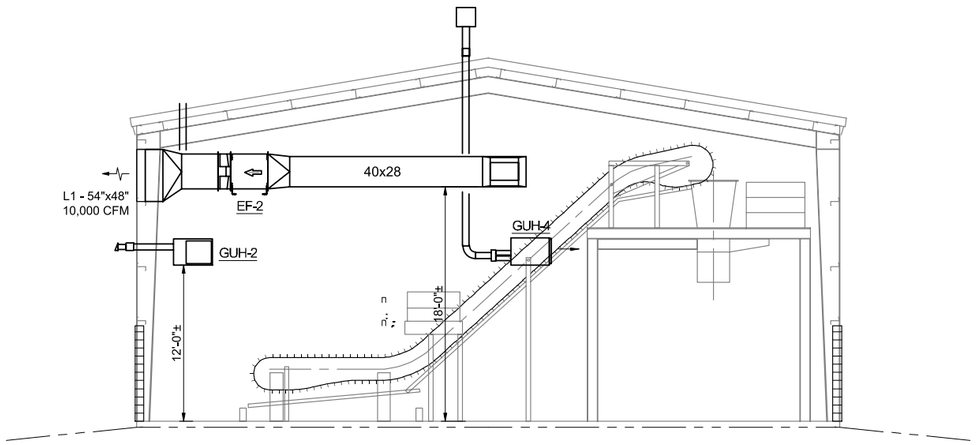

HVAC SECTION

Scale 3/16"=1'-0"

0 4' 8'

No.	DESCRIPTION	DATE	BY
1	BID SET	5/22/20	RKS
2			
3			
4			
5			
6			
7			

REVISIONS (OR CHANGE NOTICES)

Designed By: AECOM Imagine it. Delivered. One Park Square, 6501 Americas Pkwy NE, Suite 900, Albuquerque, New Mexico 87110 (505)-855-7500

Designed For: CITY OF RIO RANCHO

WASTEWATER TREATMENT PLANT 2 SOLIDS HANDLING IMPROVEMENTS

HVAC SECOND FLOOR PLAN

RIPAN K. SAHA, NEW MEXICO, 24280, PROFESSIONAL ENGINEER, 5-22-2020

PROJECT NO.	WW2030
DESIGNED BY:	RKS, REH
DRAWN BY:	CAM
CHECKED BY:	RKS, REH
DATE MODIFIED:	5-22-2020
DPW CHK:	

SHEET: H-2

DWG: L:\606\60326 Rio Rancho - Solids Dewatering Design\WW-CAD-GIS\WW-CAD\20-SHEETS\H-2.dwg USER: jessehiggins
DATE: May 22, 2020 2:26pm PLOTTED BY: REH AECOM_Plot_BW AUGER: Image\A_Different_Look_Inside.jpg

AIR DEVICE SCHEDULE

UNIT DATA		BASIS OF DESIGN			GENERAL DATA			
TAG	FUNCTION	MANUFACTURER	MODEL	FACE SIZE	MATERIAL	INTEGRAL VOLUME DAMPER	MAX NC	SCHEDULE NOTES
S1	SUPPLY	PRICE	510	14" X 12"	ALUMINUM	No	25	
E1	EXHAUST	PRICE	80	36" X 20"	ALUMINUM	No	25	
L1	EXHAUST	GREENHECK	ESD635	54" X 48"	ALUMINUM	No	25	
L2	INTAKE	GREENHECK	ESD635	36" X 30"	ALUMINUM	No	25	

FAN SCHEDULE

UNIT DATA			BASIS OF DESIGN		PERFORMANCE DATA			MOTOR DATA					GENERAL DATA	
TAG	LOCATION	FUNCTION	MANUFACTURER	MODEL	FLOW (CFM)	ESP (IN WG)	SOUND RATING (SONES)	HP	BHP	VOLTS	PHASE	VFD	WEIGHT (LBS)	SCHEDULE NOTES
EF-1	RESTROOM	RESTROOM	GREENHECK	CSP-B150	130	0.50	3	1.7 A	0.06	120	1	NO	20	
EF-2	DEWATERING	DEWATERING	GREENHECK	AX-80-275-0610	10,000	1.50	44	5	3.6	460	3	YES	500	
EF-3	SHOP	SHOP	GREENHECK	SQ-120-VG	800	0.60	6.5	1/2	0.15	120	1	NO	75	

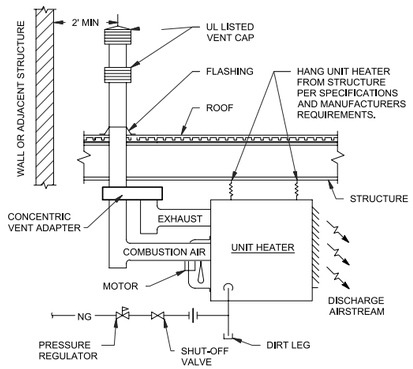

NOTE:
1. SEE PLANS FOR DUCT AND PIPING DIMENSIONS.

1 H-3 GAS UNIT HEATER NTS

UNIT HEATER/MAKE-UP AIR SCHEDULE (NATURAL GAS)

UNIT DATA			BASIS OF DESIGN		PERFORMANCE DATA		NATURAL GAS DATA			DIMENSIONS			ELECTRICAL DATA				GENERAL DATA	
TAG	LOCATION	FUNCTION	MANUFACTURER	MODEL	AIRFLOW (CFM)	AIR TEMP RISE (°F)	INPUT CAPACITY (MBH)	OUTPUT CAPACITY (MBH)	INLET PRESSURE RANGE (IN WG)	LENGTH (IN)	HEIGHT (IN)	DEPTH (IN)	FAN HP	TOTAL AMPS	VOLTS	PHASE	WEIGHT (LBS)	SCHEDULE NOTES
GUH-1	DEWATERING	DEWATERING	MODINE	PTS150	2,140	53	150.0	123.0	6"-7"	36	24	32	1/6	5.05	115	1	175	1
GUH-2	DEWATERING	DEWATERING	MODINE	PTS150	2,140	53	150.0	123.0	6"-7"	36	24	32	1/6	5.05	115	1	175	1
GUH-3	DEWATERING	DEWATERING	MODINE	PTS150	2,140	53	150.0	123.0	6"-7"	36	24	32	1/6	5.05	115	1	175	1
GUH-4	DEWATERING	DEWATERING	MODINE	PTS150	2,140	53	150.0	123.0	6"-7"	36	24	32	1/6	5.05	115	1	175	1
MAU-1	SHOP	SHOP	GREENHECK	RV-25	800	46	80.9	64.7	6"-7"	150	60	53	(2) 1	3.9	480	3	2,100	x

NOTES
1. PROVIDE WITH CONCENTRIC VENTING KIT

VRF AIR COOLED CONDESNER SCHEDULE

UNIT DATA			BASIS OF DESIGN		PERFORMANCE DATA			COMPRESSOR DATA		OUTDOOR PERFORMANCE DATA		ELECTRICAL DATA				GENERAL DATA		
TAG	LOCATION	FUNCTION	MANUFACTURER	MODEL	CAPACITY COOL/HEAT (BTU/h)	EER	NPLV (KW/TON)	# OF COMPR	# OF CIRCUITS	SUMMER AMBIENT (°F)	WINTER AMBIENT (°F)	MCA	MOCP	VOLTS	PHASE	LOW AMBIENT (°F)	WEIGHT (LBS)	SCHEDULE NOTES
CU-101	EXTERIOR	OFFICES	SAMSUNG	AM053NXMDCR/AA	54,000 / 61,000	2.9/3.3	1.2	1	1	95.5	18	34.0	50	208	1	23	225	1

VRF SPLIT SYSTEM SCHEDULE (DX)

INDOOR UNIT DATA			BASIS OF DESIGN		INDOOR COOLING DATA				INDOOR HEATING DATA				INDOOR ELECTRICAL DATA					OUTDOOR UNIT DATA	
TAG	LOCATION	FUNCTION	MANUFACTURER	INDOOR MODEL	AIRFLOW (CFM)	OUTDOOR AIRFLOW (CFM)	TOTAL COOLING CAPACITY (MBH)	SENSIBLE COOLING CAPACITY (MBH)	HEAT PUMP	HEATING CAPACITY (MBH)	COP	FILTER (MERV)	MCA	MOCP	VOLTS	PHASE	TAG	SCHEDULE NOTES
FCU-103	OFFICE 103	OFFICE 103	SAMSUNG	AM009NNNDCH/AA	300	50	9.5	6.8	YES	10.5	3.3	xx	0.17	15	208	1	CU-101	1
FCU-105	OFFICE 105	OFFICE 105	SAMSUNG	AM007NNNDCH/AA	250	30	7.5	5.1	YES	8.7	3.3	xx	0.17	15	208	1	CU-101	1
FCU-201	OFFICE 201	OFFICE 201	SAMSUNG	AM009NNNDCH/AA	300	30	9.5	6.8	YES	10.5	3.3	xx	0.17	15	208	1	CU-101	1
FCU-202	OFFICE 202	OFFICE 202	SAMSUNG	AM007NNNDCH/AA	250	30	7.5	5.1	YES	8.7	3.3	xx	0.17	15	208	1	CU-101	1
FCU-203	OFFICE 203	OFFICE 203	SAMSUNG	AM007NNNDCH/AA	250	50	7.5	5.1	YES	8.7	3.3	xx	0.17	15	208	1	CU-101	1
FCU-204	OFFICE 204	OFFICE 204	SAMSUNG	AM007NNNDCH/AA	250	50	7.5	5.1	YES	8.7	3.3	xx	0.17	15	208	1	CU-101	1

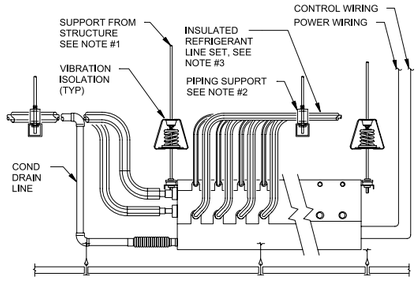

DETAIL NOTES:
1. PROVIDE THREADED ROD AND RESTAINED SPRING ISOLATORS TO SUPPORT UNIT.
2. PROVIDE UNI-STRUT (OR SIMILAR) TRAPEZE HANGERS AND PIPE CLAMPS. INSTALL PIPEWORK IN A NEAT AND WORKMANLIKE MANNER. RUN PARALLEL TO BUILDING STRUCTURE.
3. EXTEND REFRIGERANT LINE SETS TO ASSOCIATED BRANCH CIRCUIT CONTROLLER. REFER TO VRF PIPING DIAGRAM FOR PIPE ROUTING AND SIZES. INSULATE ALL REFRIFERANT LINES.

2 H-3 VRF BRANCH SELECTOR NTS

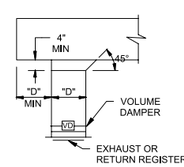

NOTES:
1. "D" IS THROAT DIA OR SIDE DIM. OF SQUARE CONN.

3 H-3 TYPICAL DUCT CONNECTION DETAILS NTS

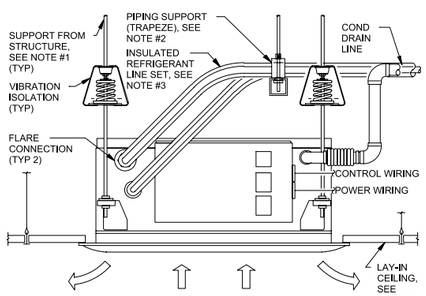

DETAIL NOTES:
1. PROVIDE THREADED ROD AND RESTAINED SPRING ISOLATORS TO SUPPORT UNIT.
2. PROVIDE UNI-STRUT (OR SIMILAR) TRAPEZE HANGERS AND PIPE CLAMPS. INSTALL PIPEWORK IN A NEAT AND WORKMANLIKE MANNER. RUN PARALLEL TO BUILDING STRUCTURE.
3. EXTEND REFRIGERANT LINE SETS TO ASSOCIATED BRANCH CIRCUIT CONTROLLER. REFER TO VRF PIPING DIAGRAM FOR PIPE ROUTING AND SIZES. INSULATE ALL REFRIFERANT LINES.
4. CUT/PATCH FOR INSTALLATION OF CEILING-MOUNTED UNITS. PROVIDE ADDITIONAL GRID-TEE AS REQUIRED.

4 H-3 VRF CASSETTE NTS

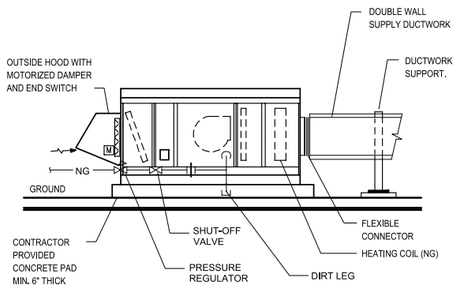

5 H-3 MAKE-UP AIR UNIT DETAIL NTS

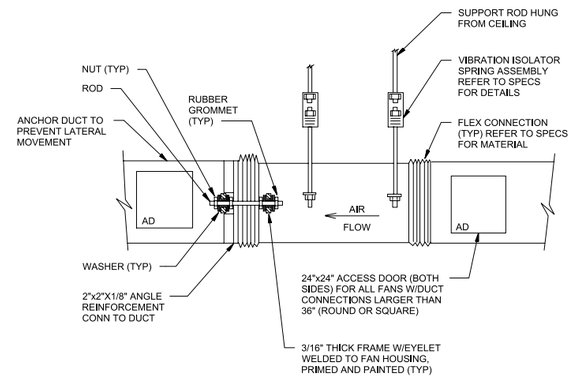

6 H-3 INLINE FAN DETAIL NTS

REVISIONS (OR CHANGE NOTICES)

No.	DESCRIPTION	DATE	BY
1	BID SET	5/22/20	RKS
2			
3			
4			
5			
6			
7			

Designed By: AECOM Imagine it. Delivered. 6501 Americas Pkwy NE, Suite 900 Albuquerque, New Mexico 87110 (505)-855-7500

Designed For: CITY OF RIO RANCHO

WASTEWATER TREATMENT PLANT 2 SOLIDS HANDLING IMPROVEMENTS

HVAC SCHEDULES AND DETAILS

RIPAN K. SAHA NEW MEXICO 24260 PROFESSIONAL ENGINEER 5-22-2020

PROJECT NO.	WW2030
DESIGNED BY:	RKS, REH
DRAWN BY:	CAM
CHECKED BY:	RKS, REH
DATE MODIFIED:	5-22-2020
DPW CHK:	

SHEET: H-3

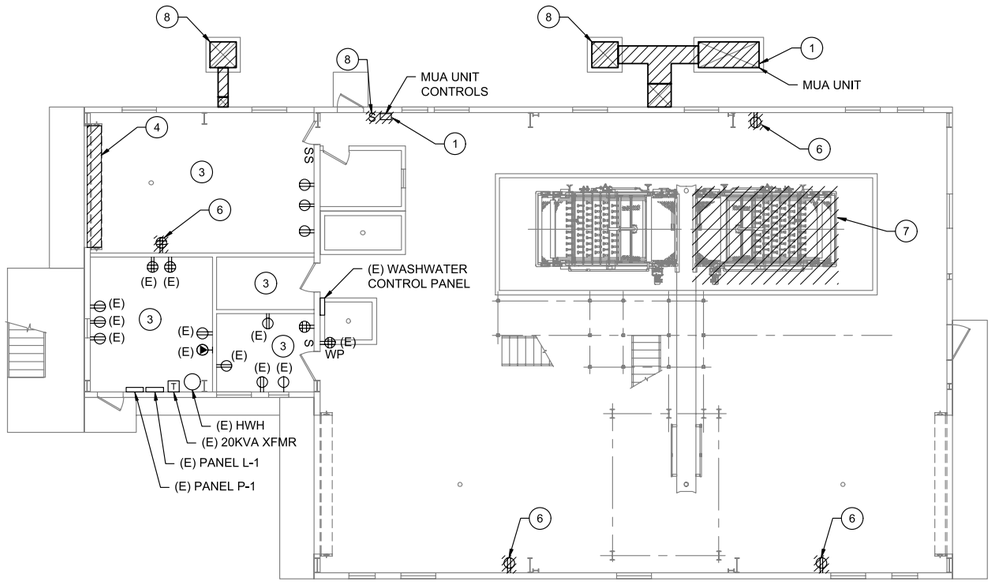

FIRST FLOOR ELECTRICAL DEMO PLAN
Scale 1/8"=1'-0"

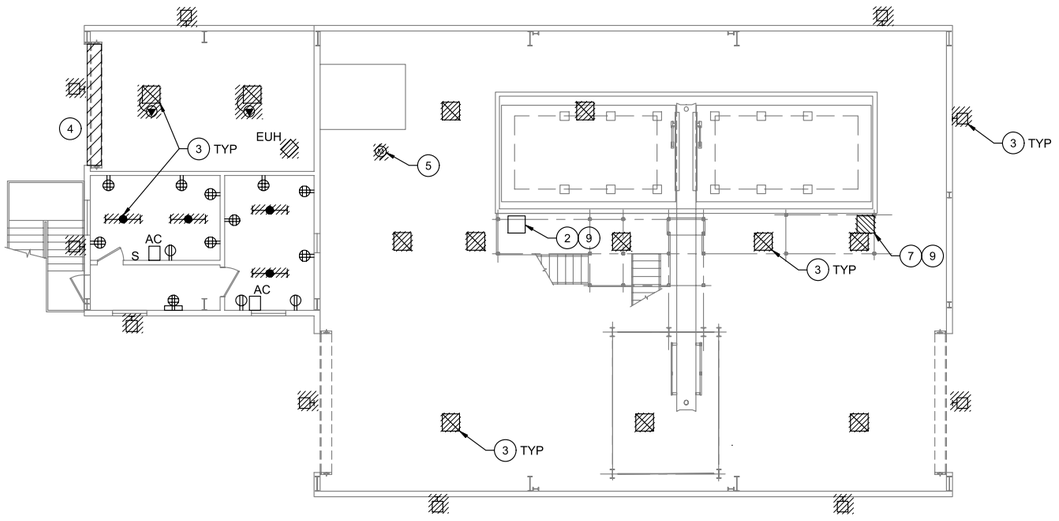

SECOND FLOOR ELECTRICAL DEMO PLAN
Scale 1/8"=1'-0"

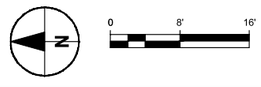

GENERAL NOTES:

1. DIMENSIONS SHOWN MAY VARY FROM ACTUAL CONDITIONS. CONTRACTOR SHALL FIELD VERIFY ALL DIMENSIONS AND ELEVATIONS.
2. OWNER RETAINS THE RIGHT OF FIRST REFUSAL ON AL DEMOLISHED EQUIPMENT.

KEYED NOTES ◯

1. REMOVE CABLE AND CONDUIT FROM DEMOLISHED MAKEUP AIR UNIT (MUA) AND MUA CONTROLS BACK TO SOURCE.
2. EXISTING BELT PRESS CONTROL PANEL AND BELT PRESS TO REMAIN.
3. REMOVE LIGHT FIXTURES, POWER CABLING, AND CONDUIT BACK TO SOURCE.
4. REMOVE POWER & ASSOCIATED ACCESSORIES FOR ROLL-UP DOOR BACK TO SOURCE.
5. REMOVE POWER TO EXISTING POLYMER PUMP BACK TO SOURCE.
6. REMOVE DEVICE, WIRING, & CONDUIT BACK TO SOURCE.
7. REMOVE BELT PRESS CONTROL PANEL. RETURN CONTROL PANEL TO CLIENT FOR SPARE PARTS TO EXISTING CONTROL PANEL. REMOVE ALL CONTROL WIRING, CONDUITS, AND CABLE ASSOCIATED WITH BELT PRESS BACK TO SOURCE.
8. REMOVE CABLE AND CONDUIT FOR EVAPORATIVE COOLER AND CONTROLS BACK TO SOURCE.
9. COORDINATE RELOCATION OF EXISTING SLUDGE PUMP POWER TO NEW BELT PRESS CONTROL PANEL.

RioRancho City of Vision

No.	DESCRIPTION	DATE	BY
1	BID SET	5/22/20	RKS
2			
3			
4			
5			
6			
7			

REVISIONS (OR CHANGE NOTICES)

Designed By:
AECOM Imagine it. Delivered.
One Park Square
6501 Americas Pkwy NE, Suite 900
Albuquerque, New Mexico 87110
(505)-855-7500

Designed For:
CITY OF RIO RANCHO

WASTEWATER TREATMENT PLANT 2 SOLIDS HANDLING IMPROVEMENTS

ELECTRICAL DEMOLITION PLANS

EUGENE DAVID MOE
NEW MEXICO
21369
5-22-2020
PROFESSIONAL ENGINEER

PROJECT NO.	WW2030
DESIGNED BY:	RKS, REH
DRAWN BY:	CAM
CHECKED BY:	RKS, REH
DATE MODIFIED:	5-22-2020
DPW CHK:	

SHEET: DE-1

SYMBOLS

LIGHTING

- 2'X4' FLUORESCENT LIGHT FIXTURE (A, 1, a) — A = FIXTURE TYPE; 1 = CIRCUIT NUMBER; a = SWITCH CONTROLLING FIXTURE
- 1'X4' FLUORESCENT LIGHT FIXTURE (A, 1, a) — A = FIXTURE TYPE; 1 = CIRCUIT NUMBER; a = SWITCH CONTROLLING FIXTURE
- 1'X4' WALL MOUNTED FLUORESCENT LIGHT FIXTURE
- 2'X2' FLUORESCENT LIGHT FIXTURE (A, 1, a) — A = FIXTURE TYPE; 1 = CIRCUIT NUMBER; a = SWITCH CONTROLLING FIXTURE
- 2'X4' FLUORESCENT LIGHT FIXTURE WITH EMERGENCY BALLAST OR EMERGENCY BATTERY PACK
- 1'X4' FLUORESCENT LIGHT FIXTURE WITH EMERGENCY BALLAST OR EMERGENCY BATTERY PACK
- RECESSED OR CEILING MOUNTED INCANDESCENT LIGHT FIXTURE, LETTER DENOTES FIXTURE TYPE
- WALL MOUNTED INCANDESCENT LIGHT FIXTURE, LETTER DENOTES FIXTURE TYPE
- CEILING OR PENDANT MOUNTED LIGHT FIXTURE, LETTER DENOTES FIXTURE TYPE, SUBSCRIPT INDICATES CONTROL
- CEILING MOUNTED DOUBLE FACE EXIT LIGHT, LETTER DENOTES FIXTURE TYPE, ARROW DENOTES DIRECTIONAL ARROWS
- CEILING MOUNTED SINGLE FACE EXIT LIGHT
- WALL MOUNTED EXIT LIGHT
- EMERGENCY LIGHT FIXTURE, RECHARGEABLE TYPE
- POLE MOUNTED LUMINAIRE
- POLE MOUNTED LIGHT WITH CONCRETE BASE (LT/C)

SWITCHES

- S_a SINGLE POLE SWITCH, 20A, 120/277V, LOWER CASE LETTER DENOTES CONTROL
- S_3 THREE-WAY SWITCH, 20A, 120/277V
- S_4 FOUR-WAY SWITCH, 20A, 120/277V
- S_D DIMMER SWITCH, 1500 WATT (FLUORESCENT TYPE) UNLESS OTHERWISE NOTED
- S_T MOTOR RATED SWITCH, WITH THERMAL OVERLOAD PROTECTION
- OS WALL MOUNTED OCCUPANCY SENSOR WITH OVERRIDE SWITCH (LIGHTING)
- OS CEILING MOUNTED ULTRASONIC OCCUPANCY SENSOR (LIGHTING)
- MD MOTION DETECTOR
- MOTION DETECTOR
- 30A NON-FUSIBLE DISCONNECT SWITCH, NUMBER INDICATES SWITCH SIZE
- F FUSIBLE DISCONNECT SWITCH
- T THERMOSTAT

GROUNDING/LIGHTNING PROTECTION

- AIR TERMINAL
- CONNECTION POINT
- EXOTHERMIC WELD
- GROUND CONNECTION
- GROUNDING ROD
- GROUNDING BUS BAR

PANELBOARDS/POWER EQUIPMENT

- T PAD MOUNTED TRANSFORMER
- LP-x LIGHTING PANELBOARD
- PP-x POWER PANELBOARD
- 1 MOTOR, NUMBER INDICATES HORSEPOWER

RECEPTACLES/J-BOXES

- 20A, 120V, SIMPLEX RECEPTACLE
- 20A, 120V, DUPLEX RECEPTACLE
- GFCI WP 20A, 120V, GROUND FAULT CIRCUIT INTERRUPTER DUPLEX RECEPTACLE WITH WEATHERPROOF COVER
- 20A, 120V, DUPLEX RECEPTACLE, CEILING MOUNTED
- 20A, 120V, DUPLEX RECEPTACLE, IN FLOOR BOX
- 20A, 120V, DOUBLE DUPLEX RECEPTACLE
- 20A, 120V, DOUBLE DUPLEX RECEPTACLE, CEILING MOUNTED
- 20A, 120V, DOUBLE DUPLEX RECEPTACLE, IN FLOOR BOX
- SPECIAL PURPOSE RECEPTACLE, GROUNDING TYPE, WALL MOUNTED (NEMA TYPE & AMP RATING AS NOTED)
- SPECIAL PURPOSE RECEPTACLE, GROUNDING TYPE, CEILING MOUNTED (NEMA TYPE & AMP RATING AS NOTED)
- J JUNCTION BOX, RECESSED/CEILING MOUNTED
- J JUNCTION BOX, WALL MOUNTED
- J JUNCTION BOX, FLUSH IN FLOOR
- HOME RUN WITH 1 NEUTRAL, 1 HOT, 1 GROUND

COMMUNICATIONS/SPECIAL SYSTEMS

- COMBINATION TELEPHONE/DATA OUTLET, WALL MOUNTED (1 VOICE; 2 DATA JACKS)
- COMBINATION TELEPHONE/DATA OUTLET, IN FLOOR BOX (1 VOICE; 2 DATA JACKS)
- C UNDERGROUND COMMUNICATIONS DUCTS
- TELEPHONE OUTLET, WALL MOUNTED
- CCTV CAMERA, WALL MOUNTED
- PA WP EXTERIOR PUBLIC ADDRESS SPEAKER; WP = WEATHERPROOF
- S WALL MOUNTED SPEAKER
- S CEILING SPEAKER, FLUSH MOUNTED
- IC INTERCOM OUTLET, WALL MOUNTED
- (#) DATA OUTLET, WALL MOUNTED (# REFERS TO QUANTITY IF MORE THAN ONE)

FIRE ALARM SYSTEM

- FACP FIRE ALARM CONTROL PANEL
- FAAN FIRE ALARM ANNUNCIATOR PANEL
- F FIRE ALARM MANUAL PULL STATION, WALL MOUNTED
- F FIRE ALARM BELL, WALL MOUNTED
- F FIRE ALARM HORN/STROBE, ONE ASSEMBLY, WALL MOUNTED
- F FIRE ALARM FLASHING STROBE LIGHT, WALL MOUNTED
- D DUCT DETECTOR
- FIRE ALARM HEAT DETECTOR, COMBINATION TYPE, CEILING MOUNTED
- SMOKE DETECTOR
- TS TAMPER SWITCH
- FS FLOW SWITCH
- PS PRESSURE SWITCH
- END OF LINE RESISTOR

ONE-LINE DIAGRAM

- 480 Δ / 208Y/120 Y, 45 KVA TRANSFORMER, DELTA-WYE CONNECTION
- 100AF / 100AT CIRCUIT BREAKER; AF = FRAME RATING IN AMPERES; AT = TRIP RATING IN AMPERES
- 100A DISCONNECT SWITCH, RATED AS NOTED
- 20A FUSE, RATING AS NOTED
- DRAWOUT BREAKER
- MANUAL OR AUTOMATIC TRANSFER SWITCH
- CONNECTION POINT
- 1 / 30A COMBINATION MAGNETIC STARTER; 1 = INDICATES NEMA STARTER SIZE; 30A = INDICATES DISCONNECT RATING
- 1 MAGNETIC STARTER; 1 = INDICATES NEMA STARTER SIZE
- E UNDERGROUND ELECTRICAL
- E PRI UNDERGROUND ELECTRICAL PRIMARY POWER CIRCUIT IN CONCRETE ENCASED DUCT

ABBREVIATIONS

A	AMPERE
AD	AIR DRYER
A.F.F.	ABOVE FINISHED FLOOR
A.F.G.	ABOVE FINISHED GRADE
AIC	AMPERES INTERRUPTING CAPACITY
APPROX	APPROXIMATELY
AWG	AMERICAN WIRE GAUGE
BC	BARE COPPER
C	CONDUIT
CA	AIR COMPRESSOR
CCT	CIRCUIT
CB	CIRCUIT BREAKER
CKT	CIRCUIT
℄	CENTER LINE
CO	CONDUIT ONLY
CONC	CONCRETE
CT	CURRENT TRANSFORMER
CU	COPPER
CWP	WATER CONDENSOR
DWP	DOMESTIC WATER PUMP
(E)	EXISTING
EF	EXHAUST FAN
EMH	ELECTRICAL MANHOLE
EMCS	ENERGY MONITORING AND CONTROL SYSTEM
EP	HAZARDOUS CLASSIFICATION – EXPLOSION PROOF
EWC	ELECTRIC WATER COOLER
FA	FIRE ALARM
FACP	FIRE ALARM CONTROL PANEL
FC	FAN COIL
FLR	FLOOR
FT	FEET
GA	GAUGE
GFCI	GROUND FAULT CIRCUIT INTERRUPTER
GND	GROUND
GRS	GALAVANIZED RIDGID STEEL
HID	HIGH INTENSITY DISCHARGE
HH	HANDHOLE
HPF	HIGH POWER FACTOR
HP	HEAT PUMP
HPS	HIGH PRESSURE SODIUM
IN	INCHES
INCAND	INCANDESCENT
KCMIL	THOUSAND CIRCULAR MILLS
KVA	KILOVOLT AMPERE
KWH	KILOWATT-HOUR
LAN	LOCAL AREA NETWORK
LT	LONG TIME
LP	LIGHTING PANEL
M	METER
MAX	MAXIMUM
MCC	MOTOR CONTROL CENTER
MDP	MAIN DISTRIBUTION PANELBOARD
MIN	MINIMUM
mm	MILLIMETER
N/A	NOT APPLICABLE
NIC	NOT IN CONTRACT
OC	ON CENTER
OCEW	ON CENTER EACH WAY
OH	OVERHEAD
O/P	OUTPUT
PA	PUBLIC ADDRESS
PB	PULL BOX
PR	PAIR
PSI	POUNDS PER SQUARE INCH
PT	POTENTIAL TRANSFORMER
PP	POWER PANEL / POWER POLE
PVC	POLYVINYL CHLORIDE
RGS	RIGID GALVANIZED STEEL
RH	RADIANT HEATER
RM	ROOM
RMS	ROOT MEAN SQUARE
RP	RECEPTACLE PANEL
RSC	RIGID STEEL CONDUIT
ST	SHORT TIME
SYM	SYMMETRICAL
T	TRANSFORMER
TC	TERMINAL CABINET
TTB	TELEPHONE TERMINAL BOARD
TVSS	TRANSIENT VOLTAGE SURGE SUPPRESSION & FILTERING
TW/SHLD	TWISTED SHIELDED
TYP	TYPICAL
UH	UNIT HEATER
UON	UNLESS OTHERWISE NOTED
V	VOLT
VMS	VARIABLE MESSAGE SIGN
W	WATT-WIM
W/	WITH
WP	WEATHERPROOF
XP	EXPLOSION PROOF
XFMR	TRANSFORMER

GENERAL NOTES

1. CALL BEFORE YOU DIG IN THE STATE OF NEW MEXICO. CALL 1-800-321-ALERT FOR THE NEW MEXICO ONE CALL SYSTEM.
2. MINIMUM POWER CABLE SIZE FOR THIS INSTALLATION SHALL BE #12 AWG.
3. MINIMUM CONDUIT SIZE IS 3/4".

RRnoRancho City of Vision

No.	DESCRIPTION	DATE	BY
1	BID SET	5/22/20	RKS
2			
3			
4			
5			
6			
7			

REVISIONS (OR CHANGE NOTICES)

Designed By: AECOM Imagine it. Delivered.
6501 America Pkwy NE, Suite 900
One Park Square
Albuquerque, New Mexico 87110
(505)-855-7500

Designed For: CITY OF RIO RANCHO

WASTEWATER TREATMENT PLANT 2 SOLIDS HANDLING IMPROVEMENTS

ELECTRICAL SYMBOLS AND LEGEND

EUGENE DAVID MOORE — NEW MEXICO — 21369 — 5-22-2020 — PROFESSIONAL ENGINEER

PROJECT NO.	WW2030
DESIGNED BY:	RKS, REH
DRAWN BY:	CAM
CHECKED BY:	RKS, REH
DATE MODIFIED:	5-22-2020
DPW CHK:	

SHEET: E-1

DWG: L:\GRAD\206 Rio Rancho - Solids Dewatering Design\WW2-CAD\WW2-CAD\WW2-SHEETS\E-1.dwg USER: jesse.higgins
DATE: May 22, 2020 2:30pm XREFS: WW2-XREF.dwg IMAGES: image2.jpg, image3.jpg, image4.jpg, image5.jpg, image6.jpg, image7.jpg

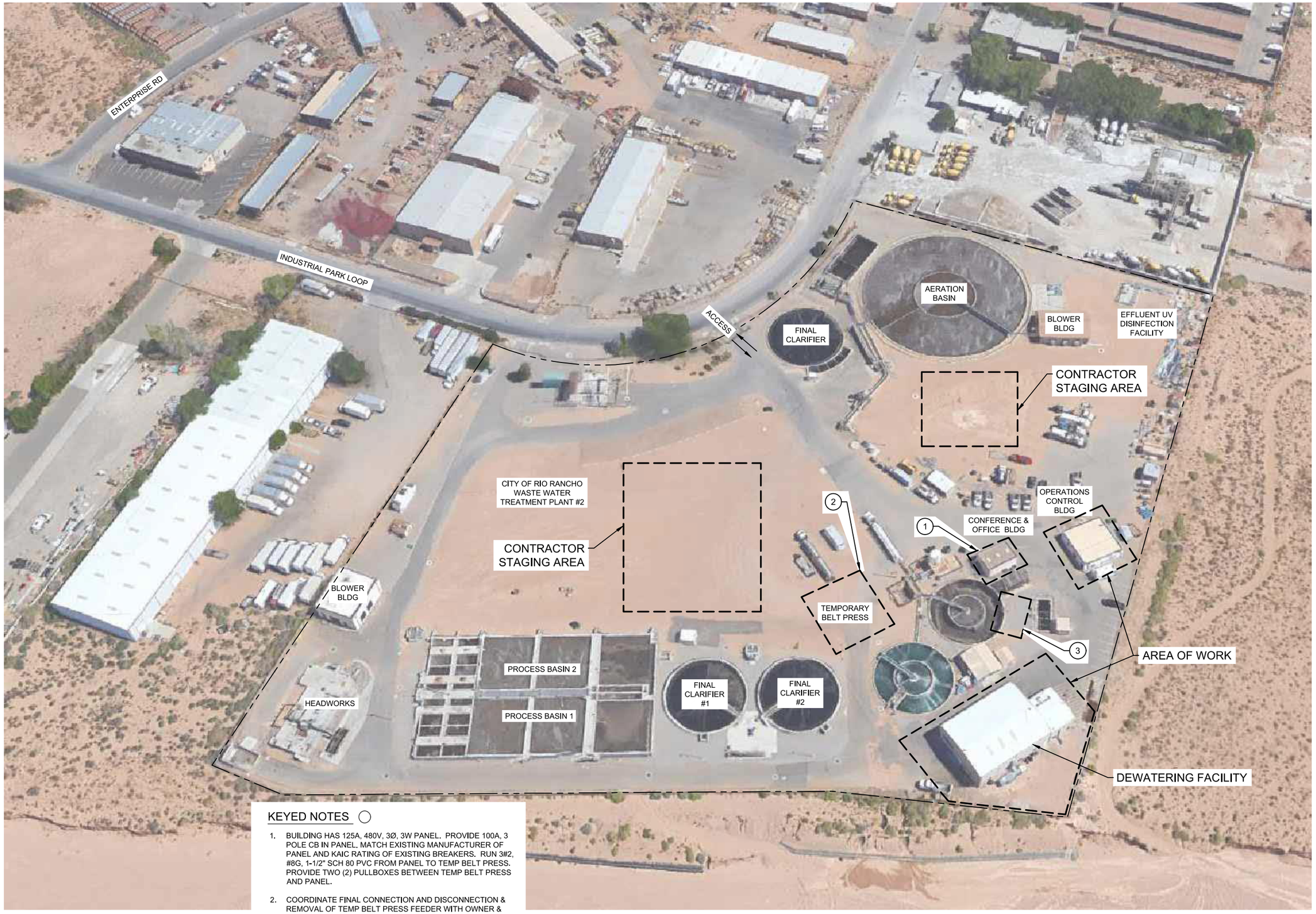

KEYED NOTES

1. BUILDING HAS 125A, 480V, 3Ø, 3W PANEL. PROVIDE 100A, 3 POLE CB IN PANEL. MATCH EXISTING MANUFACTURER OF PANEL AND KAIC RATING OF EXISTING BREAKERS. RUN 3#2, #8G, 1-1/2" SCH 80 PVC FROM PANEL TO TEMP BELT PRESS. PROVIDE TWO (2) PULLBOXES BETWEEN TEMP BELT PRESS AND PANEL.
2. COORDINATE FINAL CONNECTION AND DISCONNECTION & REMOVAL OF TEMP BELT PRESS FEEDER WITH OWNER & MECHANICAL CONTRACTOR.
3. LOCATION OF EXISTING SLUDGE PUMPS.

ELECTRICAL SITE PLAN
Scale NTS

RR Rio Rancho City of Vision

No.	DESCRIPTION	DATE	BY
1	BID SET	5/22/20	RKS
2			
3			
4			
5			
6			
7			

REVISIONS (OR CHANGE NOTICES)

Designed By:
AECOM Imagine it. Delivered.
One Park Square
6501 Americas Pkwy NE, Suite 900
Albuquerque, New Mexico 87110
(505)-855-7500

Designed For:
CITY OF RIO RANCHO

WASTEWATER TREATMENT PLANT 2 SOLIDS HANDLING IMPROVEMENTS

ELECTRICAL SITE PLAN

RIPAN K. SAHA
NEW MEXICO
24280
5-22-2020
PROFESSIONAL ENGINEER

PROJECT NO.	WW2030
DESIGNED BY:	RKS, REH
DRAWN BY:	CAM
CHECKED BY:	RKS, REH
DATE MODIFIED:	5-22-2020
DPW CHK:	

SHEET: E-2

DWG: L:\60610726 Rio Rancho - Solids Dewatering Design\WW-CAD\CAD\Sht-CAD\20-SHEETS\E-2.dwg USER: jesse.higgins
DATE: May 22, 2020 2:39pm XREFS: WW-ARCH-Plan.dgn MASS: WWP-2.dwg Project_Delivered_Base_Sheet.dgn

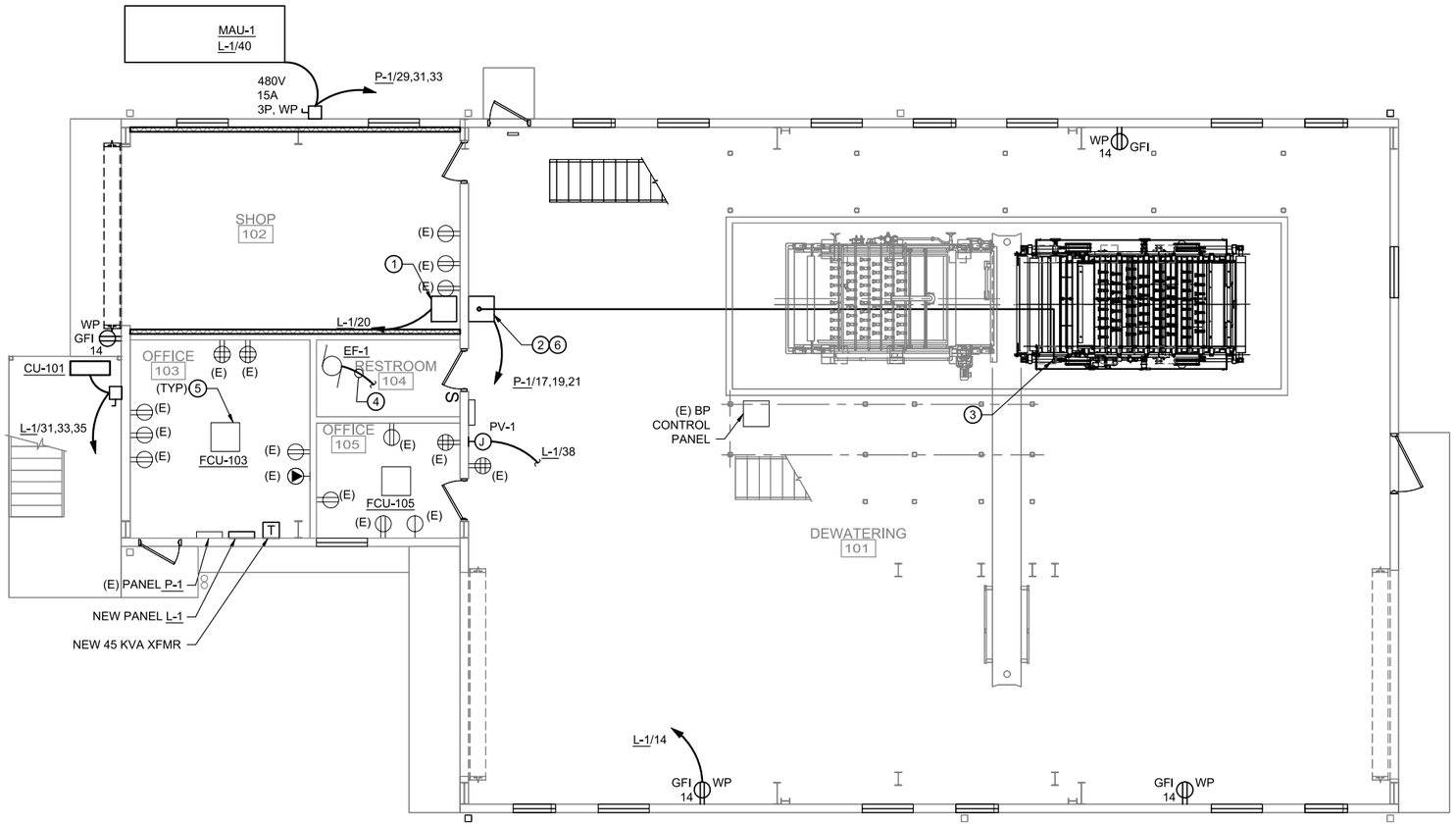

FIRST FLOOR POWER PLAN
Scale 3/16"=1'-0"

0 4' 8'

GENERAL NOTES:

1. DIMENSIONS ARE BASED ON OWNERS SUPPLIED RECORD DRAWINGS AND MAY VARY FROM ACTUAL CONDITIONS. CONTRACTOR SHALL FIELD VERIFY ALL DIMENSIONS AND ELEVATIONS.

KEYED NOTES

1. POLYMER PUMP FEED CONTROL PANEL (BY CONTRACTOR).
2. NEW BELT FILTER PRESS CONTROL PANEL (BY CONTRACTOR).
3. (3) 3/4" C. & (1) 1" C BETWEEN CONTROLLER AND FINAL CONNECTIONS.
4. POWER NEW LIGHTS AND FAN FROM EXISTING CIRCUIT L-1/12. FAN & LIGHTS TO BE CONTROLLED BY WALL SWITCH.
5. MECHANICAL FAN COIL UNITS (FCU) AND BRANCH CIRCUIT SELECTORS (BCS) SHALL BE POWERED BY L-1/27,29. FCU & BCS SUPPLIED AND INSTALLED BY M.C., POWERED BY E.C.
6. POWER EXISTING SLUDGE PUMPS FROM NEW BELT PRESS CONTROL PANEL. MATCH EXISTING CONDUIT AND CABLE.

Rio Rancho City of Vision

No.	DESCRIPTION	DATE	BY
1	BID SET	5/22/20	RKS
2			
3			
4			
5			
6			
7			

REVISIONS (OR CHANGE NOTICES)

Designed By:
AECOM Imagine it. Delivered.
One Park Square
6501 Americas Pkwy NE, Suite 900
Albuquerque, New Mexico 87110
(505)-855-7500

Designed For:
CITY OF RIO RANCHO

WASTEWATER TREATMENT
PLANT 2 SOLIDS HANDLING
IMPROVEMENTS

FIRST FLOOR POWER PLAN

EUGENE DAVID MOE
NEW MEXICO
21369
5-22-2020
PROFESSIONAL ENGINEER

PROJECT NO.	WW2030
DESIGNED BY:	RKS, REH
DRAWN BY:	CAM
CHECKED BY:	RKS, REH
DATE MODIFIED:	5-22-2020
DPW CHK:	

SHEET:
E-3

GENERAL NOTES:

1. DIMENSIONS ARE BASED ON OWNERS SUPPLIED RECORD DRAWINGS AND MAY VARY FROM ACTUAL CONDITIONS. CONTRACTOR SHALL FIELD VERIFY ALL DIMENSIONS AND ELEVATIONS.
2. REFERENCE ELEVATION: 5145.50 = EXISTING FINISHED FLOOR (0'-0").

KEYED NOTES ◯

1. MECHANICAL FAN COIL UNITS (FCU) AND BRANCH CIRCUIT SELECTORS (BCS) SHALL BE POWERED BY L-1/27,29. FCU & BCS SUPPLIED AND INSTALLED BY MECHANICAL CONTRACTOR POWERED BY ELECTRICAL CONTRACTOR.
2. PROVIDE TOUCHSCREEN CONTROL OF BELT PRESS(ES). PROVIDE 1" C. BACK TO NEW BELT PRESS CONTROL PANEL(S).

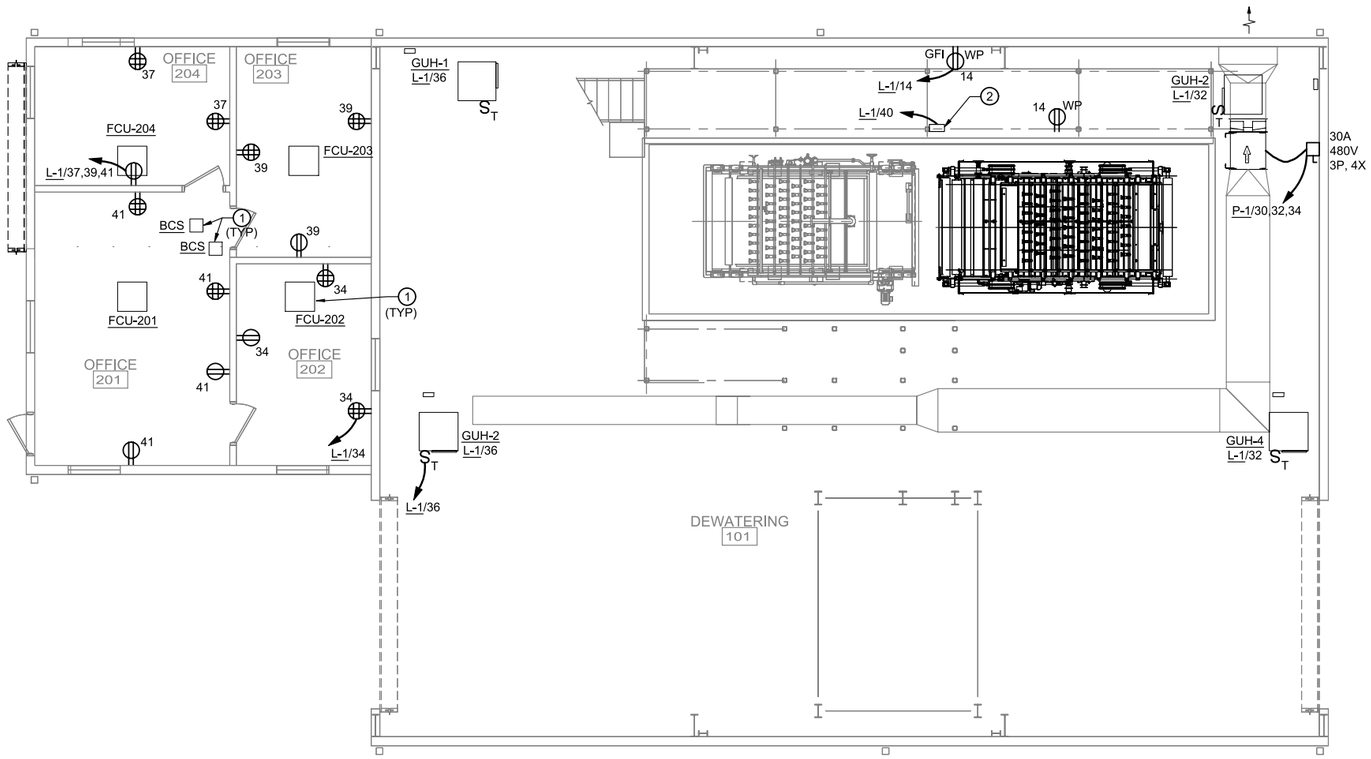

SECOND FLOOR POWER PLAN
Scale 3/16"=1'-0"

0 4' 8'

No.	DESCRIPTION	DATE	BY
1	BID SET	5/22/20	RKS
2			
3			
4			
5			
6			
7			

REVISIONS (OR CHANGE NOTICES)

Designed By: AECOM Imagine it. Delivered.
6501 America Pkwy NE, Suite 900
Albuquerque, New Mexico 87110
(505)-855-7500

Designed For: CITY OF RIO RANCHO

WASTEWATER TREATMENT PLANT 2 SOLIDS HANDLING IMPROVEMENTS

SECOND FLOOR POWER PLAN

EUGENE DAVID MOE NEW MEXICO 21369 5-22-2020 PROFESSIONAL ENGINEER

PROJECT NO.	WW2030
DESIGNED BY:	RKS, REH
DRAWN BY:	CAM
CHECKED BY:	RKS, REH
DATE MODIFIED:	5-22-2020
DPW CHK:	

SHEET: E-4

DWG: L:\WW\WW2030 Rio Rancho - Solids Dewatering Design\WW2-CAD-DSN\WW2-CAD\02-SHEETS\E-F-1.dwg USER: Jesse.Vigil
DATE: May 22, 2020 9:36am XREFS: Shared Resources\Standard Details\Electrical\Standard Symbols.dwg IMAGES: Shared Resources\Standard Details\Electrical\Standard Symbols.jpg

GENERAL NOTES:

1. DIMENSIONS ARE BASED ON OWNERS SUPPLIED RECORD DRAWINGS AND MAY VARY FROM ACTUAL CONDITIONS. CONTRACTOR SHALL FIELD VERIFY ALL DIMENSIONS AND ELEVATIONS.

KEYED NOTES ◯

1. POWER NEW LIGHTS AND FAN FROM EXISTING CIRCUIT L-1/12. FAN & LIGHTS TO BE CONTROLLED BY WALL SWITCH.
2. EXTERIOR LIGHT CONTROL SWITCH.

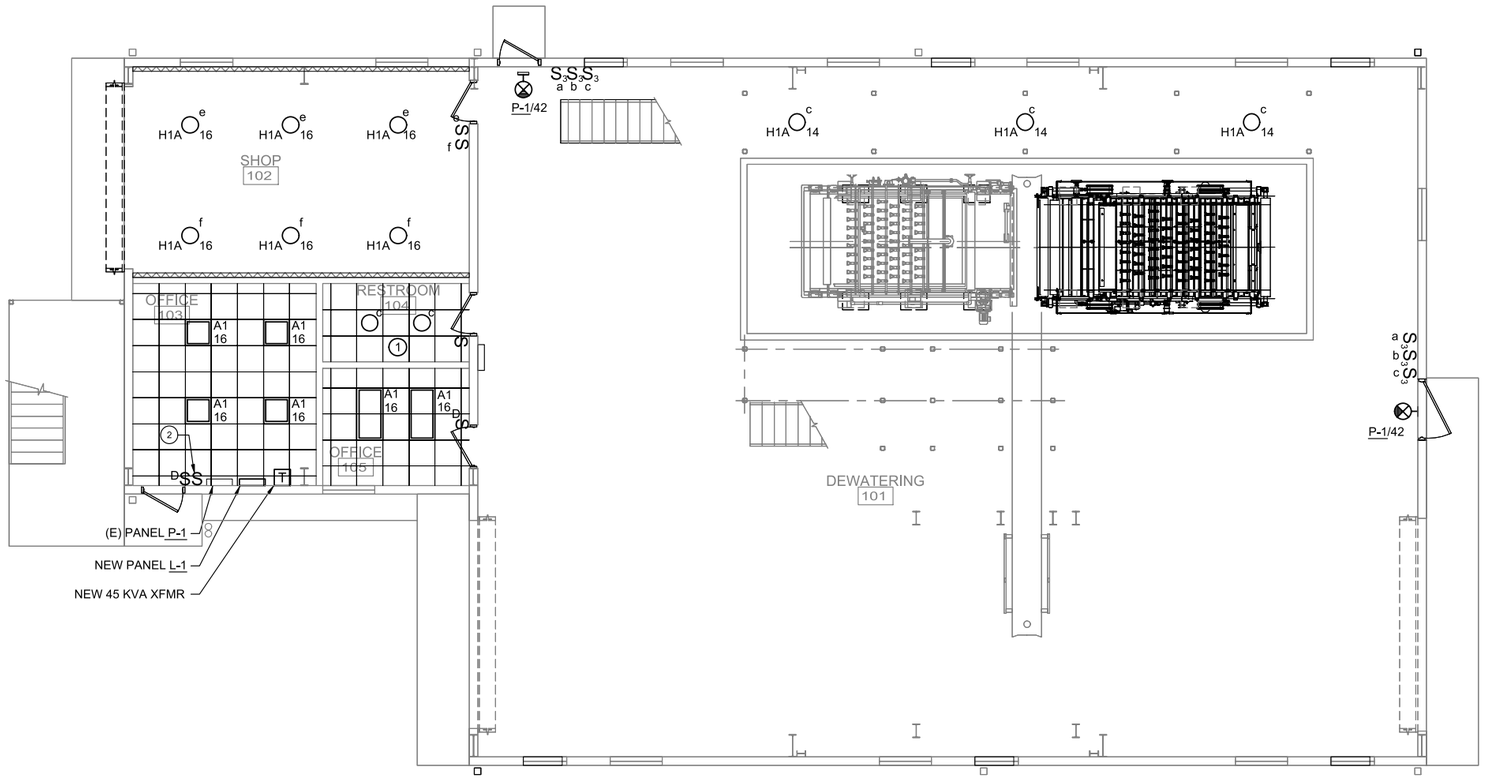

FIRST FLOOR LIGHTING PLAN
Scale 3/16"=1'-0"

0 4' 8'

No.	DESCRIPTION	DATE	BY
1	BID SET	5/22/20	RKS
2			
3			
4			
5			
6			
7			

REVISIONS (OR CHANGE NOTICES)

Designed By: AECOM Imagine it. Delivered.
One Park Square
6501 Americas Pkwy NE, Suite 900
Albuquerque, New Mexico 87110
(505)-855-7500

Designed For: CITY OF RIO RANCHO

WASTEWATER TREATMENT PLANT 2 SOLIDS HANDLING IMPROVEMENTS

FIRST FLOOR LIGHTING PLAN

EUGENE DAVID NOE
NEW MEXICO
21369
5-22-2020
PROFESSIONAL ENGINEER

PROJECT NO.	WW2030
DESIGNED BY:	RKS, REH
DRAWN BY:	CAM
CHECKED BY:	RKS, REH
DATE MODIFIED:	5-22-2020
DPW CHK:	

SHEET: E-5

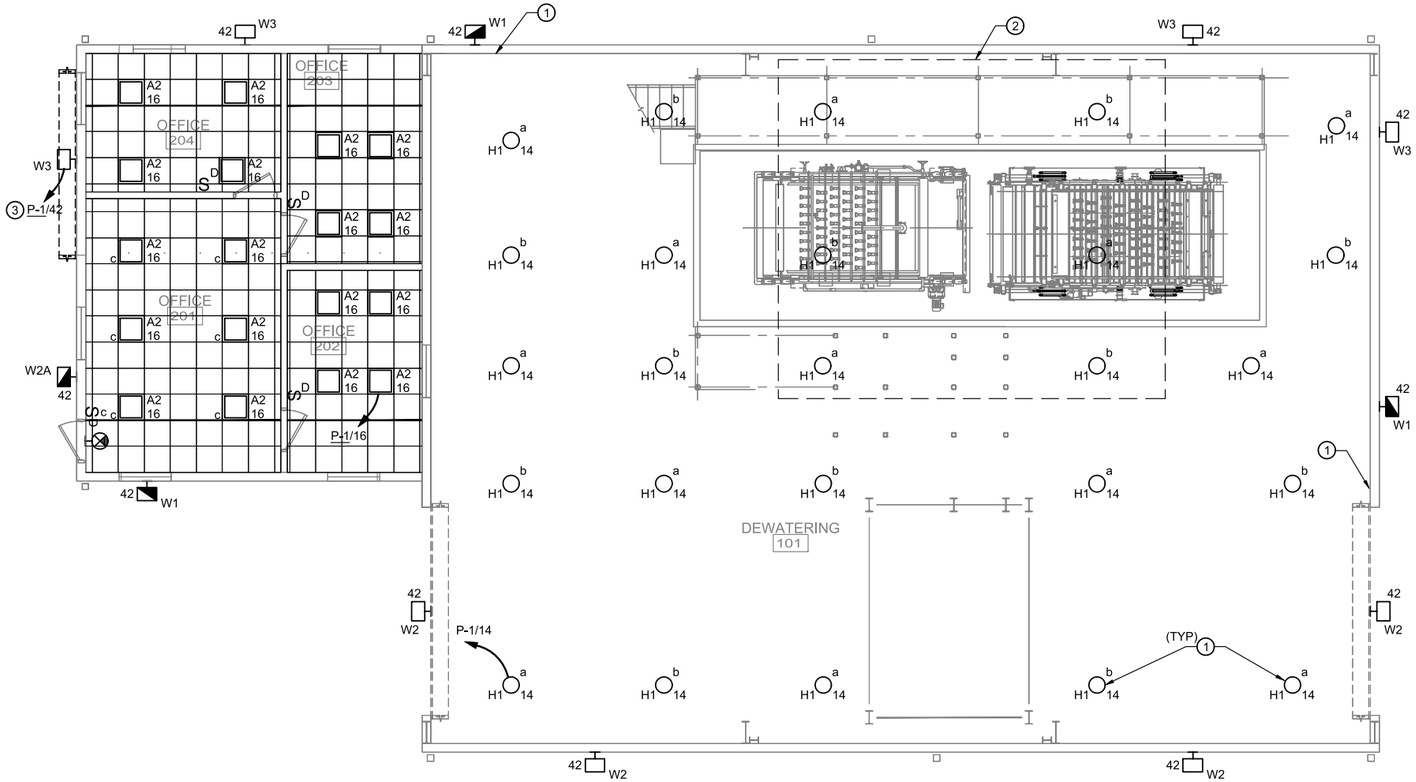

SECOND FLOOR LIGHTING PLAN
Scale 3/16"=1'-0"

GENERAL NOTES:

1. DIMENSIONS ARE BASED ON OWNERS SUPPLIED RECORD DRAWINGS AND MAY VARY FROM ACTUAL CONDITIONS. CONTRACTOR SHALL FIELD VERIFY ALL DIMENSIONS AND ELEVATIONS.
2. REFERENCE ELEVATION: 5145.50 = EXISTING FINISHED FLOOR (0'-0").

KEYED NOTES ◯

1. SWITCHES CONTROLLING LIGHTING IN THIS AREA ARE SHOWN ON THE FIRST FLOOR POWER PLAN, SEE SHEET E-2 FOR LOCATION.
2. MOUNT LIGHTS WITHIN BOUNDARY 18" FROM UNDERSIDE OF DECK.
3. RUN LIGHTS THROUGH LIGHT SWITCH ON FIRST FLOOR.

REVISIONS (OR CHANGE NOTICES)

No.	DESCRIPTION	DATE	BY
1	BID SET	5/22/20	RKS
2			
3			
4			
5			
6			
7			

Designed By: AECOM Imagine it. Delivered. One Park Square, 6501 Americas Pkwy NE, Suite 900, Albuquerque, New Mexico 87110, (505)-855-7500

Designed For: CITY OF RIO RANCHO

WASTEWATER TREATMENT PLANT 2 SOLIDS HANDLING IMPROVEMENTS

SECOND FLOOR LIGHTING PLAN

EUGENE DAVID MOE, NEW MEXICO, 21389, 5-22-2020, PROFESSIONAL ENGINEER

PROJECT NO.	WW2030
DESIGNED BY:	RKS, REH
DRAWN BY:	CAM
CHECKED BY:	RKS, REH
DATE MODIFIED:	5-22-2020
DPW CHK:	

SHEET: E-6

PANEL: L-1 | PHASE: 3 | WIRE: 4 WITH GROUND | LOCATION: OFFICE 103
TYPE: NEMA 1 | MOUNTING: SURFACE
VOLTAGE: 208 / 120 V | MAIN CIRCUIT BREAKER: 150A MCB
SPD: NO | BREAKER TYPE: BOLT ON
BUSSING AMPS: 100 | FED FROM: 45 KVA XFMR VIA P1 | PANEL DEVICE MIN. RATING: 10,000 A RMS SYMMETRICAL

DESCRIPTION	LOAD VA A	LOAD VA B	LOAD VA C	BKR TR	CCT NO	Ø	CCT NO	BKR TR	LOAD VA A	LOAD VA B	LOAD VA C	DESCRIPTION
(EXISTING CKT) RECEPTACLES - SOUTH WALL	720			20	1	A	2	20	960			--
(EXISTING CKT) RECEPTACLES - SOUTH WALL		720		20	3	B	4			960		(EXISTING CKT) EXHAUST FAN
(EXISTING CKT) RECEPTACLES - WORKBENCH			720	20	5	C	6				960	--
(EXISTING CKT) RECEPTACLES - WORKBENCH	720			20	7	A	8	20	360			(EXISTING CKT) 2ND FLOOR A/C
SPARE				20	9	B	10	20		360		(EXISTING CKT) CHART RECORDER
SPARE				20	11	C	12	20			540	(EXISTING CKT) BTHRM LTS/REC CHART ROOM
(EXISTING CKT) RECEPTACLES - WORKBENCH	720			20	13	A	14	20	900			DEWATERING RECS
(EXISTING CKT) ROLL UP DOOR "NORTH"		750		20	15	B	16	20				SPARE
--			750		17	C	18	20			1000	(EXISTING CKT) DRYER
(EXISTING CKT) HWH - HOT WATER HEATER	1500			30	19	A	20	20	1000			POLYMER SYSTEM
--		1500			21	B	22			2400		--
(EXISTING CKT) ROLL UP DOOR "SOUTH"			750	20	23	C	24	30			2400	(EXISTING CKT) COMPRESSOR
--	750				25	A	26		2400			--
FAN COIL UNITS (102,103,105, 201,202,203,204,205)		200		20	27	B	28	20		720		(EXISTING CKT) BELT PRESS CONTROL PANEL
AND BRANCH CIRCUIT SELECTORS			200		29	C	30	20			720	(EXISTING CKT) RECEPTACLES - MAINT SHOP
CONDENSING UNIT (CU-101)	4080			50	31	A	32	20	1212			(2) GAS UNIT HEATERS
3#6, #10 GND, 1"C		4080			33	B	34	20		900		OFFICE - 202
--			4080		35	C	36	20			1212	(2) GAS UNIT HEATERS
OFFICE - 204	900			20	37	A	38	15	450			PIT VALVE (PV-1)
OFFICE - 203		900		20	39	B	40	20			180	BELT PRESS REMOTE PANEL
OFFICE - 201			1080	20	41	C	42	20				SPARE
	9390	8150	7580						7282	5340	7012	

TOTAL CONNECTED VA
PHASE A= 16672
PHASE B= 13490
PHASE B= 14592
SUBTOTAL = 44754 SECTION 1
SECTION 2
TOTAL = 44754 LESS MOTOR STARTING

TOTAL CONNECTED AMPS 124.2 A | MANUFACTURER AND TYPE
TOTAL DEMAND AMPS = 124.2 A | 124.2 A X 125% FUTURE 155.3 A
TOTAL DEMAND VA = 44754 VA X | 125% FUTURE = 55942.5 VA
MOTOR STARTING AMPS 0

NOTE: THIS IS A NEW PANEL. EXISTING TO REMAIN CIRCUITS FROM THE DEMOLISHED PANEL L-1 SHALL BE RELOCATED TO NEW PANEL L-1.

PANEL: (E) P-1 | PHASE: 3 | WIRE: 3 WITH GROUND | LOCATION: OFFICE 103
TYPE: NEMA 1 | MOUNTING: SURFACE
VOLTAGE: 480 / 277 V | MAIN CIRCUIT BREAKER: 200A MCB
SPD: NO | BREAKER TYPE: BOLT ON
BUSSING AMPS: 200 | FED FROM: SITE POWER SUPPLY | PANEL DEVICE MIN. RATING: 18,000 A RMS SYMMETRICAL

	DESCRIPTION	LOAD VA A	LOAD VA B	LOAD VA C	BKR TR	CCT NO	Ø	CCT NO	BKR TR	LOAD VA A	LOAD VA B	LOAD VA C	DESCRIPTION	
	SPARE	0			20	1	A	2	20	2300			--	
	--		0			3	B	4			2300		HOPPER VALVE	
	SPARE			0	20	5	C	6				2300	--	
	--	0				7	A	8	40	8000			--	
	--		15772		70	9	B	10			8000		WASHWATER PANEL	
1 2	NEW PANEL L-1 VIA NEW 45KVA TRANSFORMER			14666		11	C	12				8000	--	
	--	14412				13	A	14	20	2156			LIGHTING - BELT PRESS ROOM	1
	SPACE		0		-	15	B	16	20		1000		LIGHTING - OFFICES	1
	--			7535		17	C	18				7535	--	
1 2	NEW BELT PRESS	8535			60	19	A	20	60	8535			BELT PRESS #2 - WEST	
	--		8535			21	B	22			8535		--	
	SPACE			0	-	23	C	24	R				SHUNT TRIP FOR 18,20,22 - BELT PRESS #2	
	SPACE	0			-	25	A	26	20	0			SPARE	
	SPACE		0		-	27	B	28			0		--	
	--			1080		29	C	30				2105	--	
1 2	MAU-1	1080			75	31	A	32	15	2105			EXHAUST FAN (EF-2) - 5HP	1 2
	--		1080			33	B	34			2105		3#12 + #12G IN 3/4"C.	
	SPACE			0	-	35	C	36	20			0	EXTERIOR AND EMERGENCY LIGHTING	1
		24027	25387	23281						23096	21940	19940		

TOTAL CONNECTED VA
PHASE A= 47123
PHASE B= 47327
PHASE B= 43221
SUBTOTAL = 137671 SECTION 1
SECTION 2
TOTAL = 137671 LESS MOTOR STARTING

TOTAL CONNECTED AMPS 165.6 A | MANUFACTURER AND TYPE
TOTAL DEMAND AMPS = 165.6 A | 165.6 A X 125% FUTURE 207.0 A
TOTAL DEMAND VA = 137671 VA X | 125% FUTURE = 172088.75 VA
MOTOR STARTING AMPS 0

NOTE: THIS IS AN EXISTING PANEL. BOLD AND NOTED CIRCUITS ARE NEW WORK WITHIN PANEL.

KEYED NOTES

1. PROVIDE NEW CIRCUIT BREAKER AS INDICATED.
2. REMOVE EXISTING CIRCUIT BREAKER.
3. SEE DWG. E-1 FOR ADDITIONAL WIRING REQUIREMENTS.
4. 3#4 & 1#10 GND IN 1" C.
5. 3#12 & 1#12 GND IN 3/4" C.
6. 4#2 & 1#8 GND IN 1-1/2" C.
7. REPLACE EXISTING 30-POLE PANEL L-1 WITH NEW 42-POLE PANEL L-1. THIS WORK SHALL BE PERFORMED OFF HOURS AND OVER A WEEKEND. THIS WORK MAY NOT AFFECT THE OPERATIONS OF THE DEWATERING FACILITY.

LIGHT FIXTURE SCHEDULE

TAG	DESCRIPTION	MAKE	MODEL	LAMP	WATTS (W)	VOLTAGE (V)	LUMENS	COLOR (K)	COMMENTS
A1	2 X 4 LOW-PROFILE, FLAT PANEL SURFACE MOUNTED LED	COOPER LIGHTING	24FPSL2SCT3-4000K-MID	LED	41.5	277	4795	4000	
A2	2 X 2 LOW-PROFILE, FLAT PANEL SURFACE MOUNTED LED	COOPER LIGHTING	22SP3440	LED	32.8	277	4200	4000	
C	6" SURFACE MOUNTED LED DOWNLIGHT	COOPER LIGHTING	HALO # SLD612940WH-UNV-JB	LED	14.8	120	1000	4000	
H1, H1EM	18" ROUND LED LOW-BAY	MCGRAW EDISON	TT-C5-LED-E1-MQ	LED	77	277	9604	4000	PENDANT MOUNTED TO RIGID METALLIC CONDUIT FROM CEILING TO 18'-0" AFF, U.O.N.
H1A	18" ROUND LED LOW-BAY	MCGRAW EDISON	TT-C3-LED-E1-WQ	LED	45	277	5782	4000	SURFACE MOUNTED TO UNDERSIDE OF CATWALK/PLATFORM
X	EXIT LIGHT, WET LOCATION	SURE-LITES	LPXW-7-1-R-SD	LED	3.4	277	N/A	N/A	
W1	EXTERIOR AREA LIGHTING WALL PACK WITH PHOTOCELL & EMERGENCY BACKUP	U.S. ARCHITECTURAL LIGHTING	RZR-WM1-PLED-III-20LED-700MA-NW-277-RAL-9005-T-PC+277	LED	44	277	5000	4000	MOUNT FIXTURES OVER EXIT DOORS. PROVIDE FIXTURE MOUNTED PHOTOCELL.
W2, W2A	EXTERIOR AREA LIGHTING WALL PACK WITH PHOTOCELL		RZR-WM3-PLED-III-W-60LED-525MA-NW-277-RAL-9005-T-PC+277	LED	99	277	12000	4000	COORDINATE MOUNTING WITH 'A'-DRAWINGS. PROVIDE FIXTURE MOUNTED PHOTOCELL. PROVIDE EMERGENCY POWER INVERTER (LVS MODEL#CEPS-110W) FOR 'W2A' FIXTURE MOUNTED IN INTERIOR CEILING NEAR FIXTURE.
W3	EXTERIOR AREA LIGHTING WALL PACK WITH PHOTOCELL		RZR-WM1-PLED-II-20LED-350MA-NW-277-RAL-9005-T-PC+277	LED	23	277	2800	4000	COORDINATE MOUNTING WITH 'A'-DRAWINGS. PROVIDE FIXTURE MOUNTED PHOTOCELL.

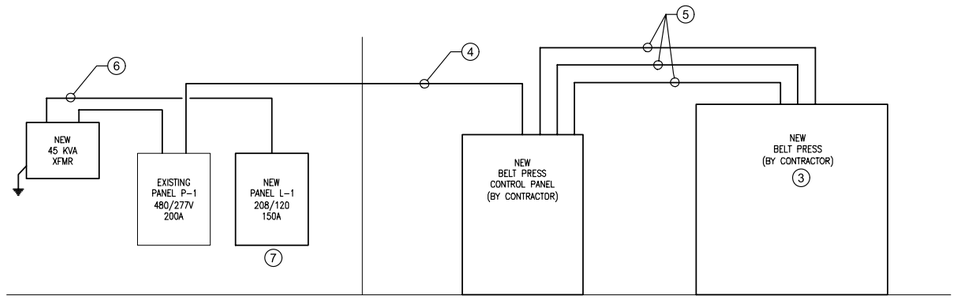

ELECTRICAL RISER DIAGRAM
No Scale

No.	DESCRIPTION	DATE	BY
1	BID SET	5/22/20	RKS
2			
3			
4			
5			
6			
7			

REVISIONS (OR CHANGE NOTICES)

Designed By: AECOM Imagine it. Delivered. 6501 America's Pkwy NE, Suite 900 Albuquerque, New Mexico 87110 (505)-855-7500

Designed For: CITY OF RIO RANCHO

WASTEWATER TREATMENT PLANT 2 SOLIDS HANDLING IMPROVEMENTS

RISER DIAGRAM AND SCHEDULES

EUGENE DAVID MOE NEW MEXICO 21369 6-22-2020 PROFESSIONAL ENGINEER

PROJECT NO.	WW2030
DESIGNED BY:	RKS, REH
DRAWN BY:	CAM
CHECKED BY:	RKS, REH
DATE MODIFIED:	5-22-2020
DPW CHK:	

SHEET: E-7

PROCESS FLOW AND PIPING AND INSTRUMENTATION DIAGRAM LEGEND

(ALL SYMBOLS SHOWN ARE NOT NECESSARILY USED ON THE DRAWINGS)

LINE TYPES

SYMBOL	DESCRIPTION
———	PROCESS FLOW LINE
———	INSTRUMENT SUPPLY OR CONNECTION TO PROCESS
—/—/—	UNDEFINED SIGNAL
—//—//—	PNEUMATIC SIGNAL
- - - - - -	ELECTRIC SIGNAL
—L—L—	HYDRAULIC SIGNAL
—X—X—	CAPILLARY TUBE
—~—~—	ELECTROMAGNETIC OR SONIC SIGNAL (GUIDED)
~ ~	ELECTROMAGNETIC OR SONIC SIGNAL (NOT GUIDED)
—o—o—	INTERNAL SYSTEM LINK (SOFTWARE OR DATA LINK)
—•—•—	MECHANICAL LINK
OPTIONAL BINARY (ON–OFF) SYMBOLS	
—X—X—	PNEUMATIC BINARY SIGNAL
- -\- -\- -	ELECTRIC BINARY SIGNAL
—E—E—	ELECTRICAL HEAT TRACING
—S—S—	STEAM HEAT TRACING
XX	FP – FLOOR PENETRATION RP – ROOF PENETRATION WP – WALL PENETRATION SB – SYSTEM BREAK

ABBREVIATIONS

AI – ANALOG INPUT
AO – ANALOG OUTPUT
DI – DIGITAL INPUT
DO – DIGITAL OUTPUT

INSTRUMENT/FUNCTION SYMBOLS

	PRIMARY LOCATION NORMALLY ACCESSIBLE TO OPERATOR	FIELD MOUNTED	AUXILIARY LOCATION NORMALLY ACCESSIBLE TO OPERATOR	AUXILIARY LOCATION NORMALLY INACCESSIBLE TO OPERATOR
DISCRETE INSTRUMENTS	XX / XXX	XX / XXX	XX / XXX	XX / XXX
SHARED DISPLAY, SHARED CONTROL	XX / XXX	XX / XXX	XX / XXX	XX / XXX
COMPUTER FUNCTION	XX / XXX	XX / XXX	XX / XXX	XX / XXX
PROGRAMMABLE LOGIC CONTROL	XX / XXX	XX / XXX	XX / XXX	XX / XXX

XX / XXX FLOW INDICATOR

XX / XXX XX / XXX INSTRUMENTS SHARING COMMON HOUSING

X / XX PANEL MOUNTED PATCHBOARD POINT 12

INSTRUMENTATION IDENTIFICATION TABLE

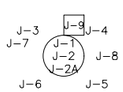

NOTE: INSTRUMENTATION FUNCTION IDENTIFIERS (J–1) AND FUNCTION SYMBOLS PER ANSI/ISA S5.1.

J–1 COMPONENT FUNCTION NUMBER
J–2 COMPONENT SEQUENCE NUMBER
J–2A COMPONENT SEQUENCE # CONT'D
J–3 VENDOR DESIGNATION
J–4 PANEL NUMBER
J–5 APPLICABLE NOTES
J–6 SYSTEM ACRONYM
J–7 ASME TEST SYMBOL FOR TEST ONLY OR TEST PLUS NORMAL USE
J–8 SET–POINT(S)
J–9 FUNCTION (SEE INSTRUMENT/FUNCTION SYMBOLS)

VALVE & INSTRUMENTATION FUNCTION IDENTIFIERS (SELECTED)

FIRST–LETTERS	INITIATING, MEASURED, OR CONTROLLED VARIABLE	CONTROLLERS			VALVES	READOUT DEVICE		SWITCHES AND ALARM DEVICES *			TRANSMITTERS			SOLENOIDS, RELAYS, COMPUTING DEVICES	PRIMARY ELEMENT	TEST POINT	WELL OR PROBE	VIEWING DEVICE, GLASS	SAFETY DEVICE	FINAL ELEMENT
		RECORDING	INDICATING	BLIND		RECORDING	INDICATING	HIGH**	LOW	COMB	RECORDING	INDICATING	BLIND							
A	ANALYSIS	ARC	AIC	AC		AR	AI	ASH	ASL	ASHL	ART	AIT	AT	AY	AE	AP	AW			AV
B	BURNER/ COMBUSTION	BRC	BIC	BC		BR	BI	BSH	BSL	BSHL	BRT	BIT	BT	BY	BE		BW	BG		BZ
C	CONDUCTIVITY		CIC	CC										CCD	CE					
D	USER'S CHOICE																			
E	VOLTAGE	ERC	EIC	EC		ER	EI	ESH	ESL	ESHL	ERT	EIT	ET	EY	EE					EZ
F	FLOW RATE	FRC	FIC	FC	FCV FICV	FR	FI	FSH	FSL	FSHL	FRT	FIT	FT	FY	FE	FP		FG		FV
FQ	FLOW QUANTITY	FQRC	FQIC			FQR	FQI	FQSH	FQSL			FQIT	FQT	FQY	FQE					FQV
FF	FLOW RATIO	FFRC	FFIC	FFC		FFR	FFI	FFSH	FFSL						FE					FFV
G	USER'S CHOICE																			
H	HAND		HIC	HC	HV					HS										HV
I	CURRENT	IRC	IIC			IR	II	ISH	ISL	ISHL	IRT	IIT	IT	IY	IE					IZ
J	POWER	JRC	JIC	ARC		JR	JI	JSH	JSL	JSHL	JRT	JIT	JT	JY	JE					JV
K	TIME	KRC	KIC	KC	KCV	KR	KI	KSH	KSL	KSHL	KRT	KIT	KT	KY	KE					KV
L	LEVEL	LRC	LIC	LC	LCV	LR	LI	LSH	LSL	LSHL	LRT	LIT	LT	LY	LE		LW	LG		LV
M	MOISTURE/ HUMIDITY						MI						MT							
N	USER'S CHOICE																			
O	USER'S CHOICE																			
P	PRESSURE VACUUM	PRC	PIC	PC	PCV	PR	PI	PSH	PSL	PSHL	PRT	PIT	PT	PY	PE	PTP			PSV PSE	PV
PD	PRESSURE DIFFERENTIAL	PDRC	PDIC	PDC	PDCV	PDR	PDI	PDSH	PDSL		PDRT	PDIT	PDT	PDY	PE	PTP				PDV
Q	QUANTITY	QRC	QIC			QR	QI	QSH	QSL	QSHL	QRT	QIT	QT	QY	QE					QZ
R	RADIATION	RRC	RIC	RC		RR	RI	RSH	RSL	RSHL	RRT	RIT	RT	RY	RE		RW			RZ
S	SPEED	SRC	SIC	SC	SCV	SR	SI	SSH	SSL	SSHL	SRT	SIT	ST	SY	SE					SV
T	TEMPERATURE	TRC	TIC	TC	TCV	TR	TI	TSH	TSL	TSHL	TRT	TIT	TT	TY	TE	TP	TW		TSE	TV
T	TEMPERATURE DIFFERENTIAL	TDRC	TDIC	TDC	TDCV	TDR	TDI	TDSH	TDSL		TDRT	TDIT	TDT	TDY	TDE	TDP TP	TDW TW			TDV
U	MULTIVARIABLE					UR	UI							UY						UV
V	MACHINERY VIBRATION ANALYSIS					VR	VI	VSH VS	VSL	VSHL	VRT	VIT	VT	VY	VE					VZ
W	WEIGHT FORCE	WRC	WIC	WC	WCV	WR	WI	WSH	WSL	WSHL	WRT	WIT	WT	WY	WE					WZ
WD	WEIGHT FORCE DIFFERENTIAL	WDRC	WDIC	WDC	WDCV	WDR	WDI	WDSH	WDSL		WDRT	WDIT	WDT	WDY	WDE					WDZ
X	USER'S CHOICE																			
Y	EVENT STATE PRESENCE		YIC	YC		YR	YI	YSH	YSL				YT	YY	YE					YZ
Z	POSITION DIMENSION	ZRC	ZIC	ZC	ZCV	ZR	ZI	ZSH	ZSL	ZSHL	ZRT	ZIT	ZT	ZY	ZE					ZV
ZD	GAUGING DEVIATION	ZDRC	ZDIC	ZDC	ZDCV	ZDR	ZDI	ZDSH	ZDSL		ZDRT	ZDIT	ZDT	ZDY	ZDE					ZDV

NOTE:
THIS TABLE IS NOT ALL–INCLUSIVE.

* A, ALARM, THE ANNUNCIATING DEVICE, MAY BE USED IN THE SAME FASHION AS S, SWITCH, THE ACTING DEVICE.

** THE LETTERS H AND L MAY BE OMITTED IN THE UNDEFINED CASE.

(ALL SYMBOLS SHOWN ARE NOT NECESSARILY USED ON THE DRAWINGS)

OTHER POSSIBLE COMBINATIONS:

FO	(RESTRICTION ORIFICE)	PFR	(RATIO)
FRK, HIK	(CONTROL STATIONS)	KQI	(RUNNING TIME INDICATOR)
FX	(ACCESSORIES)	QQI	(INDICATING COUNTER)
TJR	(SCANNING RECORDER)	WKIC	(RATE–OF–WEIGHT–LOSS CONTROLLER)
LLH	(PILOT LIGHT)	HMS	(HAND MOMENTARY SWITCH)

INSTRUMENT/FUNCTION SYMBOLS

SYMBOL	DESCRIPTION
X	P = PURGE OR FLUSHING DEVICE R = RESET FOR LATCH–TYPE ACTUATOR
X	S = SOLENOID D = DIGITAL P = PILOT T = TRAP M = MAGNETIC FLOWMETER SP = SET POINT
√	ROOT EXTRACTION
±	BIAS
X	MULTIPLY
>	HIGH SELECTING
<	LOW SELECTING
≯	HIGH LIMITING
≮	LOW LIMITING
K	PROPORTIONAL
–K	REVERSE PROPORTIONAL
+	SUMMING
÷	DIVIDING
CA–1	EQUIPMENT TAG
SC SS	SC = SAFETY CLASS SS = SAFETY SIGNIFICANT

PLAN BREAKS & CONTINUATION FLAGS

SYMBOL	DESCRIPTION
Y# X OR X Y#	PIPE OR WIRE IS CONTINUED ON DRAWING X (INCLUDING SHEET NUMBER), GRID COORDINATE (Y#); FLOW IS TO THAT DRAWING.
X Y# OR Y# X	PIPE OR WIRE IS CONTINUED ON DRAWING X (INCLUDING SHEET NUMBER), GRID COORDINATE (Y#); FLOW IS FROM THAT DRAWING.
X Y#	PIPE OR WIRE IS CONTINUED ON DRAWING X (INCLUDING SHEET NUMBER), GRID COORDINATE (Y#); FLOW IS IN BOTH DIRECTIONS

INTERLOCK SYMBOL

I / X — HARD WIRED INTERLOCK
INTERLOCK NUMBER

No.	DESCRIPTION	DATE	BY
1	BID SET	5/22/20	RKS
2			
3			
4			
5			
6			
7			

REVISIONS (OR CHANGE NOTICES)

Designed By: AECOM Imagine it. Delivered. One Park Square, 6501 Americas Pkwy NE, Suite 900, Albuquerque, New Mexico 87110 (505)–855–7500

Designed For: CITY OF RIO RANCHO

WASTEWATER TREATMENT PLANT 2 SOLIDS HANDLING IMPROVEMENTS

GENERAL INSTRUMENT & CONTROL SYMBOLS

RIPAN K. SAHA, NEW MEXICO, 24280, PROFESSIONAL ENGINEER, 5-22-2020

PROJECT NO.	WW2030
DESIGNED BY:	RKS, REH
DRAWN BY:	CAM
CHECKED BY:	RKS, REH
DATE MODIFIED:	5–22–2020
DPW CHK:	

SHEET: I–01

DWG: L:\60610126 Rio Rancho – Solids Dewatering Design\300–CAD–GIS\910–CAD\20–SHEETS\I–01.dwg USER: jesse.higgins
DATE: May 22, 2020 2:46pm XREFS: RR–AECOM–FW–BDR IMAGES: imagine_it._delivered._block_300dpi.jpg

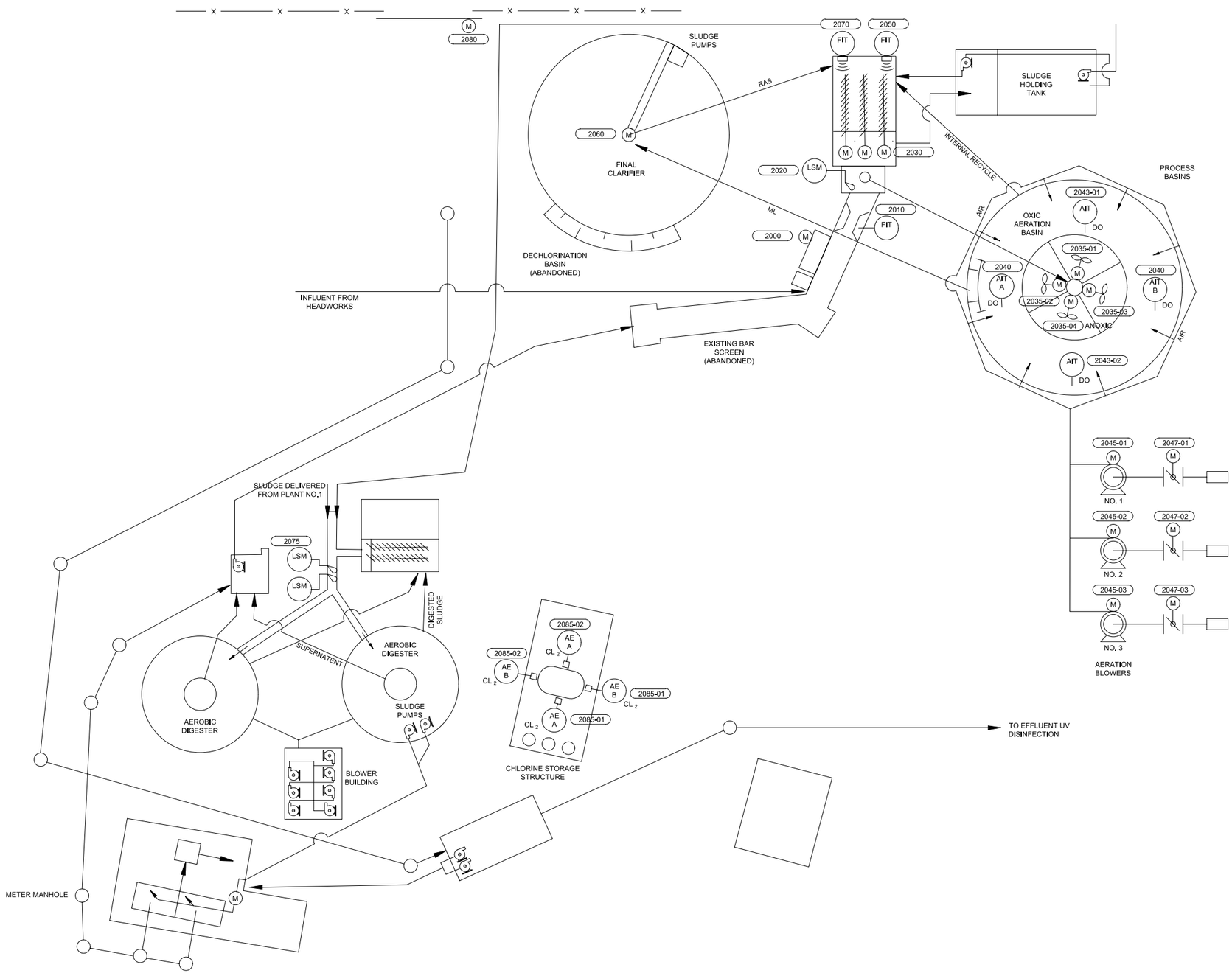

No.	DESCRIPTION	DATE	BY
1	BID SET	5/22/20	RKS
2			
3			
4			
5			
6			
7			

REVISIONS (OR CHANGE NOTICES)

Designed By: AECOM Imagine it. Delivered. One Park Square 6501 Americas Pkwy NE, Suite 900 Albuquerque, New Mexico 87110 (505)-855-7500

Designed For: CITY OF RIO RANCHO

WASTEWATER TREATMENT PLANT 2 SOLIDS HANDLING IMPROVEMENTS

PROCESS & INSTRUMENTATION DIAGRAM – EXISTING

RIPAN K. SAHA NEW MEXICO 24260 PROFESSIONAL ENGINEER 5-22-2020

PROJECT NO.	WW2030
DESIGNED BY:	RKS, REH
DRAWN BY:	CAM
CHECKED BY:	RKS, REH
DATE MODIFIED:	5-22-2020
DPW CHK:	

SHEET: I-02

DWG: L:\ACAD\WW2030 Rio Rancho - Solids Dewatering Design\400-CAD-GIS\410-CAD\20-SHEETS\I-02.dwg USER: jesse.higgins
DATE: May 22, 2020 - 2:47pm XREFS: Rec 4&5.dwg Rec 4&5 Hatch.dwg MASS: Image_01_Aerobic_Digest_300dpi.jpg

GENERAL NOTES:

1. EACH SIGNAL SHALL BE 2#15, UNLESS OTHERWISE NOTED.

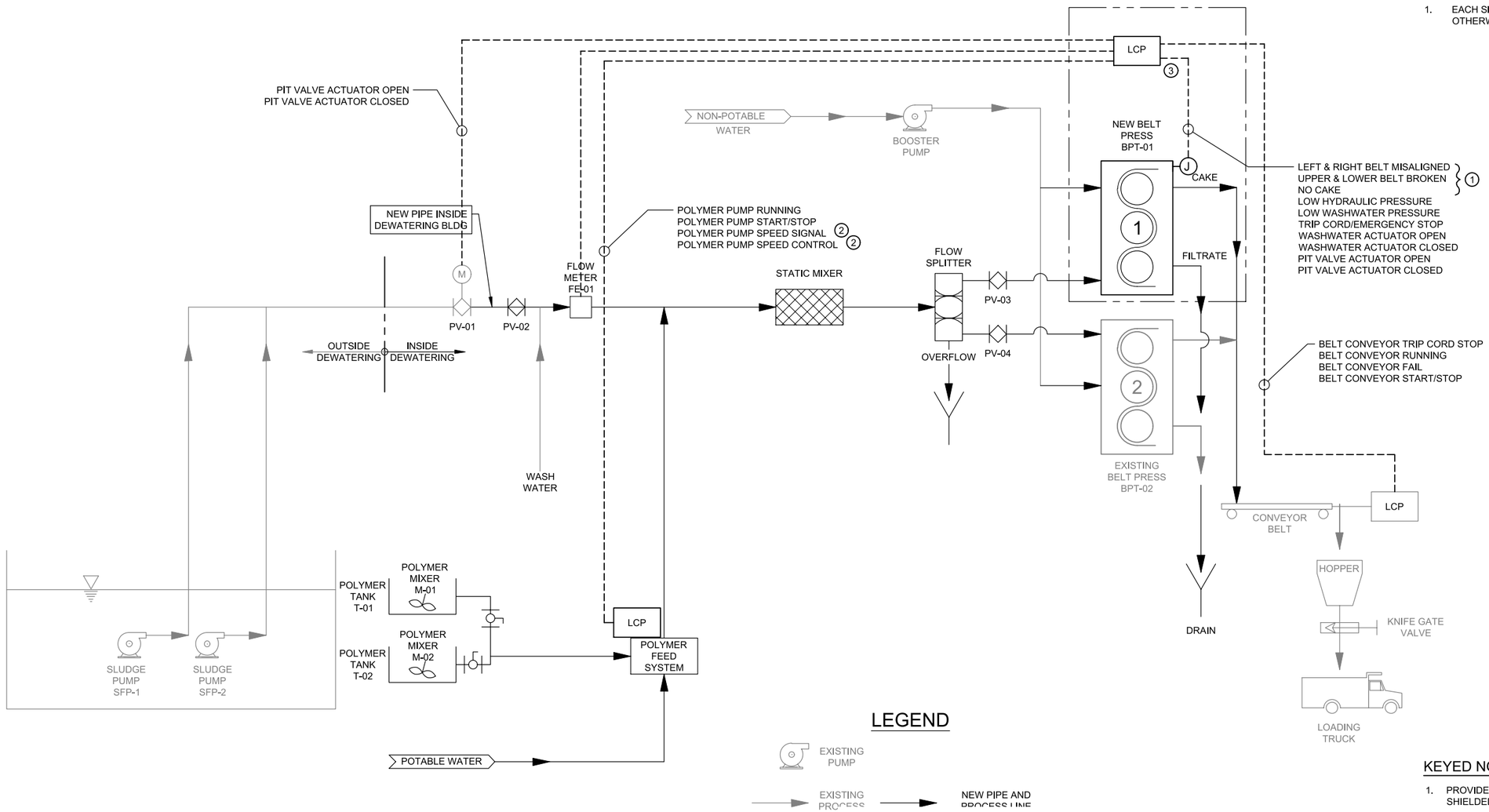

LEGEND

EXISTING PUMP

EXISTING PROCESS

NEW PIPE AND PROCESS LINE

KEYED NOTES ◯

1. PROVIDE A THREE CONDUCTOR TWISTED, SHIELDED CABLE FOR SELECTED OUTPUTS.
2. PROVIDE A TWO CONDUCTOR TWISTED, SHIELDED CABLE FOR SELECTED PUMP SPEED SIGNALS.
3. PROVIDE LCD TOUCH SCREEN AND WIRELESS TABLET CONTROL AND MONITORING.

No.	DESCRIPTION	DATE	BY
1	BID SET	5/22/20	RKS
2			
3			
4			
5			
6			
7			

REVISIONS (OR CHANGE NOTICES)

Designed By: AECOM Imagine it. Delivered. One Park Square, 6501 America Pkwy NE, Suite 900, Albuquerque, New Mexico 87110, (505)-855-7500

Designed For: CITY OF RIO RANCHO

WASTEWATER TREATMENT PLANT 2 SOLIDS HANDLING IMPROVEMENTS

CONTROL P&ID

RIPAN K. SAHA, NEW MEXICO, 24280, PROFESSIONAL ENGINEER, 5-22-2020

PROJECT NO.	WW2030
DESIGNED BY:	RKS, REH
DRAWN BY:	CAM
CHECKED BY:	RKS, REH
DATE MODIFIED:	5-22-2020
DPW CHK:	

SHEET: I-03

DWG: L:\WW2030\Rio Rancho - Solids Dewatering Design\Wide-CAD-GIS\Plot-CAD\I-03.dwg USER: Jesse Higgins
DATE: May 22, 2020 2:42pm XREFS: Project_Standard Block_30Scale.dwg

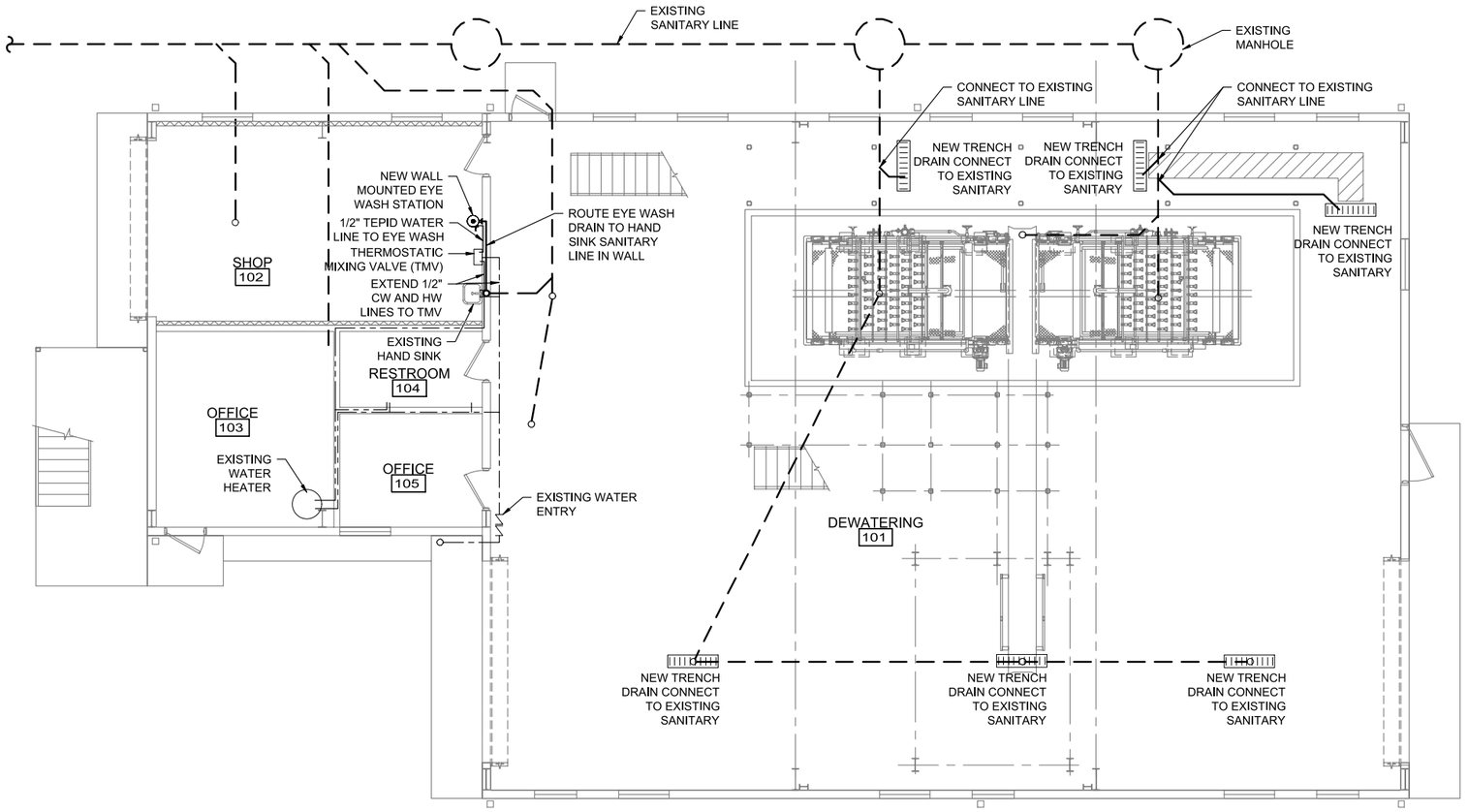

PLUMBING FIRST FLOOR PLAN

Scale 3/16"=1'-0"

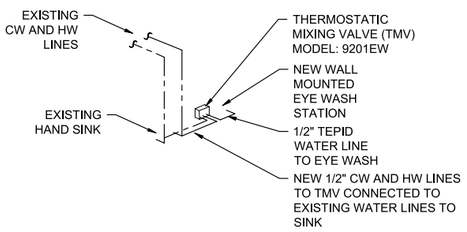

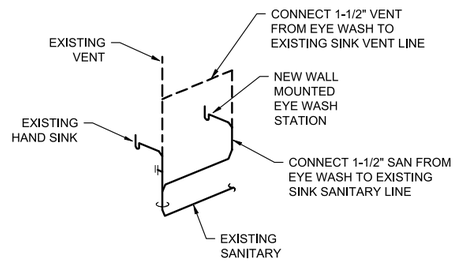

PLUMBING ISOMETRICS

N.T.S.

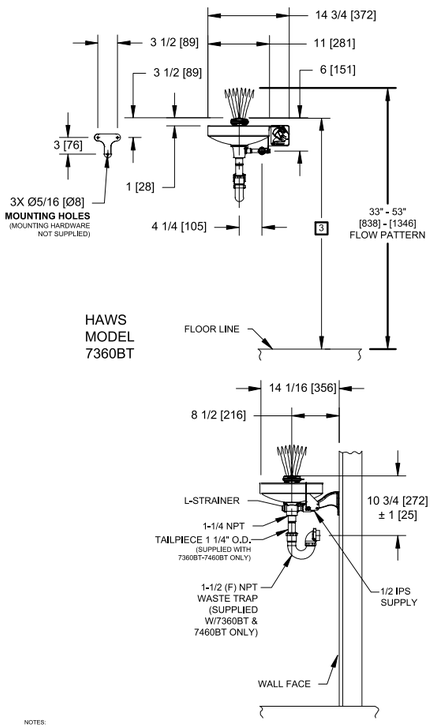

NOTES:

1. METRIC DIMENSIONS ARE IN BRACKETS [X].
2. TO COMPLY WITH ANSI Z358.1-2014 FOR EMERGENCY EYEWASH OR EYE/FACE WASH: EYEWASH OR EYE/FACE WASH SHALL BE POSITIONED SUCH THAT FLUSHING FLUID PATTERN IS NOT LESS THEN 33" (838mm) AND NO GREATER THAN 53" (1346mm) FROM SURFACE ON WHICH USER STANDS, AND 6.0" (153 mm) MINIMUM FROM WALL OR NEAREST OBSTRUCTION.
3. HEIGHT IS DETERMINED BY WATER FLOW PATTERN SHOWN, WHICH IN TURN, IS DEPENDENT ON INLINE SUPPLY PRESSURE.
4. WHEN INSTALLING THIS UNIT, LOCAL, STATE, OR FEDERAL CODES SHOULD BE ADHERED TO FOR INSTALLATION DIMENSIONS (LOCATIONS), WASTE AND SUPPLY REQUIREMENTS OTHER THAN SHOWN.
5. DIMENSIONS MAY VARY BY ± 1/2 [13].

1 P-1 WALL MOUNTED EMERGENCY EYE/FACE WASH

NTS

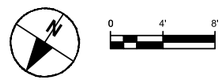

No.	DESCRIPTION	DATE	BY
1	BID SET	5/22/20	RKS
2			
3			
4			
5			
6			
7			

REVISIONS (OR CHANGE NOTICES)

Designed By: AECOM Imagine it. Delivered. 6501 Americas Pkwy NE, Suite 900 Albuquerque, New Mexico 87110 (505)-855-7500

Designed For: CITY OF RIO RANCHO

WASTEWATER TREATMENT PLANT 2 SOLIDS HANDLING IMPROVEMENTS

PLUMBING PLAN, ISOMETRICS AND DETAILS

RIPAN K. SAHA NEW MEXICO 24280 PROFESSIONAL ENGINEER 5-22-2020

PROJECT NO.	WW2030
DESIGNED BY:	RKS, REH
DRAWN BY:	CAM
CHECKED BY:	RKS, REH
DATE MODIFIED:	5-22-2020
DPW CHK:	

SHEET: P-1

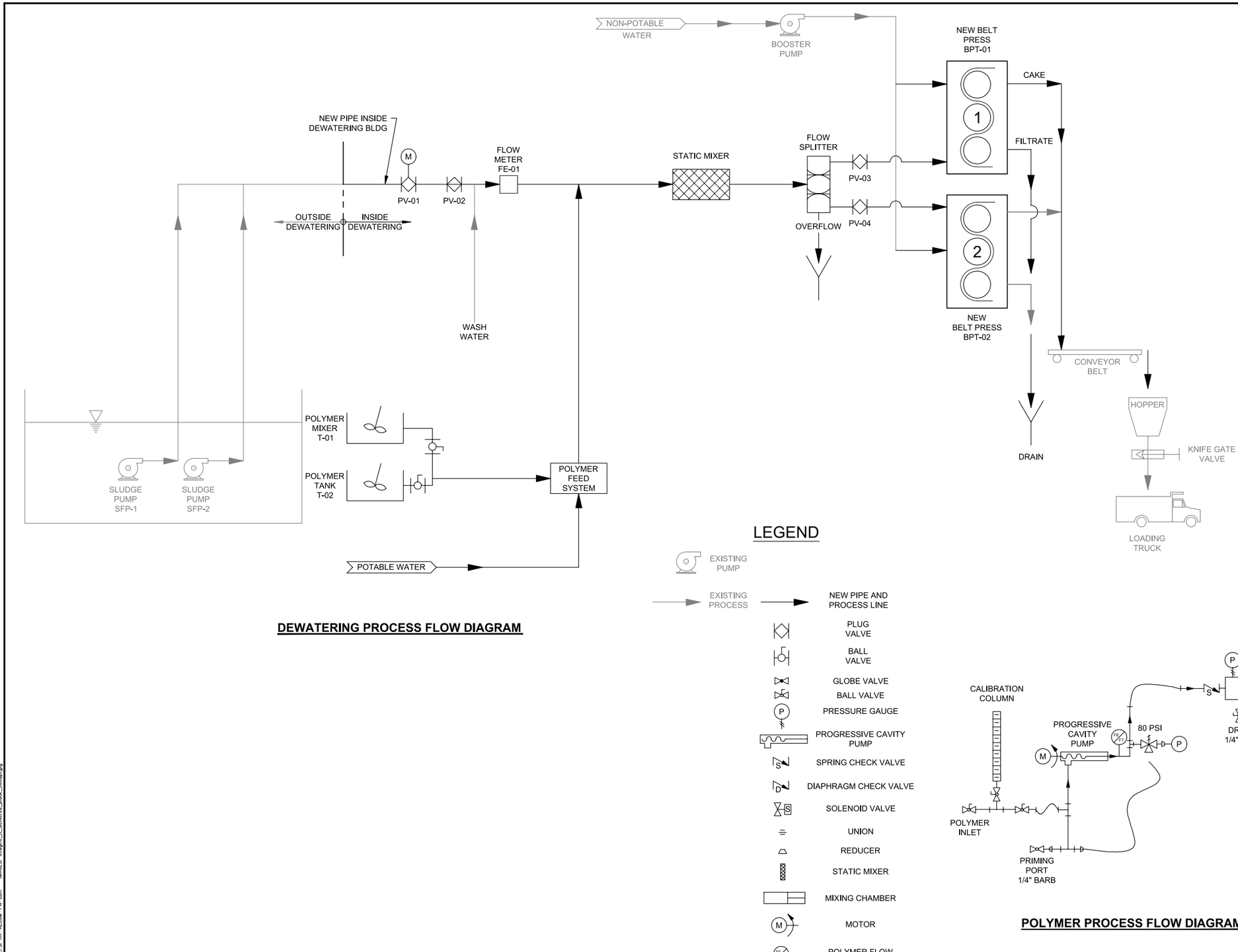

DEWATERING PROCESS FLOW DIAGRAM

LEGEND

- EXISTING PUMP
- EXISTING PROCESS
- NEW PIPE AND PROCESS LINE
- PLUG VALVE
- BALL VALVE
- GLOBE VALVE
- BALL VALVE
- PRESSURE GAUGE
- PROGRESSIVE CAVITY PUMP
- SPRING CHECK VALVE
- DIAPHRAGM CHECK VALVE
- SOLENOID VALVE
- UNION
- REDUCER
- STATIC MIXER
- MIXING CHAMBER
- MOTOR
- POLYMER FLOW MEASUREMENT
- CALIBRATION COLUMN
- PRESSURE RELIEF VALVE

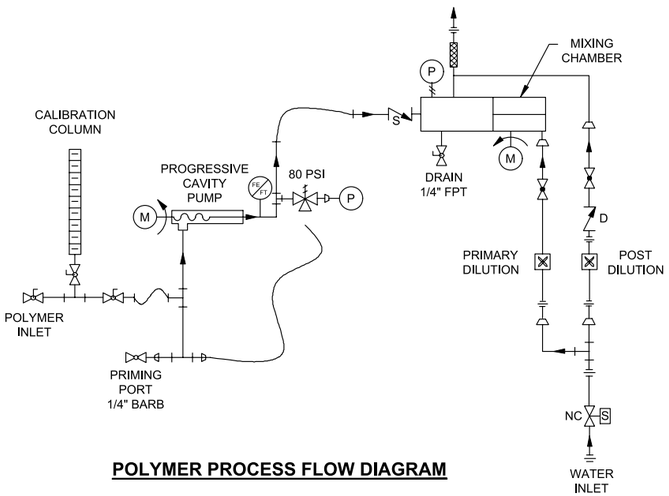

POLYMER PROCESS FLOW DIAGRAM

No.	DESCRIPTION	DATE	BY
1	BID SET	5/22/20	RKS

REVISIONS (OR CHANGE NOTICES)

Designed By: AECOM Imagine it. Delivered. One Park Square, 6501 Americas Pkwy NE, Suite 900, Albuquerque, New Mexico 87110, (505)-855-7500

Designed For: CITY OF RIO RANCHO

WASTEWATER TREATMENT PLANT 2 SOLIDS HANDLING IMPROVEMENTS

PROCESS FLOW DIAGRAM

RIPAN K. SAHA, NEW MEXICO, 24260, PROFESSIONAL ENGINEER, 5-22-2020

PROJECT NO.	WW2030
DESIGNED BY:	RKS, REH
DRAWN BY:	CAM
CHECKED BY:	RKS, REH
DATE MODIFIED:	5-22-2020
DPW CHK:	

SHEET: G-07A

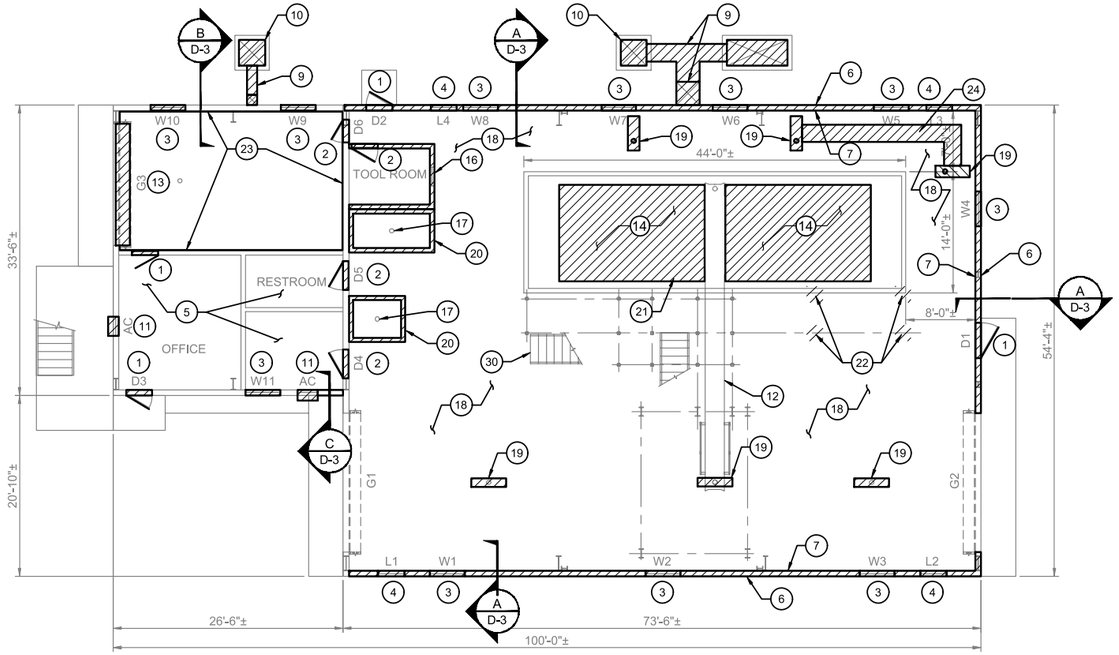

FIRST FLOOR PLAN
Scale 1/8"=1'-0"

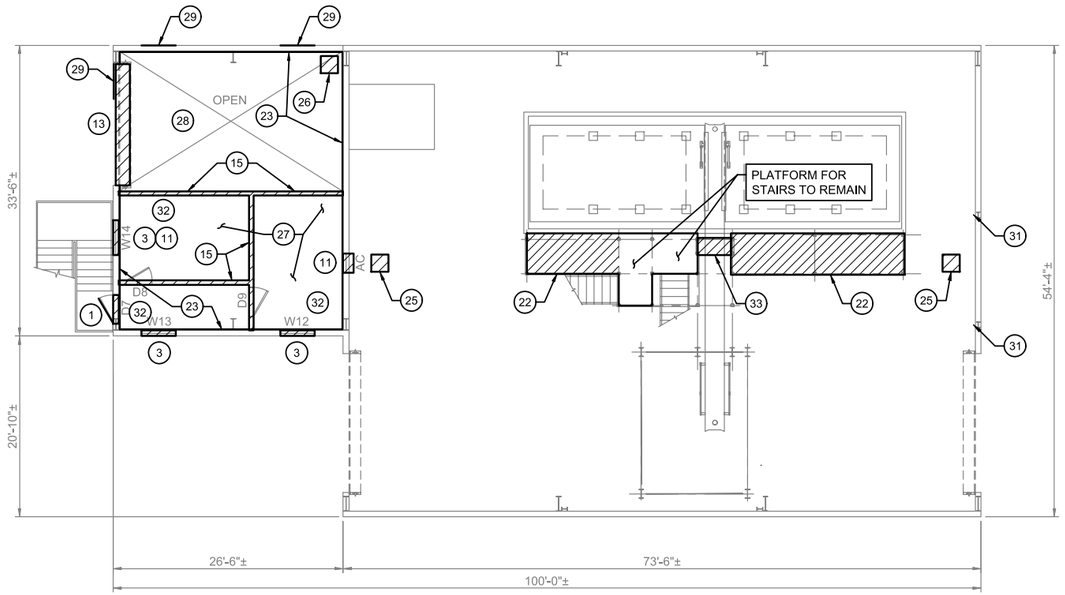

SECOND FLOOR PLAN
Scale 1/8"=1'-0"

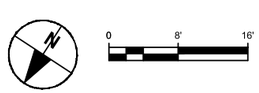

GENERAL NOTES:

1. DIMENSIONS SHOWN MAY VARY FROM ACTUAL CONDITIONS. CONTRACTOR SHALL FIELD VERIFY ALL DIMENSIONS AND ELEVATIONS.
2. CONTRACTOR SHALL COORDINATE WITH THE PLANT OPERATORS FOR ALL NON-STATIONARY ITEMS TO BE REMOVED FROM THE OFFICE AREAS, TOOL ROOM, AND WORKSHOP AT LEAST TWO(2) WEEKS PRIOR TO THE CONSTRUCTION START

KEYED NOTES

1. REMOVE AND DISPOSE OF EXISTING METAL DOOR, DOOR FRAME AND THRESHOLD.
2. REMOVE AND DISPOSE OF EXISTING WOOD DOOR, DOOR FRAME AND THRESHOLD.
3. REMOVE AND DISPOSE OF EXISTING WINDOW AND FRAME.
4. REMOVE AND DISPOSE OF EXISTING LOUVER.
5. REMOVE AND DISPOSE OF EXISTING SHEET VINYL FLOOR COVERING.
6. REMOVE AND REUSE OF EXISTING EXTERIOR METAL WALL PANELS TO 7'-4" ABOVE FINISHED FLOOR OF DEWATERING FACILITY, SEE A/D-3.
7. REMOVE AND DISPOSE OF EXISTING INTERIOR WALL PANELS, SEE A/D-3.
8. NOT USED.
9. REMOVE AND DISPOSE OF EXISTING HVAC DUCTS.
10. REMOVE AND DISPOSE OF EXISTING AIR COOLER UNIT.
11. REMOVE AND DISPOSE OF EXISTING AC UNIT - WINDOW TYPE.
12. EXISTING CONVEYOR BELT SYSTEM TO REMAIN.
13. REMOVE AND DISPOSE OF EXISTING METAL ROLL-UP DOOR.
14. REMOVE AND DISPOSE EXISTING BELT FILTER PRESS. DEMO (6) EXISTING CONCRETE PEDESTALS SUPPORTING EXISTING BELT PRESS. CUT DOWELS FLUSH W/ TOP OF SLAB. PAINT EXPOSED REBAR WITH EPOXY PAINT, (2) COATS MIN.
15. REMOVE EXISTING STUD WALLS.
16. REMOVE AND DISPOSE OF EXISTING TOOL ROOM.
17. EXISTING DRAINS TO REMAIN.
18. REMOVE EXISTING FLOOR COATING AND PREPARE CONCRETE SURFACE TO RECEIVE NEW COATING/GROUT.
19. SAWCUT AND REMOVE CONCRETE FOR NEW 4'-0" TRENCH DRAIN. REMOVE FLOOR DRAIN IF PRESENT.
20. REMOVE AND DISPOSE OF CONCRETE CURB.
21. EXISTING FLOOR COATING TO REMAIN UNDER EXISTING PRESS INSIDE CURB AREA.
22. REMOVE AND DISPOSE OF EXISTING PORTION OF PLATFORM AND SUPPORT SYSTEM.
23. REMOVE AND DISPOSE DRY WALL, CLEAN OUT ALL DIRT, DEBRIS, RODENT NESTS, ETC. FROM WALL
24. SAWCUT & REMOVE CONCRETE FOR NEW DRAIN LINE.
25. REMOVE AND DISPOSE EXISTING HEATER. VENT TO REMAIN FOR NEW HEATER.
26. REMOVE AND DISPOSE EXISTING HEATER. CAP AND SEAL EXISTING VENT.
27. REMOVE AND DISPOSE EXISTING CARPET FLOORING.
28. REMOVE AND DISPOSE DRY WALL CEILING. SEE B/D-3 FOR SIMILAR.
29. REMOVE EXTERIOR METAL PANEL FOR NEW WINDOW.
30. REMOVE STAIRS, IF NEEDED TO REMOVE THE EXISTING BELT PRESS. RE-INSTALL THE STAIRS AFTER NEW PRESS IS INSTALLED.
31. WIND COLUMNS - FIELD VERIFY LOCATIONS, IF PRESENT, NOTIFY ENGINEER.
32. REMOVE DRY WALL CEILING, HAT CHANNELS, AND INSULATION.
33. REMOVE AND DISPOSE PLATFORM OVER CONVEYOR BELT.

No.	DESCRIPTION	DATE	BY
1	BID SET	5/22/20	RKS
2			
3			
4			
5			
6			
7			

REVISIONS (OR CHANGE NOTICES)

Designed By: AECOM Imagine it. Delivered. 6501 America Pkwy NE, Suite 900 Albuquerque, New Mexico 87110 (505)-855-7500

Designed For: CITY OF RIO RANCHO

WASTEWATER TREATMENT PLANT 2 SOLIDS HANDLING IMPROVEMENTS

DEWATERING FACILITY DEMOLITION PLANS

RIPAN K. SAHA NEW MEXICO 24260 5-22-2020 PROFESSIONAL ENGINEER

PROJECT NO.	WW2030
DESIGNED BY:	RKS, REH
DRAWN BY:	CAM
CHECKED BY:	RKS, REH
DATE MODIFIED:	5-22-2020
DPW CHK:	

SHEET: D-1A

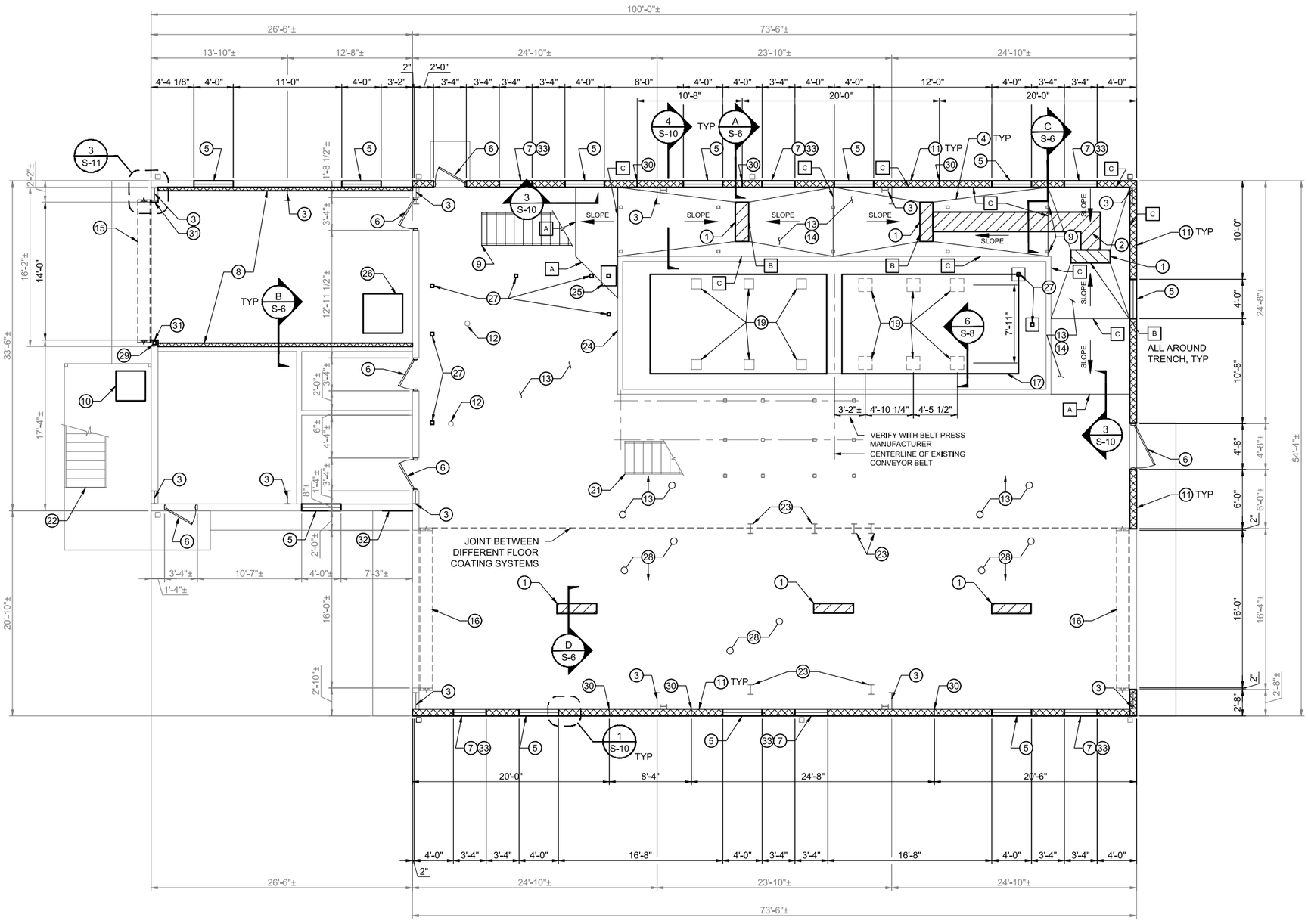

GENERAL NOTES:

1. DIMENSIONS ARE BASED ON OWNERS SUPPLIED RECORD DRAWINGS AND MAY VARY FROM ACTUAL CONDITIONS. CONTRACTOR SHALL FIELD VERIFY ALL DIMENSIONS AND ELEVATIONS.
2. REFERENCE ELEVATION: 5150.01 = EXISTING FINISHED FLOOR (0'-0").

KEYED NOTES ◯

1. SAWCUT AND REMOVE CONCRETE FOR NEW TRENCH DRAIN, SEE PLUMBING.
2. SAWCUT AND REMOVE CONCRETE FOR DRAINLINE TO NEW TRENCH, SEE PLUMBING.
3. EXISTING METAL BUILDING FRAME TO REMAIN.
4. LINE OF FLOOR SLOPE.
5. WINDOW, SEE ARCH.
6. DOOR, SEE ARCH.
7. LOUVER, SEE HVAC.
8. NEW GALVANIZED 4" 16 GA. STUD BEARING WALL WITH STUDS @ 2'-0" O.C. MAX. AND DOUBLE STUDS AT EACH DECK BEAM.
9. METAL PLATFORM, STAIRS, AND SUPPORT SYSTEM, SEE SHEETS S-7 AND S-8.
10. HVAC SYSTEM, SEE HVAC.
11. 8" CMU WALL TO 7'-4" ABOVE FINISHED FLOOR OF EXISTING DEWATERING FACILITY. 2" EIFS ON EXTERIOR FACE OF CMU NOT SHOWN, SEE ARCH.
12. EXISTING FLOOR DRAIN TO REMAIN.
13. NEW FLOOR COATING. SIKAGARD 62, SEE 3/S-10 FOR ADDITIONAL INFORMATION.
14. NEW GROUT, SIKATOP 122 PLUS, SEE 3/S-10 FOR ADDITIONAL INFORMATION. SLOPE TO NEW FLOOR DRAINS.
15. CHAIN DRIVEN 14'-0" x 8'-6" METAL ROLL-UP DOOR, SEE ARCH.
16. EXISTING METAL ROLL-UP DOOR TO REMAIN.
17. NEW BELT PRESS, SEE MECHANICAL.
18. EXISTING BELT PRESS TO REMAIN.
19. NEW CONCRETE PEDESTAL FOR NEW BELT PRESS.
20. NOT USED.
21. EXISTING PLATFORM.
22. EXISTING STAIR.
23. EXISTING CONVEYOR, CHUTE, AND FRAMING.
24. EXISTING CONCRETE CURB.
25. STEEL STAND FOR MECHANICAL EQUIPMENT.
26. NEW HOUSEKEEPING PAD FOR MECHANICAL EQUIPMENT, SEE DETAIL 5/S-10.
27. NEW PIPE SUPPORT.
28. SIKADUR 22 LO-MOD SEEDED TO REFUSAL WITH #3 FLINT OR ARMORSTONE INSTALL FLOOR COATING PER MFR RECOMMENDATIONS.
29. EXISTING WIND COLUMN OR NEW HSS 4x4x¼ COLUMN IN WALL. IF NEW HSS, ANCHOR TO CONCRETE AS SHOWN IN C/S-9.
30. MASONRY CONTROL JOINT (MCJ), SEE DETAIL 2/S-11.
31. C10x15.3 DOOR JAMB, VERIFY CHANNEL DEPTH WITH WALL THICKNESS. PROVIDE ⅜" BASE PL WITH (2) ⅜" DIAMETER DRILL AND EPOXY ANCHORS TO CONCRETE.
32. INSTALL NEW/REUSED PANEL AND FASTEN TO MATCH EXISTING. REPLACE BASE ANGLE TO MATCH EXISTING.
33. PROVIDE CMU LINTEL. SEE DETAIL 1/S-11.

TOP OF GROUT FLOOR ELEV. □

A. 0" AFF
B. ½" AFF
C. 2" AFF

FIRST FLOOR PLAN
Scale 3/16"=1'-0"

0 4' 8'

No.	DESCRIPTION	DATE	BY
1	BID SET	5/22/20	RKS
2			
3			
4			
5			
6			
7			

REVISIONS (OR CHANGE NOTICES)

Designed By: AECOM Imagine it. Delivered. 6501 America's Pkwy NE, Suite 900 Albuquerque, New Mexico 87110 (505)-855-7500

Designed For: CITY OF RIO RANCHO

WASTEWATER TREATMENT PLANT 2 SOLIDS HANDLING IMPROVEMENTS

DEWATERING FACILITY FIRST FLOOR PLAN ALTERNATE

ROBERT E. HAWTHORNE NEW MEXICO No. 8178 5-22-2020 REGISTERED PROFESSIONAL ENGINEER

PROJECT NO.	WW2030
DESIGNED BY:	RKS, REH
DRAWN BY:	CAM
CHECKED BY:	RKS, REH
DATE MODIFIED:	5-22-2020
DPW CHK:	

SHEET: S-4A

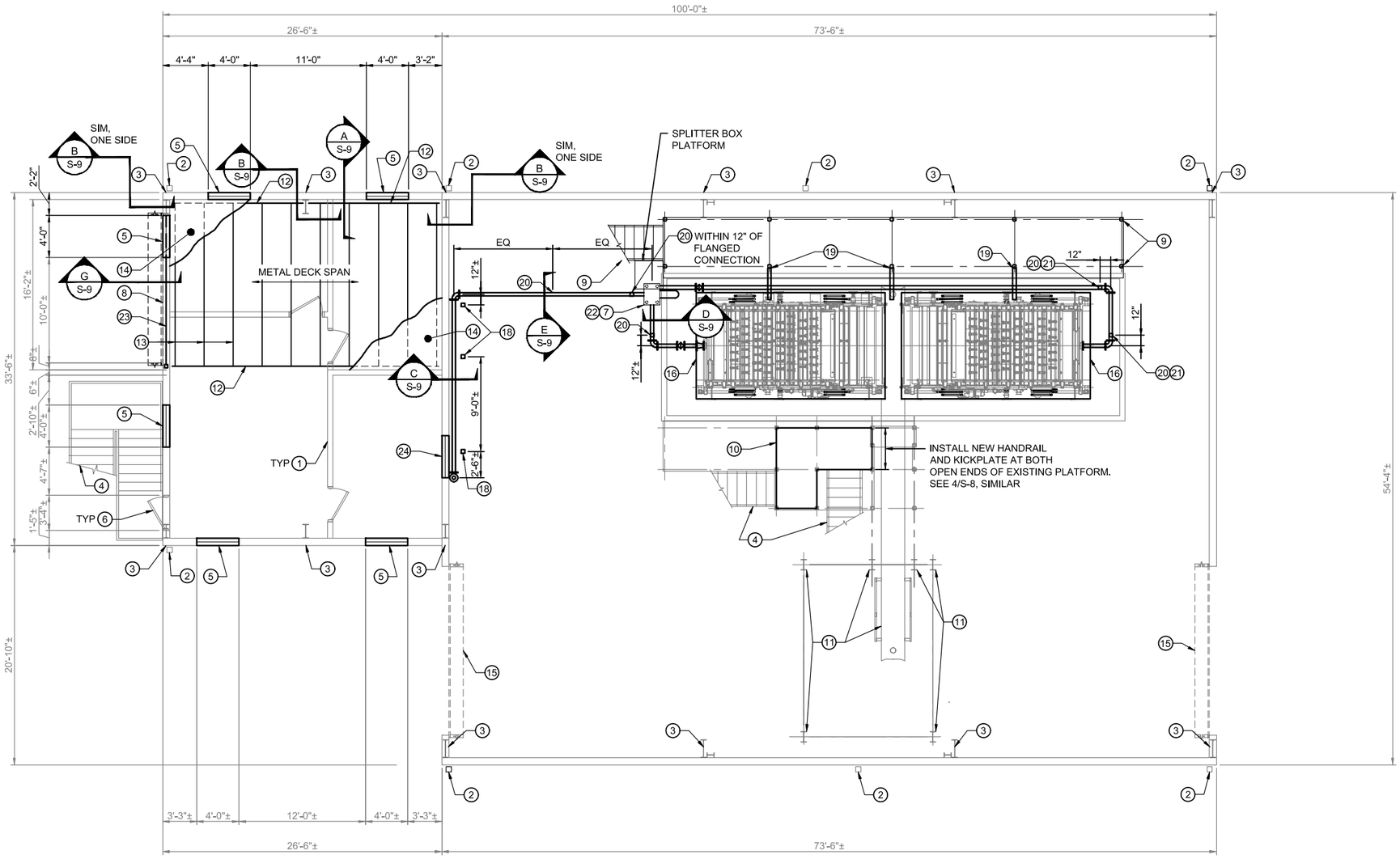

GENERAL NOTES:

1. DIMENSIONS SHOWN MAY VARY FROM ACTUAL CONDITIONS. CONTRACTOR SHALL FIELD VERIFY ALL DIMENSIONS AND ELEVATIONS.

KEYED NOTES

1. OFFICE WALLS AND DOORS, SEE ARCH.
2. DOWNSPOUT.
3. EXISTING METAL BUILDING FRAME TO REMAIN.
4. EXISTING STAIR.
5. NEW WINDOW.
6. DOOR, SEE ARCH.
7. STEEL STAND TO SUPPORT MECHANICAL EQUIPMENT.
8. NEW STUD WALL FRAMING AND INSULATION WITH NEW SALVAGED EXTERIOR METAL WALL PANEL.
9. METAL PLATFORM, STAIRS, AND SUPPORT SYSTEM, SEE S-7 AND S-8.
10. EXISTING PLATFORM.
11. EXISTING CONVEYOR, CHUTE, AND FRAMING.
12. W6x12 BEAM ON TOP OF 4" BEARING STUD WALL BELOW.
13. TEN W6x12 BEAMS SUPPORTING DECK, ONE EACH END, EQUAL SPACED, 3'-3" O.C. MAX..
14. GALVANIZED 0.6 C 22 GA METAL DECK WITH 1½" CONCRETE SLAB (TOTAL DEPTH OF SLAB AND DECK = 2") REINFORCED WITH 6x6-W2.9xW2.9 WELDED WIRE MESH. USE ⅜" MAX AGGREGATE SIZE IN DECK CONCRETE. WELD DECK TO SUPPORTS WITH ⅝" PUDDLE WELDS, 30/4 PATTERN. FASTEN SIDELAPS WITH #10 TEK SCREWS AT 12" O.C. DECK SHALL BE 2 SPAN MINIMUM.
15. EXISTING METAL ROLL-UP DOOR TO REMAIN.
16. NEW BELT PRESS, SEE MECHANICAL.
17. NOT USED.
18. ALIGN PIPE SUPPORT W/ WALL STUD, SEE C/S-5.
19. PIPE SUPPORT, SEE A/S-7.
20. PIPE SUPPORT, SEE E/S-9.
21. PIPE SUPPORT, SEE E AND F ON S-9.
22. PIPE SUPPORT, SEE D/S-9.
23. W6x12 BEAM, FASTEN EACH END TO PEMB FRAMING OR NEW HSS SIMILAR TO B/S-9.
24. NEW WALL IN-FILL. US 6" 20 GA STUD AT 16" O.C. MAX.

SECOND FLOOR PLAN
Scale 3/16"=1'-0"

0 4' 8'

Rio Rancho City of Vision

No.	DESCRIPTION	DATE	BY
1	BID SET	5/22/20	RKS
2			
3			
4			
5			
6			
7			

REVISIONS (OR CHANGE NOTICES)

Designed By: AECOM Imagine it. Delivered.
One Park Square
6501 Americas Pkwy NE, Suite 900
Albuquerque, New Mexico 87110
(505)-855-7500

Designed For: CITY OF RIO RANCHO

WASTEWATER TREATMENT PLANT 2 SOLIDS HANDLING IMPROVEMENTS

DEWATERING FACILITY SECOND FLOOR PLAN ALTERNATE

ROBERT E. HAWTHORNE NEW MEXICO No. 8178 5-22-2020 REGISTERED PROFESSIONAL ENGINEER

PROJECT NO.	WW2030
DESIGNED BY:	RKS, REH
DRAWN BY:	CAM
CHECKED BY:	RKS, REH
DATE MODIFIED:	5-22-2020
DPW CHK:	

SHEET: S-5A

DWG: L:\WW\WW2030 Rio Rancho - Solids Dewatering Design\WW-CAD-DSN\WW-CAD\WW-SHEETS\S-5A.dwg USER: Jesse.Hughes
DATE: May 22, 2020 9:34pm XREFS: Shelter1 WWTP1_AECOM_PW.ctb WWTP1_AECOM_PW.stb WIDTH: 24" Screened Mask_Shelter.jpg

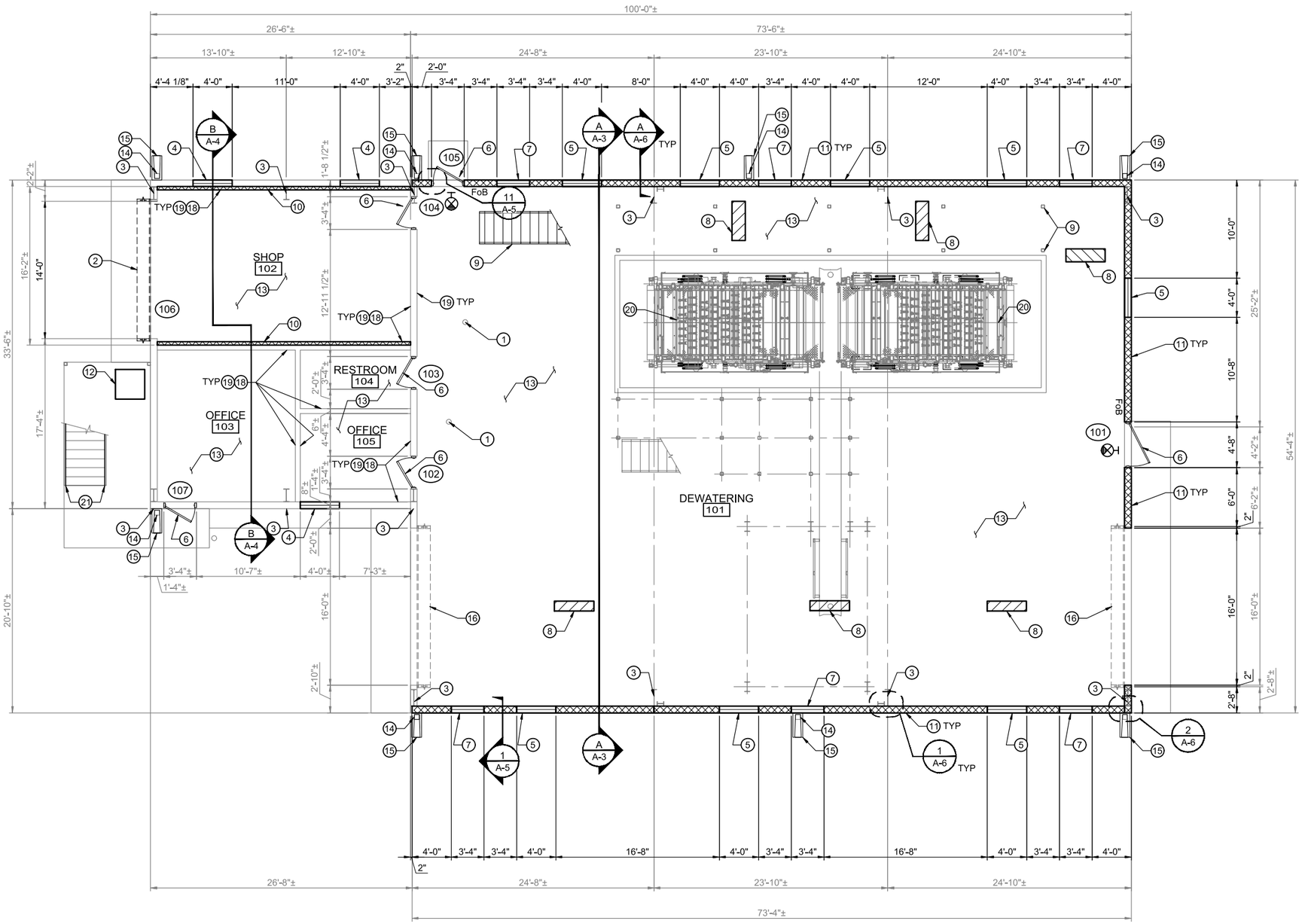

GENERAL NOTES:

1. DIMENSIONS ARE BASED ON OWNERS SUPPLIED RECORD DRAWINGS AND MAY VARY FROM ACTUAL CONDITIONS. CONTRACTOR SHALL FIELD VERIFY ALL DIMENSIONS AND ELEVATIONS.
2. REFERENCE ELEVATION: 5150.01 = EXISTING FINISHED FIRST FLOOR (0'-0").
3. SEE SHEETS A-5, A-6, AND A-7 FOR TYPICAL DETAILS.

KEYED NOTES ◯

1. FLOOR DRAIN.
2. CHAIN DRIVE, 14'-0" x 8'-6" SELF-SUPPORTING ROLL-UP DOOR, SEE SCHEDULE.
3. EXISTING METAL BUILDING FRAME.
4. NEW INSULATED DOUBLE PANE WINDOW, VERIFY SIZE WITH EXISTING WINDOW.
5. 4'-0"x4'-0" INSULATED DOUBLE PANE WINDOW.
6. HOLLOW METAL INSULATED DOOR, DOOR FRAME AND THRESHOLD, SEE SCHEDULE.
7. METAL LOUVER, SEE H-3.
8. TRENCH DRAIN SYSTEM.
9. METAL PLATFORM, STAIRS, AND SUPPORT SYSTEM, SEE STRUCTURAL.
10. 4" STUD WALL W/ ⅝" GYP BOARD EXPOSED FACE.
11. 8" CMU WALL TO 7'-4" ABOVE FINISHED FLOOR OF EXISTING DEWATERING FACILITY. 2" EIFS ON EXTERIOR FACE OF CMU NOT SHOWN.
12. HVAC SYSTEM, SEE HVAC.
13. FLOOR FINISH, SEE SCHEDULE.
14. NEW DOWNSPOUT TO MATCH EXISTING.
15. STANDARD CONCRETE SPLASH BLOCK.
16. EXISTING METAL ROLL-UP DOOR.
17. NOT USED.
18. REPAIR DRY WALL AND PAINT WALLS.
19. NEW BASEBOARDS.
20. NEW BELT PRESS, SEE MECHANICAL.
21. NEW HANDRAIL @ 2'-10" ON EXISTING STAIR.

LEGEND:

- (XXX) SEE SHEET A-7 FOR DOOR SCHEDULE
- [XXX] SEE SHEET A-7 FOR FINISH SCHEDULE
- FoB FoB - FIRE EXTINQUISHER ON BRACKET
- EXIT SIGN/EMERGENCY LIGHTING

FIRST FLOOR PLAN
Scale 3/16"=1'-0"

0 4' 8'

No.	DESCRIPTION	DATE	BY
1	BID SET	5/22/20	RKS
2			
3			
4			
5			
6			
7			

REVISIONS (OR CHANGE NOTICES)

Rio Rancho City of Vision

Designed By: AECOM Imagine it. Delivered. 6501 America's Pkwy NE, Suite 900 Albuquerque, New Mexico 87110 (505)-855-7500

Designed For: CITY OF RIO RANCHO

WASTEWATER TREATMENT PLANT 2 SOLIDS HANDLING IMPROVEMENTS

DEWATERING FACILITY FIRST FLOOR PLAN ALTERNATE

ROBERT E. HAWTHORNE NEW MEXICO 8178 REGISTERED PROFESSIONAL ENGINEER 5-22-2020

PROJECT NO.	WW2030
DESIGNED BY:	RKS, REH
DRAWN BY:	CAM
CHECKED BY:	RKS, REH
DATE MODIFIED:	5-22-2020
DPW CHK:	

SHEET: A-1A

DWG: L:\Projects\Rio Rancho - Solids Dewatering Design\WW2030-CAD-PW\WW2030-CAD-SHEETS\A-1.dwg USER: Jason.Higgins
DATE: May 22, 2020 - 3:06pm XREFS: RIO_ARCH_FIRST_FLOOR_ALTERNATE_BASE.dwg IMAGES: Insight_2_Colored_Mask_300dpi.jpg

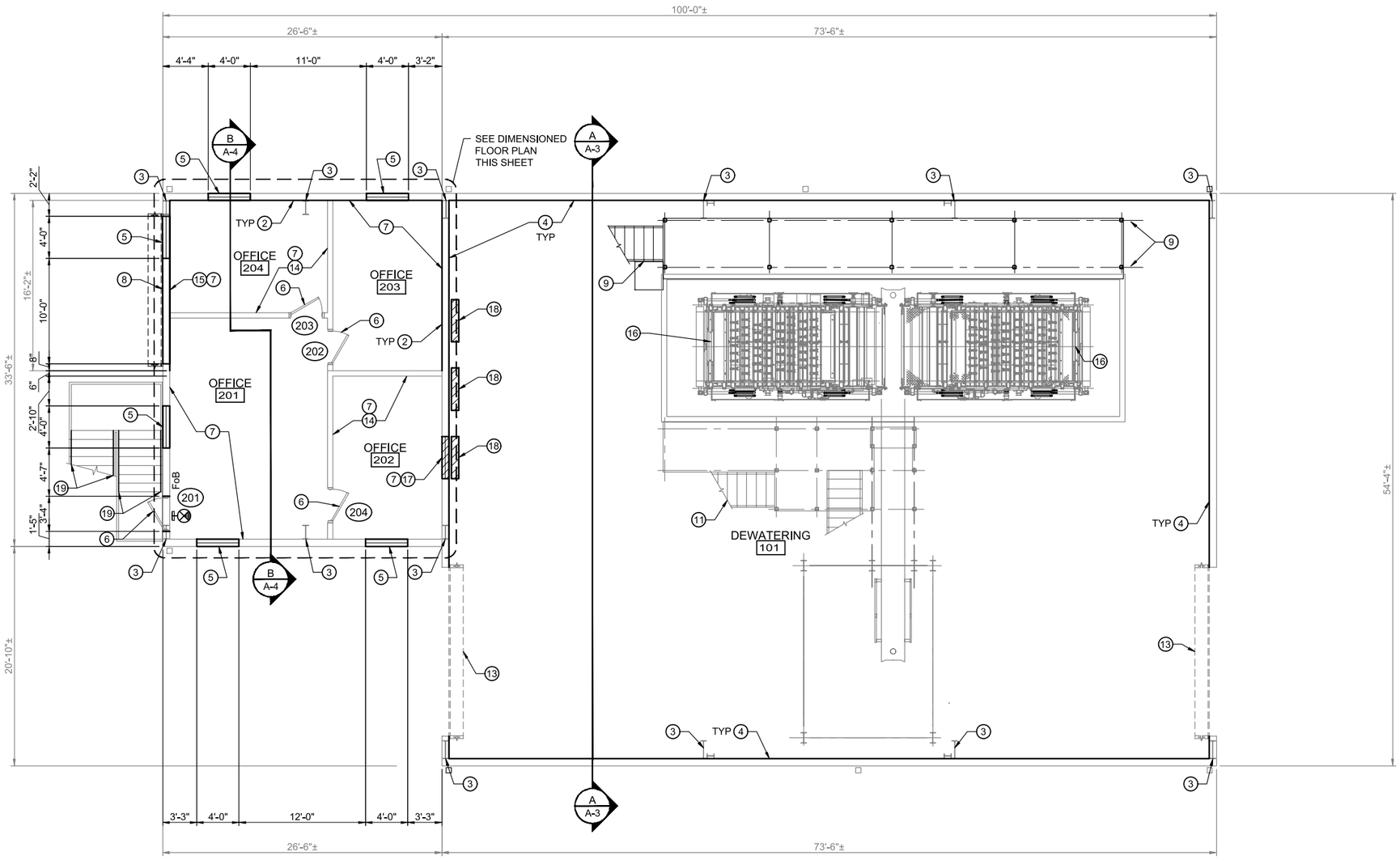

SECOND FLOOR PLAN
Scale 3/16"=1'-0"

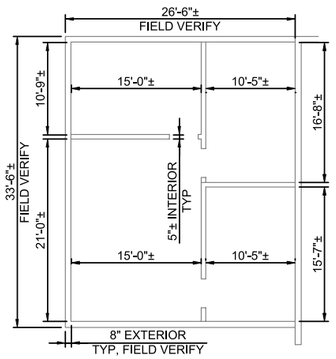

DIMENSIONED SECOND FLOOR PLAN
Scale 1/8"=1'-0"

GENERAL NOTES:

1. DIMENSIONS ARE BASED ON OWNERS SUPPLIED RECORD DRAWINGS AND MAY VARY FROM ACTUAL CONDITIONS. CONTRACTOR SHALL FIELD VERIFY ALL DIMENSIONS AND ELEVATIONS.
2. REFERENCE ELEVATION: 5150.01 = EXISTING FINISHED FLOOR (0'-0").
3. SEE SHEETS A-5, A-6, AND A-7 FOR TYPICAL DETAILS.

KEYED NOTES ◯

1. NOT USED.
2. BASEBOARD.
3. EXISTING METAL BUILDING FRAME.
4. EXISTING LINER PANEL TO REMAIN.
5. 4'-0"x4'-0" INSULATED DOUBLE PANE WINDOW.
6. HOLLOW METAL INSULATED DOOR, DOOR FRAME AND THRESHOLD, SEE SCHEDULE.
7. INTERIOR GYPSUM WALL BOARD.
8. EXTERIOR METAL WALL PANELS.
9. METAL PLATFORM, STAIRS, AND SUPPORT SYSTEM, SEE STRUCTURAL.
10. NOT USED.
11. EXISTING PLATFORM TO REMAIN.
12. 2'x2' PANEL ACOUSTIC SUSPENDED CEILING.
13. EXISTING METAL ROLL-UP DOOR.
14. 3 5/8" METAL STUD PARTITION, SEE SCHEDULE.
15. 6" METAL STUD FRAMING W/ INSULATION.
16. NEW BELT PRESS, SEE MECHANICAL
17. NEW STUD WALL TO FILL EXISTING WINDOW SPACE.
18. NEW GYPSUM WALL BOARD WITH LINER PANEL TO MATCH EXISTING IN AREA OF PREVIOUS WINDOW AND AROUND NEW PIPE SUPPORTS.
19. NEW HANDRAIL @ 2'-10" ON EXISTING STAIR.

LEGEND:

- (XXX) SEE SHEET A-7 FOR DOOR SCHEDULE
- XXX SEE SHEET A-7 FOR FINISH SCHEDULE
- FoB FoB - FIRE EXTINQUISHER ON BRACKET
- EXIST SIGN/EMERGENCY LIGHTING

No.	DESCRIPTION	DATE	BY
1	BID SET	5/22/20	RKS
2			
3			
4			
5			
6			
7			

REVISIONS (OR CHANGE NOTICES)

Designed By: AECOM Imagine it. Delivered. 6501 America Pkwy NE, Suite 900 Albuquerque, New Mexico 87110 (505)-855-7500

Designed For: CITY OF RIO RANCHO

WASTEWATER TREATMENT PLANT 2 SOLIDS HANDLING IMPROVEMENTS

DEWATERING FACILITY SECOND FLOOR PLAN ALTERNATE

ROBERT E. HAWTHORNE NEW MEXICO No. 8178 REGISTERED PROFESSIONAL ENGINEER 5-22-2020

PROJECT NO.	WW2030
DESIGNED BY:	RKS, REH
DRAWN BY:	CAM
CHECKED BY:	RKS, REH
DATE MODIFIED:	5-22-2020
DPW CHK:	

SHEET: A-2A

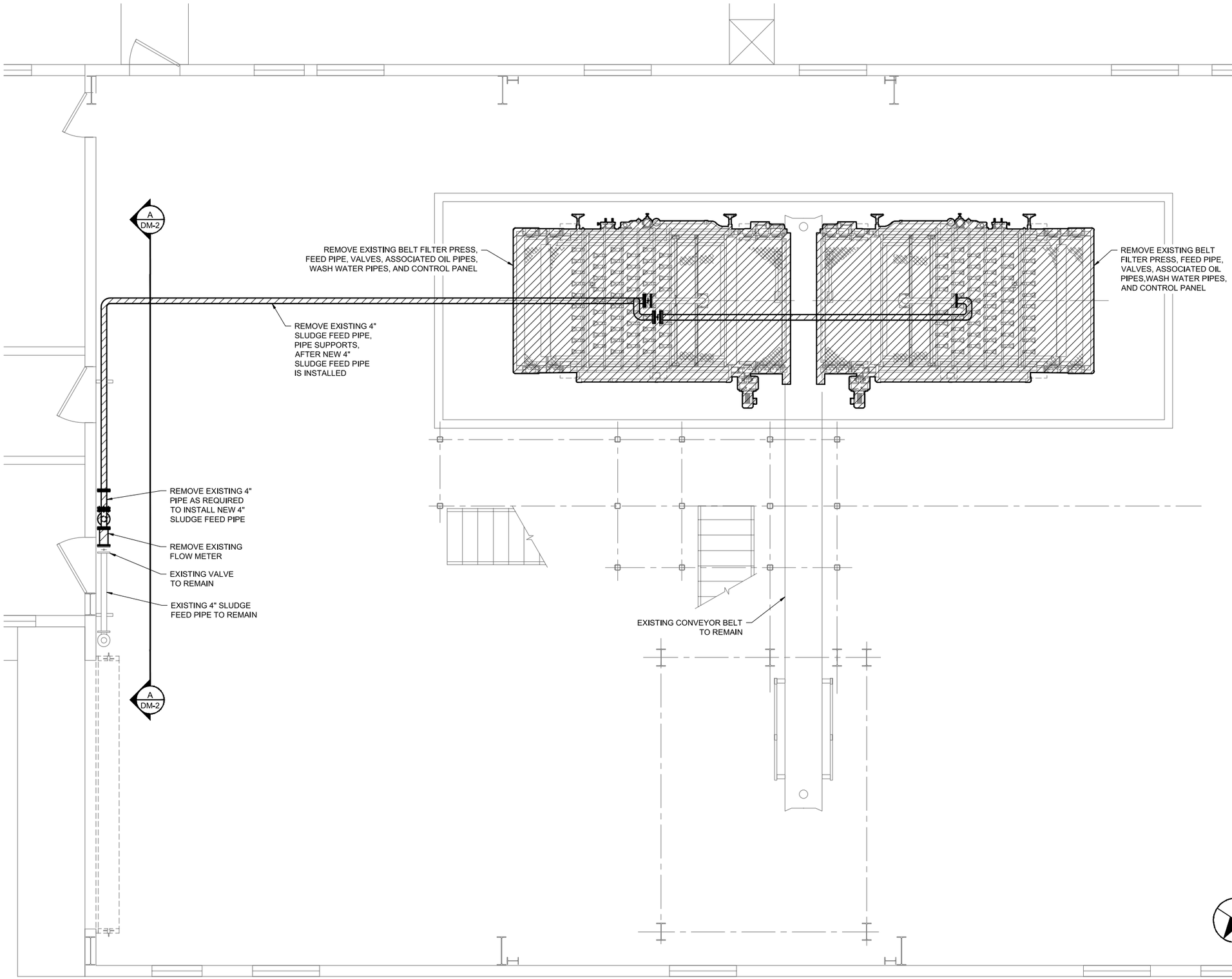

PARTIAL DEWATERING FLOOR PLAN

Scale 3/8"=1'-0"

No.	DESCRIPTION	DATE	BY
1	BID SET	5/22/20	RKS
2			
3			
4			
5			
6			
7			

REVISIONS (OR CHANGE NOTICES)

Rio Rancho City of Vision

Designed By: AECOM Imagine it. Delivered.
One Park Square
6501 Americas Pkwy NE, Suite 900
Albuquerque, New Mexico 87110
(505)-855-7500

Designed For: CITY OF RIO RANCHO

WASTEWATER TREATMENT
PLANT 2 SOLIDS HANDLING
IMPROVEMENTS

DEWATERING SYSTEM
DEMOLITION PLAN
ALTERNATE

RIPAN K. SAHA
NEW MEXICO
24280
PROFESSIONAL ENGINEER
5-22-2020

PROJECT NO.	WW2030
DESIGNED BY:	RKS, REH
DRAWN BY:	CAM
CHECKED BY:	RKS, REH
DATE MODIFIED:	5-22-2020
DPW CHK:	

SHEET:
DM-1A

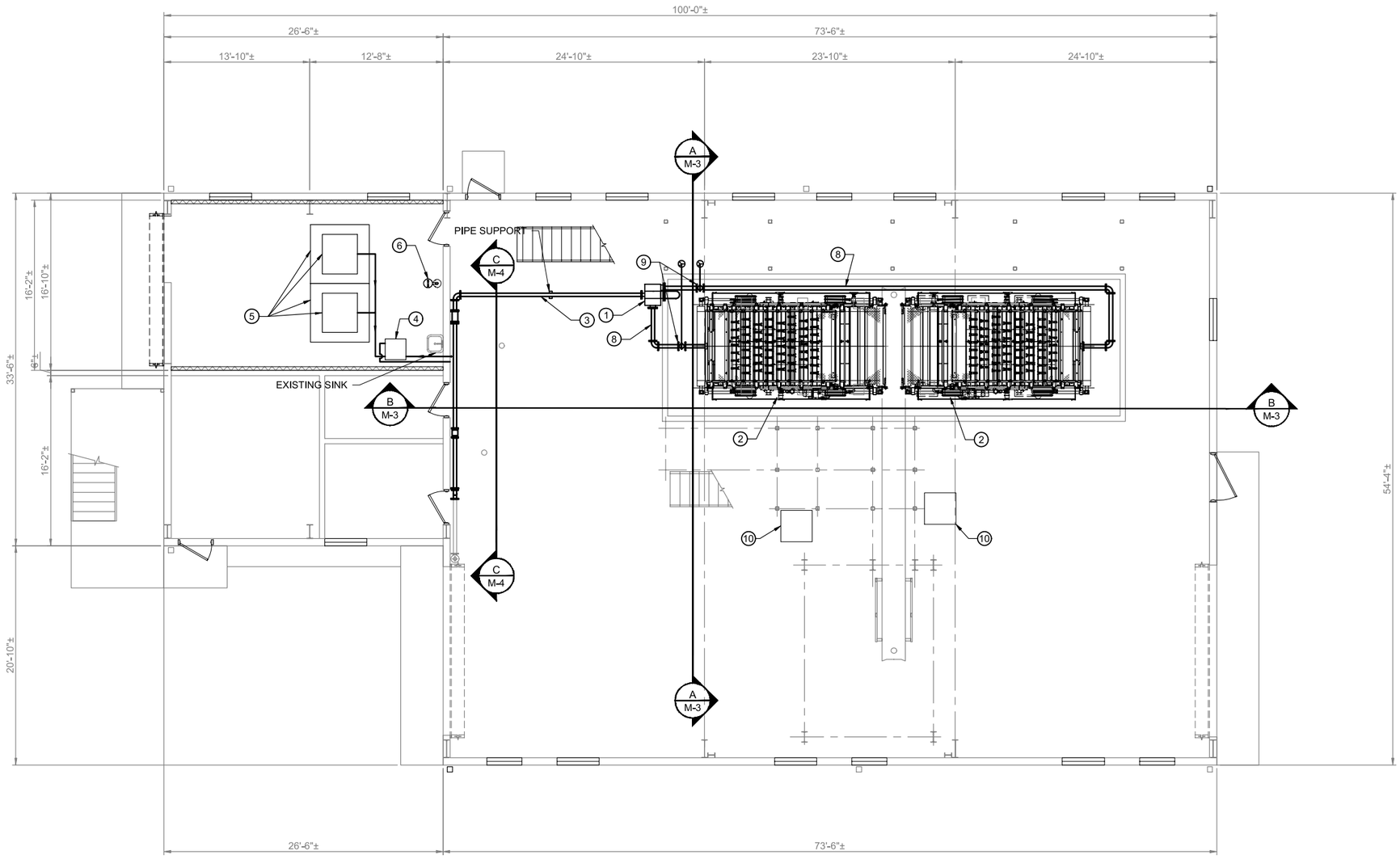

FIRST FLOOR PLAN
Scale 3/16"=1'-0"

0 4' 8'

GENERAL NOTES:

1. DIMENSIONS SHOWN MAY VARY FROM ACTUAL CONDITIONS. CONTRACTOR SHALL FIELD VERIFY ALL DIMENSIONS AND ELEVATIONS.

KEYED NOTES ◯

1. NEW FLOW SPLITTER, SEE DETAILS ON SHEET M-6.
2. NEW BELT FILTER PRESS, SEE SECTIONS ON SHEET M-3.
3. NEW 4" DIP SLUDGE FEED PIPE.
4. NEW POLYMER MIXING SYSTEM, SEE SHEET M-5.
5. NEW (2) IBC TOTES AND SPILL PALLETS, SEE SHEET M-5.
6. NEW EYE WASH STATION, SEE SHEET M-6.
7. NOT USED.
8. NEW 6" DIP SLUDGE FEED.
9. NEW 6" PLUG VALVES WITH EXTENDED OPERATOR STEM TO THE PLATFORM. (TYP. 2)
10. AIR COMPRESSOR UNIT FOR NEW BELT PRESS. AIR TUBING TO BE ATTACHED TO CONVEYOR BELT OR STAIR COLUMNS

Rio Rancho City of Vision

No.	DESCRIPTION	DATE	BY
1	BID SET	5/22/20	RKS
2			
3			
4			
5			
6			
7			

REVISIONS (OR CHANGE NOTICES)

Designed By: AECOM Imagine it. Delivered.
One Park Square
6501 Americas Pkwy NE, Suite 900
Albuquerque, New Mexico 87110
(505)-855-7500

Designed For:
CITY OF RIO RANCHO

WASTEWATER TREATMENT
PLANT 2 SOLIDS HANDLING
IMPROVEMENTS

DEWATERING SYSTEM PLAN
ALTERNATE

RIPAN K. SAHA
NEW MEXICO
24280
PROFESSIONAL ENGINEER
5-22-2020

PROJECT NO.	WW2030
DESIGNED BY:	RKS, REH
DRAWN BY:	CAM
CHECKED BY:	RKS, REH
DATE MODIFIED:	5-22-2020
DPW CHK:	

SHEET:
M-2A

DWG: L:\WW\WW2030 Rio Rancho - Solids Dewatering Design\WW-CAD-GIS\WW-CAD\Xb-SHEETS\M-2A.dwg USER: Jonas Higgins
DATE: May 22, 2020 5:29pm XREFS: Shelter1 WWTP1_AECOM_Pre-BIM IMAGES: Image1_Delivered Mask_Shape.jpg

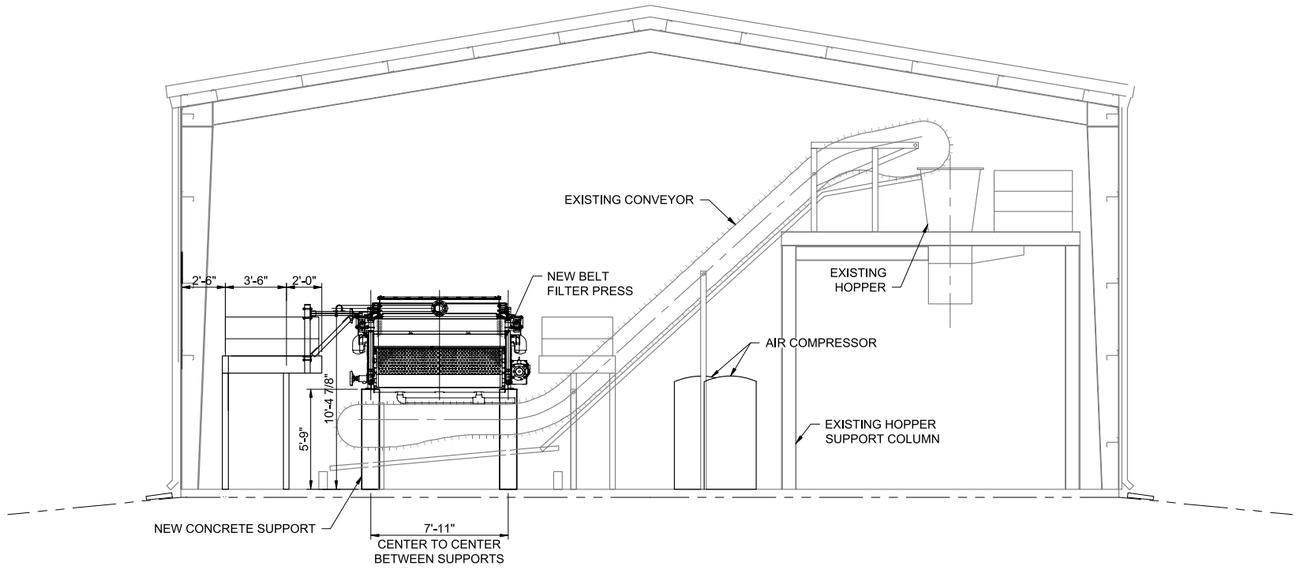

SECTION A-A

Scale 1/4"=1'-0"

GENERAL NOTES:

1. DIMENSIONS ARE BASED ON OWNERS SUPPLIED RECORD DRAWINGS AND MAY VARY FROM ACTUAL CONDITIONS. CONTRACTOR SHALL FIELD VERIFY ALL DIMENSIONS AND ELEVATIONS.
2. ALL PIPE SUPPORTS ARE NOT SHOWN. CONTRACTOR TO PROVIDE PIPE SUPPORTS FOR 6" DIP AS REQUIRED AND SUPPORTED FROM THE BELT PRESS FRAME.
3. ALL BELT PRESS DRAINS SHALL BE EXTENDED WITH SUPPORT, AS REQUIRED, TO 6" ABOVE THE FLOOR.
4.
5. CONTRACTOR MUST COORDINATE WITH THE OPERATORS AND ENGINEER TO DETERMINE EXACT LOCATIONS OF THE BELT PRESS ISOLATION PLUG VALVES FOLLOWING THE SPLITTER BOX. PIPE ROUTES COULD BE FIELD MODIFIED TO AVOID CONFLICT BETWEEN VALVES STEMS.

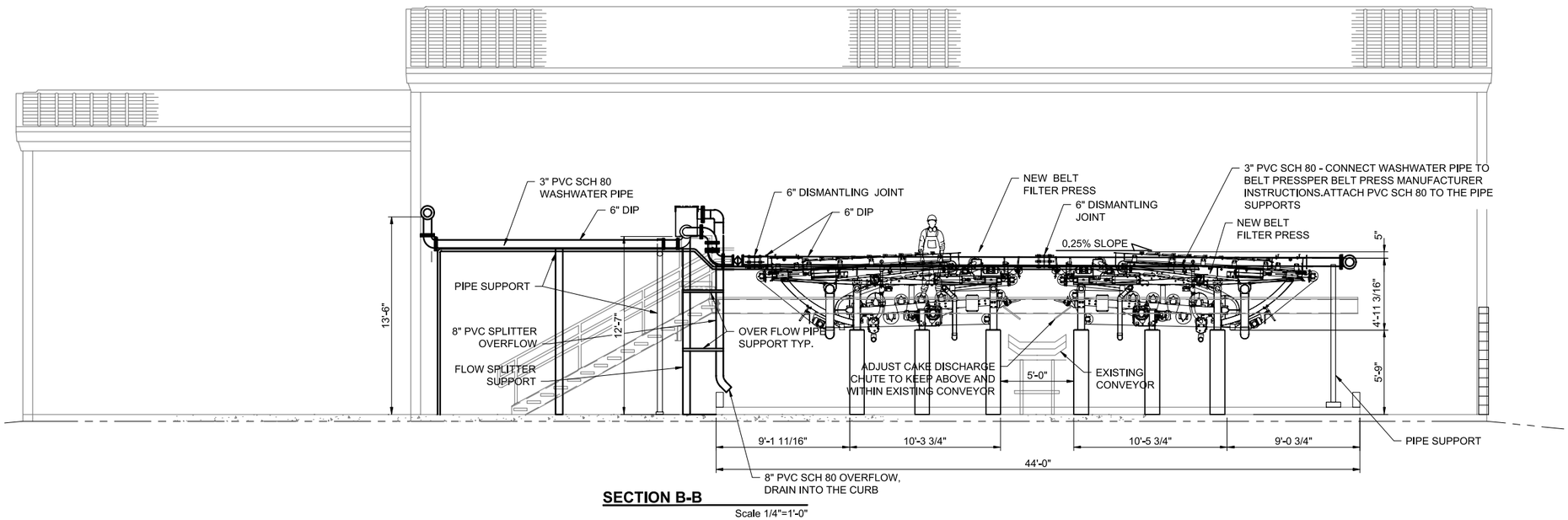

SECTION B-B

Scale 1/4"=1'-0"

No.	DESCRIPTION	DATE	BY
1	BID SET	5/22/20	RKS
2			
3			
4			
5			
6			
7			

REVISIONS (OR CHANGE NOTICES)

Designed By: AECOM Imagine it. Delivered. One Park Square, 6501 Americas Pkwy NE, Suite 900, Albuquerque, New Mexico 87110, (505)-855-7500

Designed For: CITY OF RIO RANCHO

WASTEWATER TREATMENT
PLANT 2 SOLIDS HANDLING
IMPROVEMENTS

DEWATERING SYSTEM
SECTIONS ALTERNATE

RIPAN K. SAHA, NEW MEXICO, 24280, PROFESSIONAL ENGINEER, 5-22-2020

PROJECT NO.	WW2030
DESIGNED BY:	RKS, REH
DRAWN BY:	CAM
CHECKED BY:	RKS, REH
DATE MODIFIED:	5-22-2020
DPW CHK:	

SHEET: M-3A

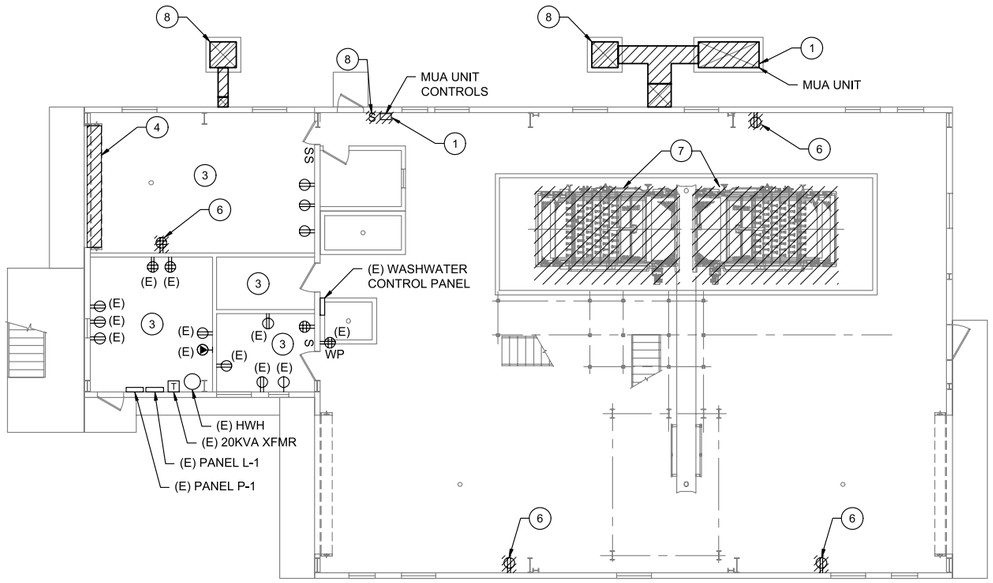

FIRST FLOOR ELECTRICAL DEMO PLAN
Scale 1/8"=1'-0"

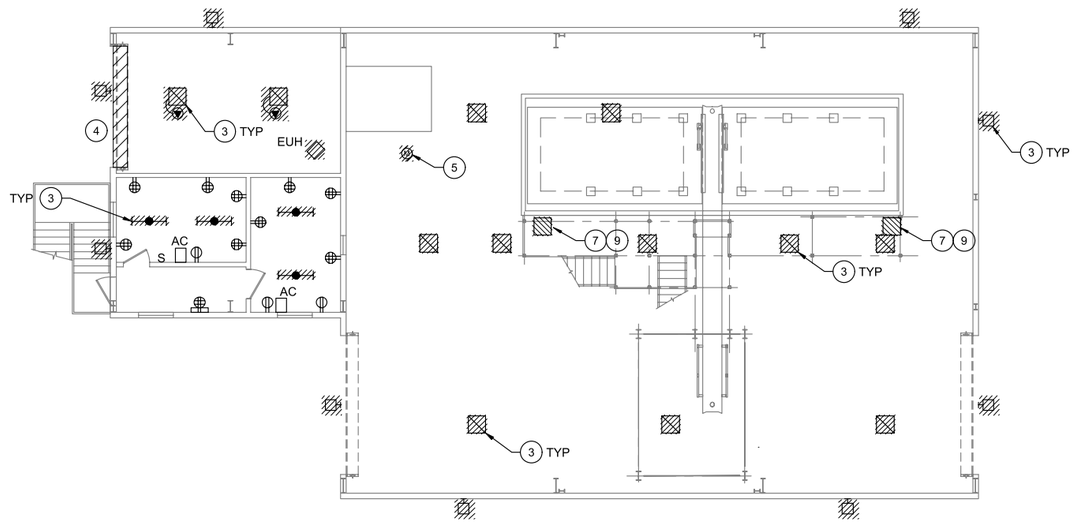

SECOND FLOOR ELECTRICAL DEMO PLAN
Scale 1/8"=1'-0"

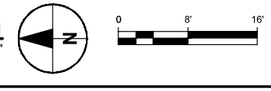

GENERAL NOTES:

1. DIMENSIONS SHOWN MAY VARY FROM ACTUAL CONDITIONS. CONTRACTOR SHALL FIELD VERIFY ALL DIMENSIONS AND ELEVATIONS.
2. OWNER RETAINS THE RIGHT OF FIRST REFUSAL ON AL DEMOLISHED EQUIPMENT.

KEYED NOTES ◯

1. REMOVE CABLE AND CONDUIT FROM DEMOLISHED MAKEUP AIR UNIT (MUA) AND MUA CONTROLS BACK TO SOURCE.
2. NOT USED.
3. REMOVE LIGHT FIXTURES, POWER CABLING, AND CONDUIT BACK TO SOURCE.
4. REMOVE POWER & ASSOCIATED ACCESSORIES FOR ROLL-UP DOOR BACK TO SOURCE.
5. REMOVE POWER TO EXISTING POLYMER PUMP BACK TO SOURCE.
6. REMOVE DEVICE, WIRING, & CONDUIT BACK TO SOURCE.
7. REMOVE BELT PRESS POWER CONNECTION & BELT PRESS CONTROL PANEL BACK TO SOURCE PANEL P-1. REMOVE EXISTING 60A/3P CIRCUIT BREAKER & RELAY SHUNT ASSOCIATED WITH BELT PRESS.
8. REMOVE CABLE AND CONDUIT FOR EVAPORATIVE COOLER AND CONTROLS BACK TO SOURCE.
9. COORDINATE RELOCATION OF EXISTING SLUDGE PUMP POWER TO NEW BELT PRESS CONTROL PANEL..

Rio Rancho City of Vision

No.	DESCRIPTION	DATE	BY
1	BID SET	5/22/20	RKS
2			
3			
4			
5			
6			
7			

REVISIONS (OR CHANGE NOTICES)

Designed By: AECOM Imagine it. Delivered.
One Park Square
6501 Americas Pkwy NE, Suite 900
Albuquerque, New Mexico 87110
(505)-855-7500

Designed For:
CITY OF RIO RANCHO

WASTEWATER TREATMENT PLANT 2 SOLIDS HANDLING IMPROVEMENTS

DEMOLITION PLAN – ALTERNATE

EUGENE DAVID MOE NEW MEXICO 21369 PROFESSIONAL ENGINEER 5-22-2020

PROJECT NO.	WW2030
DESIGNED BY:	RKS, REH
DRAWN BY:	CAM
CHECKED BY:	RKS, REH
DATE MODIFIED:	5-22-2020
DPW CHK:	

SHEET: DE-1A

DWG: L:\WW\WW2030 Rio Rancho - Solids Dewatering Design\WW-CAD-DSN\WW-CAD\2D-SHEETS\DE-1A.dwg USER: Jessica.Higgins
DATE: May 22, 2020 3:07pm XREFS: WW2030_Plant_Layout_Demo.dwg PLOTTED BY: AECOM Plot 36x24 PLOTTED: May 22, 2020 3:07pm
XREFS: WW2030_Plant_Layout_Demo.dwg WWTP_Layout_Demo.dwg WWTP_Layout_Demo_Xref.dwg WWTP_Layout_Demo_Xref_Shaded.dwg

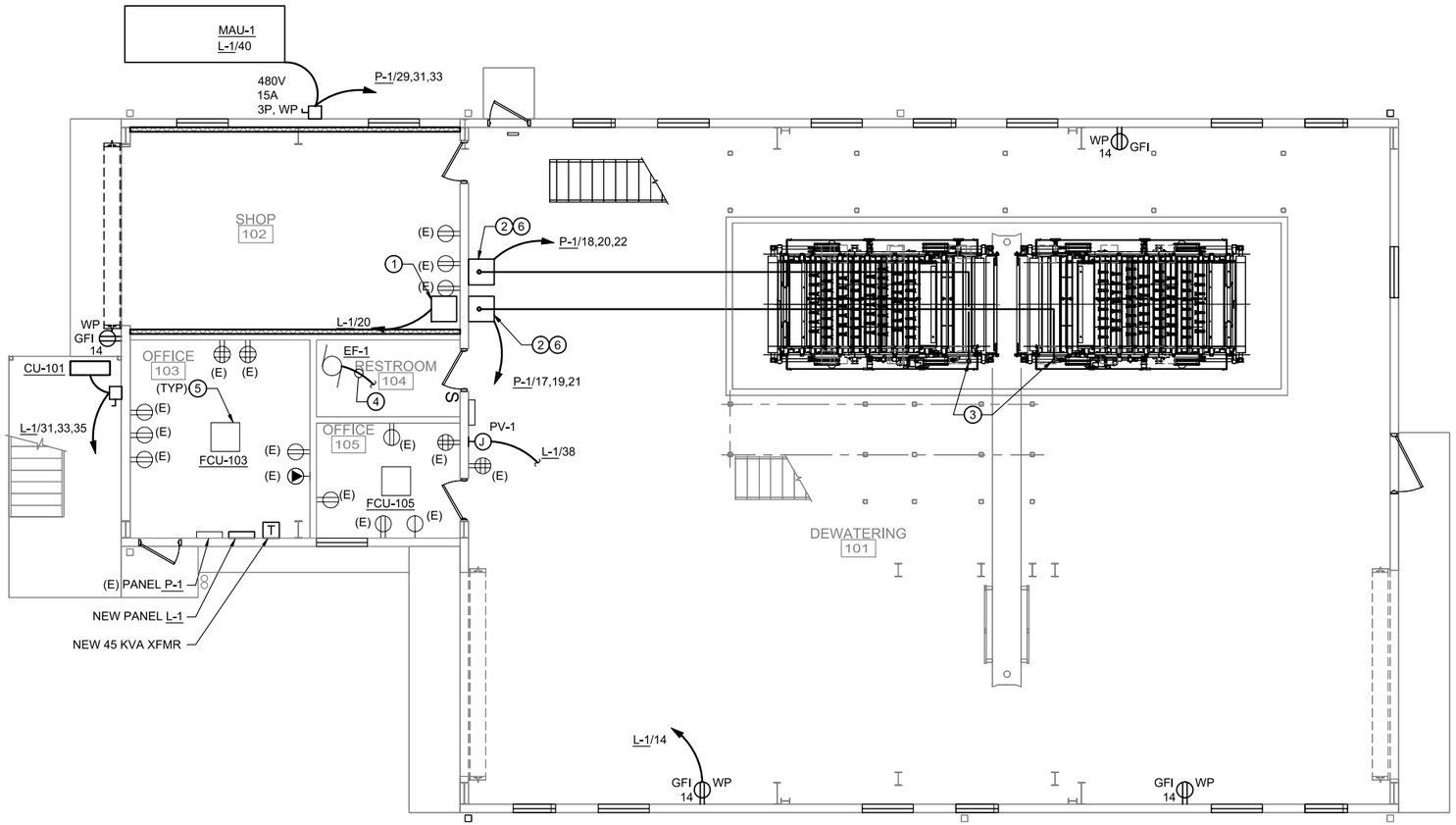

FIRST FLOOR POWER PLAN
Scale 3/16"=1'-0"

0 4' 8'

GENERAL NOTES:

1. DIMENSIONS ARE BASED ON OWNERS SUPPLIED RECORD DRAWINGS AND MAY VARY FROM ACTUAL CONDITIONS. CONTRACTOR SHALL FIELD VERIFY ALL DIMENSIONS AND ELEVATIONS.

KEYED NOTES

1. POLYMER PUMP FEED CONTROL PANEL (BY CONTRACTOR).
2. NEW BELT FILTER PRESS CONTROL PANEL (BY CONTRACTOR). ADJUST LOCATION BASED ON PIPE SUPPORTS AT THE VICINITY
3. (3) 3/4" C. & (1) 1" C BETWEEN CONTROLLER AND FINAL CONNECTIONS.
4. POWER NEW LIGHTS AND FAN FROM EXISTING CIRCUIT L-1/12. FAN & LIGHTS TO BE CONTROLLED BY WALL SWITCH.
5. MECHANICAL FAN COIL UNITS (FCU) AND BRANCH CIRCUIT SELECTORS (BCS) SHALL BE POWERED BY L-1/27,29. FCU & BCS SUPPLIED AND INSTALLED BY M.C., POWERED BY E.C.
6. POWER EXISTING SLUDGE PUMPS FROM NEW BELT PRESS CONTROL PANEL. MATCH EXISTING CONDUIT AND CABLE.

Rio Rancho City of Vision

No.	DESCRIPTION	DATE	BY
1	BID SET	5/22/20	RKS
2			
3			
4			
5			
6			
7			

REVISIONS (OR CHANGE NOTICES)

Designed By: AECOM Imagine it. Delivered.
One Park Square
6501 Americas Pkwy NE, Suite 900
Albuquerque, New Mexico 87110
(505)-855-7500

Designed For: CITY OF RIO RANCHO

WASTEWATER TREATMENT PLANT 2 SOLIDS HANDLING IMPROVEMENTS

FIRST FLOOR POWER PLAN – ALTERNATE

EUGENE DAVID MOE NEW MEXICO 21369 5-22-2020 PROFESSIONAL ENGINEER

PROJECT NO.	WW2030
DESIGNED BY:	RKS, REH
DRAWN BY:	CAM
CHECKED BY:	RKS, REH
DATE MODIFIED:	5-22-2020
DPW CHK:	

SHEET: E-3A

PANEL: L-1 | PHASE: 3 | WIRE: 4 WITH GROUND | LOCATION: OFFICE 103
TYPE: NEMA 1 | MOUNTING: SURFACE
VOLTAGE: 208 / 120 V | MAIN CIRCUIT BREAKER: 150A MCB
SPD: NO | BREAKER TYPE: BOLT ON
BUSSING AMPS: 100 | FED FROM: 45 KVA XFMR VIA P1 | PANEL DEVICE MIN. RATING: 10,000 A RMS SYMMETRICAL

DESCRIPTION	LOAD VA A	LOAD VA B	LOAD VA C	BKR TR	CCT NO	CCT Ø	CCT NO	BKR TR	LOAD VA A	LOAD VA B	LOAD VA C	DESCRIPTION
(EXISTING CKT) RECEPTACLES - SOUTH WALL	720			20	1	A	2	20	960			--
(EXISTING CKT) RECEPTACLES - SOUTH WALL		720		20	3	B	4			960		(EXISTING CKT) EXHAUST FAN
(EXISTING CKT) RECEPTACLES - WORKBENCH			720	20	5	C	6				960	--
(EXISTING CKT) RECEPTACLES - WORKBENCH	720			20	7	A	8	20	360			(EXISTING CKT) 2ND FLOOR A/C
SPARE				20	9	B	10	20		360		(EXISTING CKT) CHART RECORDER
SPARE				20	11	C	12	20			540	(EXISTING CKT) BTHRM LTS/REC CHART ROOM
(EXISTING CKT) RECEPTACLES - WORKBENCH	720			20	13	A	14	20	900			DEWATERING RECS
(EXISTING CKT) ROLL UP DOOR "NORTH"		750		20	15	B	16	20				SPARE
--			750		17	C	18	20			1000	(EXISTING CKT) DRYER
(EXISTING CKT) HWH - HOT WATER HEATER	1500			30	19	A	20	20	1000			POLYMER SYSTEM (1)
--		1500			21	B	22	30		2400		--
(EXISTING CKT) ROLL UP DOOR "SOUTH"			750	20	23	C	24				2400	(EXISTING CKT) COMPRESSOR
--	750				25	A	26		2400			--
FAN COIL UNITS (102,103,105, 201,202,203,204,205)		200		20	27	B	28	20		720		(EXISTING CKT) BELT PRESS CONTROL PANEL
AND BRANCH CIRCUIT SELECTORS			200		29	C	30	20			720	(EXISTING CKT) RECEPTACLES - MAINT SHOP
CONDENSING UNIT (CU-101)	4080			50	31	A	32	20	1212			(2) GAS UNIT HEATERS
3#6, #10 GND, 1"C		4080			33	B	34	20		900		OFFICE - 202
--			4080		35	C	36	20			1212	(2) GAS UNIT HEATERS
OFFICE - 204	900			20	37	A	38	15	450			PIT VALVE (PV-1)
OFFICE - 203		900		20	39	B	40	20			180	BELT PRESS REMOTE PANEL
OFFICE - 201			1080	20	41	C	42	20				SPARE
	9390	8150	7580						7282	5340	7012	

TOTAL CONNECTED VA
PHASE A= 16672
PHASE B= 13490
PHASE B= 14592
SUBTOTAL = 44754 SECTION 1
SECTION 2
TOTAL = 44754 LESS MOTOR STARTING

TOTAL CONNECTED AMPS 124.2 A | MANUFACTURER AND TYPE
TOTAL DEMAND AMPS = 124.2 A | 124.2 A X 125% FUTURE 155.3 A
TOTAL DEMAND VA = 44754 VA X 125% FUTURE = 55942.5 VA
MOTOR STARTING AMPS 0

NOTE: THIS IS A NEW PANEL. EXISTING TO REMAIN CIRCUITS FROM THE DEMOLISHED PANEL L-1 SHALL BE RELOCATED TO NEW PANEL L-1.

PANEL: (E) P-1 | PHASE: 3 | WIRE: 3 WITH GROUND | LOCATION: OFFICE 103
TYPE: NEMA 1 | MOUNTING: SURFACE
VOLTAGE: 480 / 277 V | MAIN CIRCUIT BREAKER: 200A MCB
SPD: NO | BREAKER TYPE: BOLT ON
BUSSING AMPS: 200 | FED FROM: SITE POWER SUPPLY | PANEL DEVICE MIN. RATING: 18,000 A RMS SYMMETRICAL

DESCRIPTION	LOAD VA A	LOAD VA B	LOAD VA C	BKR TR	CCT NO	CCT Ø	CCT NO	BKR TR	LOAD VA A	LOAD VA B	LOAD VA C	DESCRIPTION
SPARE	0			20	1	A	2	20	2300			--
--		0			3	B	4			2300		HOPPER VALVE
SPARE			0	20	5	C	6				2300	--
--	0				7	A	8	40	8000			--
--		15772			9	B	10			8000		WASHWATER PANEL
(1)(2) NEW PANEL L-1 VIA NEW 45KVA TRANSFORMER			14666	70	11	C	12				8000	--
--	14412				13	A	14	20	2156			LIGHTING - BELT PRESS ROOM (1)
SPACE		0		-	15	B	16	20		1000		LIGHTING - OFFICES (1)
--			7535		17	C	18				7535	--
(1)(2) NEW BELT PRESS	8535			60	19	A	20	60	8535			BELT PRESS #2 - WEST
--		8535			21	B	22			8535		--
SPACE			0	-	23	C	24	R				SHUNT TRIP FOR 18,20,22 - BELT PRESS #2
SPACE	0			-	25	A	26	20	0			SPARE
SPACE		0		-	27	B	28			0		--
--			1080		29	C	30				2105	--
(1)(2) MAU-1	1080			75	31	A	32	15	2105			EXHAUST FAN (EF-2) - 5HP (1)(2)
--		1080			33	B	34			2105		3#12 + #12G IN 3/4"C.
SPACE			0	-	35	C	36	20			0	EXTERIOR AND EMERGENCY LIGHTING (1)
	24027	25387	23281						23096	21940	19940	

TOTAL CONNECTED VA
PHASE A= 47123
PHASE B= 47327
PHASE B= 43221
SUBTOTAL = 137671 SECTION 1
SECTION 2
TOTAL = 137671 LESS MOTOR STARTING

TOTAL CONNECTED AMPS 165.6 A | MANUFACTURER AND TYPE
TOTAL DEMAND AMPS = 165.6 A | 165.6 A X 125% FUTURE 207.0 A
TOTAL DEMAND VA = 137671 VA X 125% FUTURE = 172088.75 VA
MOTOR STARTING AMPS 0

NOTE: THIS IS AN EXISTING PANEL. BOLD AND NOTED CIRCUITS ARE NEW WORK WITHIN PANEL.

KEYED NOTES

1. PROVIDE NEW CIRCUIT BREAKER AS INDICATED.
2. REMOVE EXISTING CIRCUIT BREAKER.
3. SEE DWG. E-1 FOR ADDITIONAL WIRING REQUIREMENTS.
4. 3#4 & 1#10 GND IN 1" C.
5. 3#12 & 1#12 GND IN 3/4" C.
6. 4#2 & 1#8 GND IN 1-1/2" C.
7. REPLACE EXISTING 30-POLE PANEL L-1 WITH NEW 42-POLE PANEL L-1. THIS WORK SHALL BE PERFORMED OFF HOURS AND OVER A WEEKEND. THIS WORK MAY NOT AFFECT THE OPERATIONS OF THE DEWATERING FACILITY.

LIGHT FIXTURE SCHEDULE

TAG	DESCRIPTION	MAKE	MODEL	LAMP	WATTS (W)	VOLTAGE (V)	LUMENS	COLOR (K)	COMMENTS
A1	2 X 4 LOW-PROFILE, FLAT PANEL SURFACE MOUNTED LED	COOPER LIGHTING	24FPSL2SCT3-4000K-MID	LED	41.5	277	4795	4000	
A2	2 X 2 LOW-PROFILE, FLAT PANEL SURFACE MOUNTED LED	COOPER LIGHTING	22SP3440	LED	32.8	277	4200	4000	
C	6" SURFACE MOUNTED LED DOWNLIGHT	COOPER LIGHTING	HALO # SLD612940WH-UNV-JB	LED	14.8	120	1000	4000	
H1, H1EM	18" ROUND LED LOW-BAY	MCGRAW EDISON	TT-C5-LED-E1-MQ	LED	77	277	9604	4000	PENDANT MOUNTED TO RIGID METALLIC CONDUIT FROM CEILING TO 18'-0" AFF, U.O.N.
H1A	18" ROUND LED LOW-BAY	MCGRAW EDISON	TT-C3-LED-E1-WQ	LED	45	277	5782	4000	SURFACE MOUNTED TO UNDERSIDE OF CATWALK/PLATFORM
X	EXIT LIGHT, WET LOCATION	SURE-LITES	LPXW-7-1-R-SD	LED	3.4	277	N/A	N/A	
W1	EXTERIOR AREA LIGHTING WALL PACK WITH PHOTOCELL & EMERGENCY BACKUP	U.S. ARCHITECTURAL LIGHTING	RZR-WM1-PLED-III-20LED-700MA-NW-277-RAL-9005-T-PC+277	LED	44	277	5000	4000	MOUNT FIXTURES OVER EXIT DOORS. PROVIDE FIXTURE MOUNTED PHOTOCELL.
W2, W2A	EXTERIOR AREA LIGHTING WALL PACK WITH PHOTOCELL		RZR-WM3-PLED-III-W-60LED-525MA-NW-277-RAL-9005-T-PC+277	LED	99	277	12000	4000	COORDINATE MOUNTING WITH 'A'-DRAWINGS. PROVIDE FIXTURE MOUNTED PHOTOCELL. PROVIDE EMERGENCY POWER INVERTER (LVS MODEL#CEPS-110W) FOR 'W2A' FIXTURE MOUNTED IN INTERIOR CEILING NEAR FIXTURE.
W3	EXTERIOR AREA LIGHTING WALL PACK WITH PHOTOCELL		RZR-WM1-PLED-II-20LED-350MA-NW-277-RAL-9005-T-PC+277	LED	23	277	2800	4000	COORDINATE MOUNTING WITH 'A'-DRAWINGS. PROVIDE FIXTURE MOUNTED PHOTOCELL.

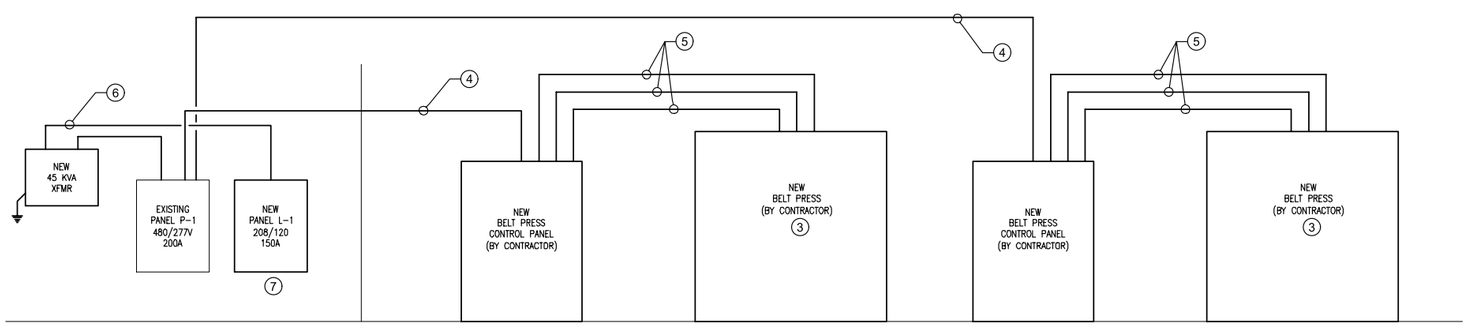

ELECTRICAL RISER DIAGRAM
No Scale

No.	DESCRIPTION	DATE	BY
1	BID SET	5/22/20	RKS
2			
3			
4			
5			
6			
7			

REVISIONS (OR CHANGE NOTICES)

Designed By: AECOM Imagine it. Delivered. One Park Square, 6501 Americas Pkwy NE, Suite 900, Albuquerque, New Mexico 87110, (505)-855-7500

Designed For: CITY OF RIO RANCHO

WASTEWATER TREATMENT PLANT 2 SOLIDS HANDLING IMPROVEMENTS

RISER DIAGRAM & SCHEDULES - ALTERNATE

EUGENE DAVID MOE, NEW MEXICO, 21369, 5-22-2020, PROFESSIONAL ENGINEER

PROJECT NO.	WW2030
DESIGNED BY:	RKS, REH
DRAWN BY:	CAM
CHECKED BY:	RKS, REH
DATE MODIFIED:	5-22-2020
DPW CHK:	

SHEET: E-7A

GENERAL NOTES:

1. EACH SIGNAL SHALL BE 2#15, UNLESS OTHERWISE NOTED.

KEYED NOTES ◯

1. PROVIDE A THREE CONDUCTOR TWISTED, SHIELDED CABLE FOR SELECTED OUTPUTS.
2. PROVIDE A TWO CONDUCTOR TWISTED, SHIELDED CABLE FOR SELECTED PUMP SPEED SIGNALS.
3. PROVIDE LCD TOUCH SCREEN AND WIRELESS TABLET CONTROL AND MONITORING.

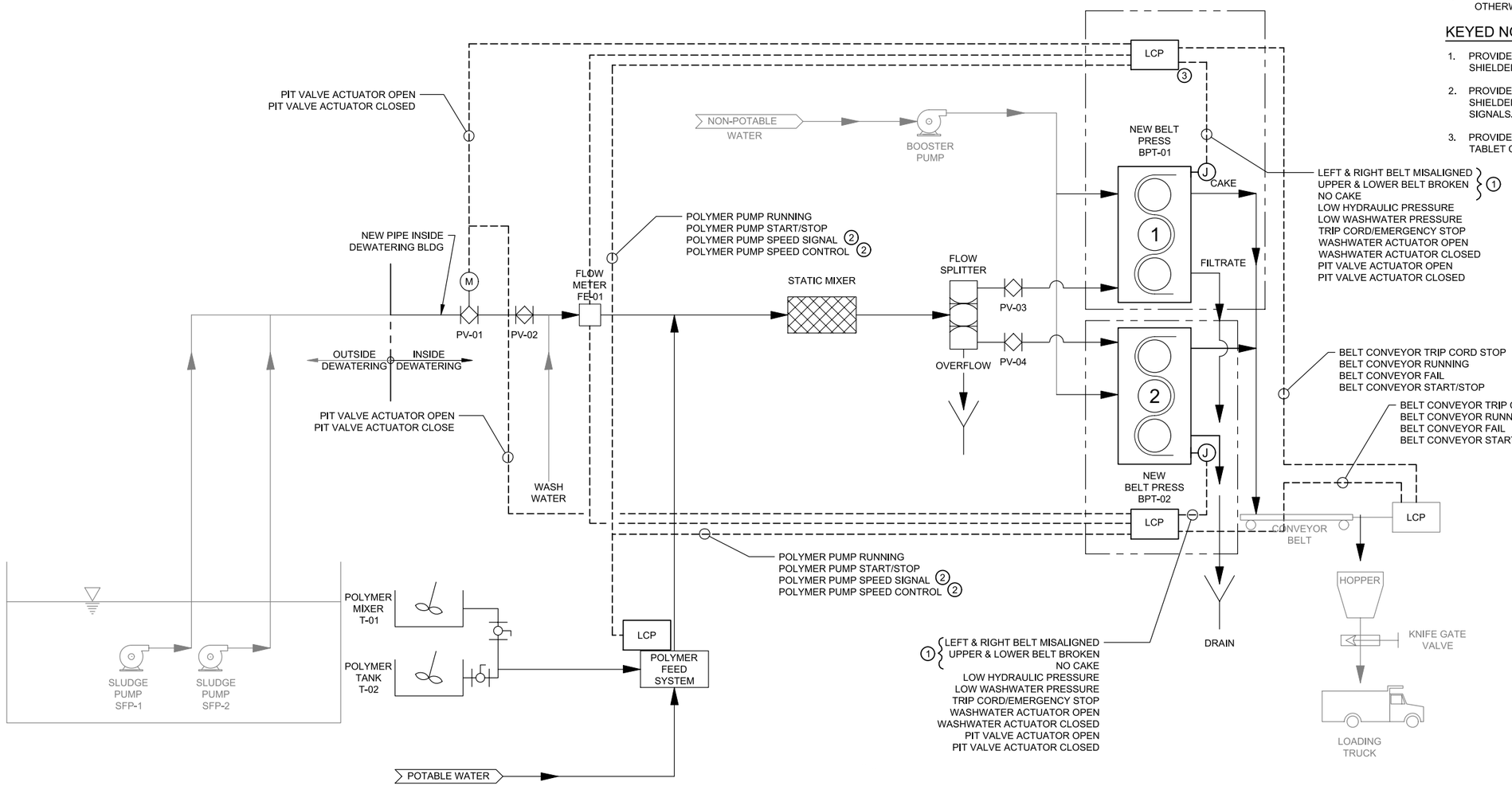

① LEFT & RIGHT BELT MISALIGNED
UPPER & LOWER BELT BROKEN
NO CAKE
LOW HYDRAULIC PRESSURE
LOW WASHWATER PRESSURE
TRIP CORD/EMERGENCY STOP
WASHWATER ACTUATOR OPEN
WASHWATER ACTUATOR CLOSED
PIT VALVE ACTUATOR OPEN
PIT VALVE ACTUATOR CLOSED

No.	DESCRIPTION	DATE	BY
1	BID SET	5/22/20	RKS
2			
3			
4			
5			
6			
7			

REVISIONS (OR CHANGE NOTICES)

Designed By: AECOM Imagine it. Delivered.
6501 America's Pkwy NE, Suite 900
Albuquerque, New Mexico 87110
(505)-855-7500

Designed For: CITY OF RIO RANCHO

WASTEWATER TREATMENT
PLANT 2 SOLIDS HANDLING
IMPROVEMENTS

CONTROL P&ID ALTERNATE

EUGENE DAVID MOE
NEW MEXICO
21369
5-22-2020
PROFESSIONAL ENGINEER

PROJECT NO.	WW2030
DESIGNED BY:	RKS, REH
DRAWN BY:	CAM
CHECKED BY:	RKS, REH
DATE MODIFIED:	5-22-2020
DPW CHK:	

SHEET: I-03A

DWG: L:\60610126 Rio Rancho - Solids Dewatering Design\300-CAD-GIS\01-CAD\20-SHEETS\I-03A.dwg USER: jessie.higgins
DATE: May 22, 2020 3:12pm XREFS: Shapes_LLaGrand_Jack_XOdgs.dwg
PLOT STYLE: AECOM Print.stb PLOTTED BY: Jessie Higgins